322 p.

LAWRENCE LIVERMORE LABORATORY
University of California/Livermore, California/94550

UCRL-51144, Rev. I

LIVERMORE PULSED SPHERE PROGRAM: PROGRAM SUMMARY THROUGH JULY 1971

C. Wong, J. D. Anderson, P. Brown,
L. F. Hansen, J. L. Kammerdiener, C. Logan,
and B. Pohl

MS. date: February 10, 1972

VAULT REFERENCE COPY

DISCLAIMER

This document was prepared as an account of work sponsored by an agency of the United States Government. Neither the United States Government nor the University of California nor any of their employees, makes any warranty, express or implied, or assumes any legal liability or responsibility for the accuracy, completeness, or usefulness of any information, apparatus, product, or process disclosed, or represents that its use would not infringe privately owned rights. Reference herein to any specific commercial product, process, or service by trade name, trademark, manufacturer, or otherwise, does not necessarily constitute or imply its endorsement, recommendation, or favoring by the United States Government or the University of California The views and opinions of authors expressed herein do not necessarily state or reflect those of the United States Government or the University of California, and shall not be used for advertising or product endorsement purposes.

This report has been reproduced
directly from the best available copy.

Available to DOE and DOE contractors from the
Office of Scientific and Technical Information
P.O. Box 62, Oak Ridge, TN 37831
Prices available from (615) 576-8401, FTS 626-8401

Available to the public from the
National Technical Information Service
U.S. Department of Commerce
5285 Port Royal Rd.,
Springfield, VA 22161

Work performed under the auspices of the U.S. Department of Energy by Lawrence Livermore National Laboratory under Contract W-7405-ENG-48.

Contents

Abstract 1

Section I. Description of Experimental Techniques 1

Introduction 1

General Remarks 2

Description of the ICT Neutron Facility 4

Characteristics of the $T(d,n)^4He$ Neutron Source 5

Angular and Energy Distribution 5

Relative and Absolute Source Strength Determination 7

Line Shape 9

Measurements of High-Energy Neutron Emission Spectra ($2\ MeV \leq E_n \leq 15\ MeV$) 13

Neutron Detectors: Pilot B and NE213 13

Description of Detector Package 13

Efficiency of Pilot B and NE213 as a Function of Neutron Energy 13

Experimental Checks of Detector Efficiency 16

Schematics of Electronics Used in the Detection of High-Energy Neutrons 17

Time Resolution 17

Time Calibration 18

Background 20

Data Processing 22

Measurements of Low-Energy Neutron Emission Spectra ($10\ eV \lesssim E_n \lesssim 1\ MeV$) 24

^6Li Glass Neutron Detector 25

Description of Detector Package 26

Measured Efficiency of ^6Li Glass as a Function of Neutron Energy 27

Calculated Efficiency of ^6Li Glass as a Function of Neutron Energy 29

Schematics of Electronics Used in the Detection of Low-Energy Neutrons 32

Time Resolution 34

Time Calibration 34

Background 34

Time-Independent Background 34

Time-Dependent Background 35

Data Processing 36

Acknowledgment 37

References 38

Section II. Compilation of Measured Low-Energy and High-Energy Time and Energy Spectra 39

LIVERMORE PULSED SPHERE PROGRAM: PROGRAM SUMMARY THROUGH JULY 1971 *

Abstract

Neutron emission spectra for spherical targets bombarded with a centered, nominal 14-MeV neutron source have been measured for many elements and compounds. These measurements have provided checks on the neutron transport codes and the input neutron cross section information. This report describes in detail the experimental technique employed and presents the spectra measured through July 1971.

Section I. Description of Experimental Techniques

INTRODUCTION

With the advent of more complex neutron transport codes it has become increasingly difficult to certify that the output from these codes is correct. Because of the large number of sources of possible error—ranging from coding errors, cross section uncertainties, scattering model approximations, and truncation of angular information—it is increasingly valuable to have detailed neutron transport measurements that are sufficiently simple to allow easy calculation and yet are detailed enough to challenge the more sophisticated features of existing calculational techniques. The pulsed sphere experiments are an attempt to satisfy this need.

In these experiments an almost isotropic source of 14-MeV neutrons is placed at the center of a spherical assembly of target material. The resulting neutron emission spectrum can be measured using time-of-flight techniques over the energy range 10 eV to 14 MeV. Between 10 eV and 1 MeV (low-energy spectra) a ^{6}Li loaded glass scintillator is used, while between 2 and 15 MeV (high-energy spectra) a Pilot B or NE 213 scintillator is used. Intensity ratios (variations in the neutron flux) larger than 10^3 are accurately measured with few or no background corrections. For some target materials, dimensions range from 0.5 to 5 mean free paths for 14-MeV neutrons. Thus neutron emission data are available for some materials over a range of

*Work performed under the auspices of the U. S. Atomic Energy Commission and DASA Subtask PE-084-01, Order No. EO-851-70.

thicknesses varying by a factor of 10, intensities varying by a factor of 10^3, and energies varying by more than 10^6 — and in an essentially one-dimensional geometry.

There are several ways in which comparisons between calculations and the pulsed sphere measurements can be made; the optimum method depends on the accuracy of the results desired. In order to achieve overall agreement to an accuracy of better than 10% over the entire emission spectrum, a large number of relatively minor details must be included. Much of Section I of this report is devoted to providing all the experimental details required for precise comparisons. However, before attempting a detailed comparison, we recommend that the reader examine the section under "General Remarks," where we present a measured high-energy emission spectrum from carbon and where we indicate the relative importance of cross sections and computational techniques in achieving agreement between calculation and experiment for different regions of this spectrum.

GENERAL REMARKS

The pulsed sphere measurements provide checks on both the neutron transport code and the input neutron cross section information. In general these two aspects cannot be separated, but they are separable when the relevant neutron cross sections are accurately known or when we are satisfied from other considerations that the neutron transport code is correct.

Figure 1 shows a 3° high-energy emission spectrum from carbon measured with a Pilot B scintillator. Carbon was chosen because the transmitted peak, elastic, discrete inelastic, and continuum inelastic emission regions are reasonably well separated; this simplifies discussion of the effects of computational techniques and cross sections on achieving agreement between calculation and measurement for different regions of the spectrum. The regions over which elastic scattering and inelastic scattering to discrete levels contribute are also indicated in Fig. 1.

The following conditions are required to achieve agreement in the transmitted peak and elastic region:

(1) Correct total and total elastic cross sections at approximately 15 MeV. The area of the transmitted peak plus elastic region is sensitive to the nonelastic cross section at this energy.

(2) Correct time resolution function. This is usually obtained from a measurement of the source neutrons with the sphere removed.

(3) The correct energy and angular distribution of the source neutrons. The location of the transmitted peak is dependent upon the source neutron energy at that angle. The flight time must be calculated relativistically since a classical calculation introduces a 2-nsec error for 15-MeV neutrons over a 10-m flight path. The region over which elastic scattering contributes is determined by the energy variation of the source neutrons as a function of angle and the energy degradation from elastic scattering on carbon. The shape of the elastic region is dependent upon the angular distribution of the source neutrons and

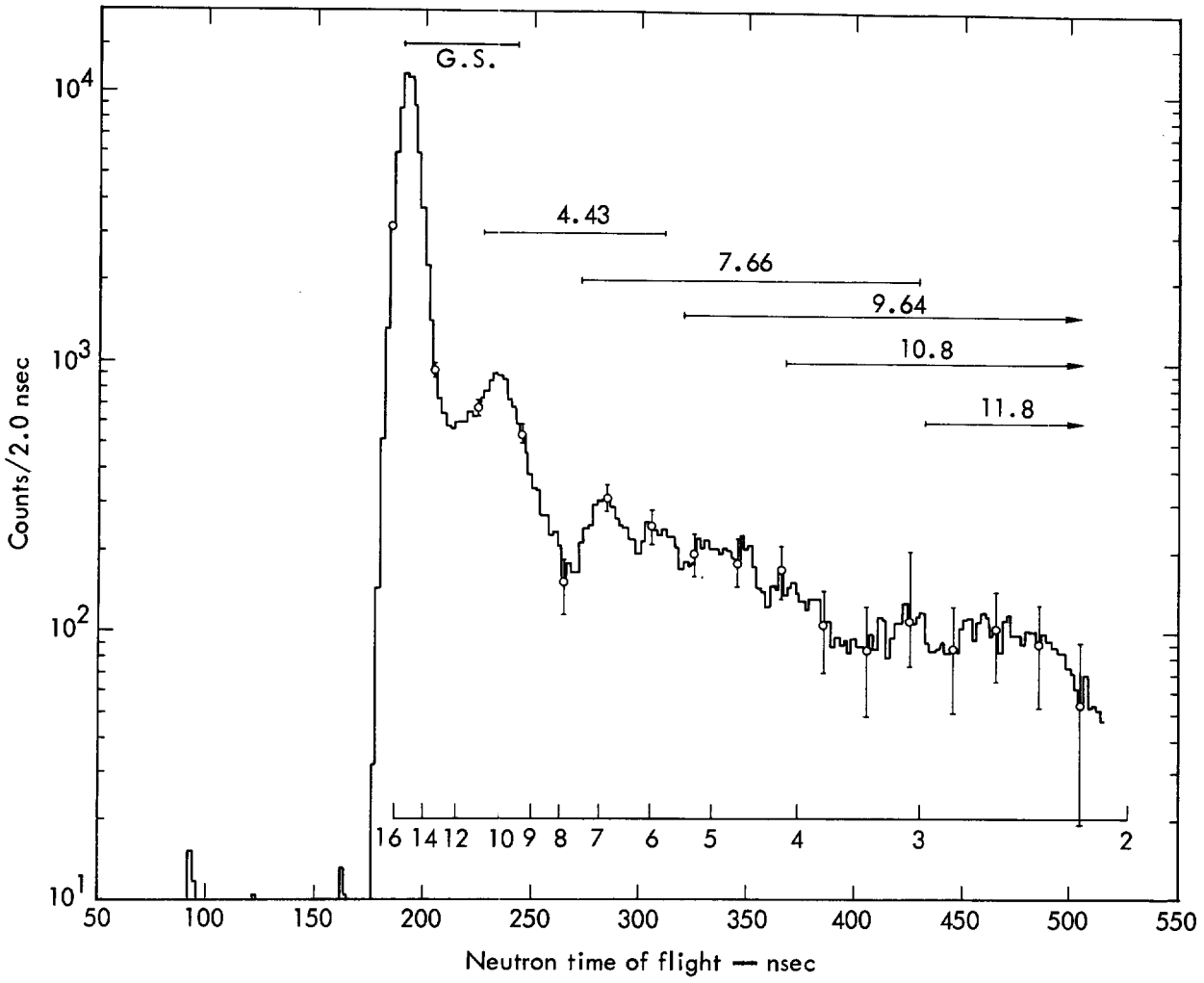

Fig. 1. Time-of-arrival spectrum from a 1.3-mfp carbon sphere. Figure is taken from Ref. 1.

the angular distribution for elastic scattering from carbon.

(4) The correct angular distribution for elastic scattering from carbon. The pronounced structure in the elastic region is due to the angular distribution for elastic scattering from carbon.

Since the inelastic cross section to the 7.66-MeV level is small, it is clear that the pronounced structure in the region attributed to the 4.43-MeV level results from the angular distribution for inelastic scattering to this level and to a lesser extent from the angular distribution of the source neutrons. Hence the following conditions are required to obtain detailed agreement in this region:

(1) The correct total inelastic cross section to this level.

(2) The correct angular distribution for inelastic scattering.

(3) The correct energy and angular distribution of the source neutrons.

(4) The correct time resolution function.

(5) The correct total cross section as a function of neutron energy in this region.

The low-energy emission spectra and also the continuum region of the high-energy emission spectra are populated mainly from inelastic scattering to the continuum. Since inelastic scattering to the continuum is usually isotropic and is not strongly dependent upon the incident neutron energy between 13 and 15 MeV, it is sufficient to input an isotropic and isoergic source. Therefore, in order to obtain agreement in this region of the high-energy and low-energy spectra, we must have:

(1) The correct inelastic scattering cross section to the continuum region.

(2) The correct total cross section as a function of energy for neutrons in this energy region.

The pulsed sphere measurements yield a time-of-arrival spectrum that is not identical with the customary time-of-flight spectrum because of the finite size of the spherical targets. Nevertheless, approximate energy spectra were generated from the time-of-arrival spectrum by assuming that all interactions occur at the center of the spheres, i.e., by assuming a flight path equal to the detector-to-tritium target distance. This is not a bad assumption, especially for the smaller spheres. However, for the larger spheres and for regions of pronounced structure, comparisons must always be carried out using the time-of-arrival spectrum.

DESCRIPTION OF THE ICT NEUTRON FACILITY

The $T(d,n)^4He$ reaction is used as a nearly isotropic source of 14-MeV neutrons. 400-keV D^+ ions are accelerated by the Livermore ICT (Insulated Core Transformer) accelerator and impinge upon a tritium-loaded titanium target located approximately at the center of a cubical 40-ft target pit. The target pit incorporates a low-mass aluminum floor to minimize the scattering of the primary neutrons; holes were drilled into the target pit walls in order to accommodate collimators that shield the detectors from the target pit background. The facility has the capability of providing a pulsed neutron source sufficiently variable in pulse width, frequency, and intensity to be ideally suited to a wide range of experiments.

For the high-energy emission spectra measurements, the rf ion source (peak current 700 μA) is employed. Lissajou sweeping in the ICT terminal produces a 2.5-MHz pulsed deuteron beam with a pulse width varying between 15 and 75 nsec. After acceleration to 400 keV, the beam enters a 10-MHz rf buncher that bunches the beam down to approximately a 2-nsec time width. This width is measured employing either the γ-rays from the tritium-titanium target or the inelastic γ rays from a small sphere. For the low-energy emission spectra measurements, the Duo-Plasmatron Ion Source (peak current 10 mA) is employed. Arc pulsing of the source produces a 1- to 10-kHz pulsed deuteron beam variable in width between 6 and 100 μsec. After being accelerated to 400 keV, the pulsed beam enters a vertical multiplate sweeper that reduces the pulse width from 6 to 100 μsec down to between 25 nsec and 20 μsec. The neutron production rate (n/sec) can be calculated from the peak dc current, the duty factor, and the neutron yield of approximately 2.5×10^{-5} neutrons/deuteron. However, for the pulsed sphere

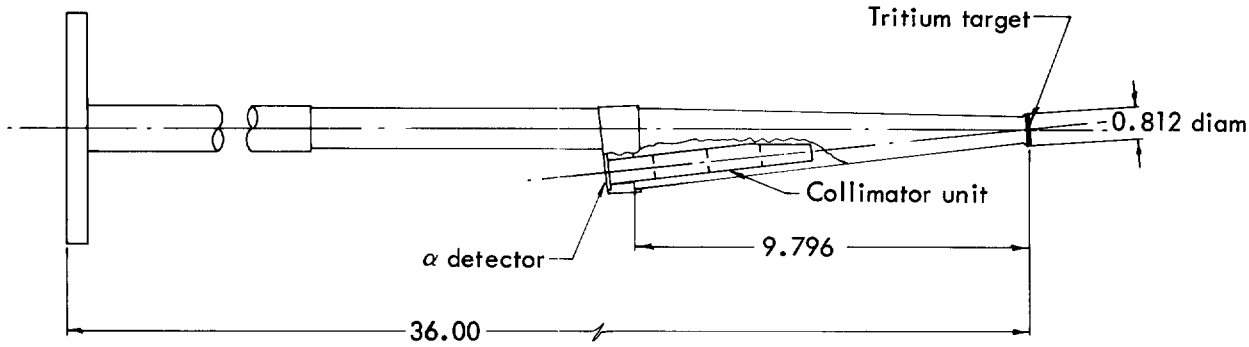

Fig. 2. Tritium target low-mass assembly. Indicated dimensions are in inches.

measurements the neutron yield was determined using a solid-state alpha detector.

Figure 2 shows the low-mass target assembly. The solid-state alpha detector location and the tritium target are visible. The tritium-titantium target backing is a tungsten disk 2.06 cm in diameter by 0.051 cm thick. The evaporated titanium thickness is approximately 4 mg/cm^2, and the volume of absorbed tritium is approximately 3 cm^3 at STP.

Figure 3 shows the collimator and detector assembly schematic. The collimator face was aligned with the target pit wall. The collimator was constructed from iron and borated paraffin and was placed in a 31-cm-diam hole in the target pit wall. Three sets of collimator inserts were built to accommodate the entire range of sphere sizes. The criterion used was that with the particular collimator set, the detector should view the entire sphere. The collimator shown in Fig. 3 is the one used with the intermediate spheres. The high-energy pulsed sphere measurements utilized holes at 30° and 120° with the appropriate collimator assembly. Some of the low-energy measurements were carried out at 26° with respect to the deuteron beam line. Here the collimation was a 20-cm hole in the 2-m-thick concrete pit wall. The detector was supported by strings in the center of a large enclosure in order to minimize counts due to outscattering of the primary flux (mainly 14-MeV) by the detector assembly and subsequent inscattering at later times due to materials surrounding the detector. However, the bulk of the low-energy measurements and the intercalibration of the ^{6}Li glass detector with a ^{235}U fission chamber were carried out using the collimated holes at 30°, 60°, and 120°. These latter measurements were not corrected for the outscatter-inscatter effect. (See the section on "Calculated Efficiency of ^{6}Li Glass as a Function of Neutron Energy" for a discussion of the outscatter-inscatter effect on the efficiency determination and the section on "Time-Dependent Background" for a similar discussion with respect to the low-energy pulsed-sphere measurements.)

CHARACTERISTICS OF THE T(d,n)^{4}He NEUTRON SOURCE

Angular and Energy Distribution

The T(d,n)^{4}He reaction below 400-keV deuteron energy is isotropic in the

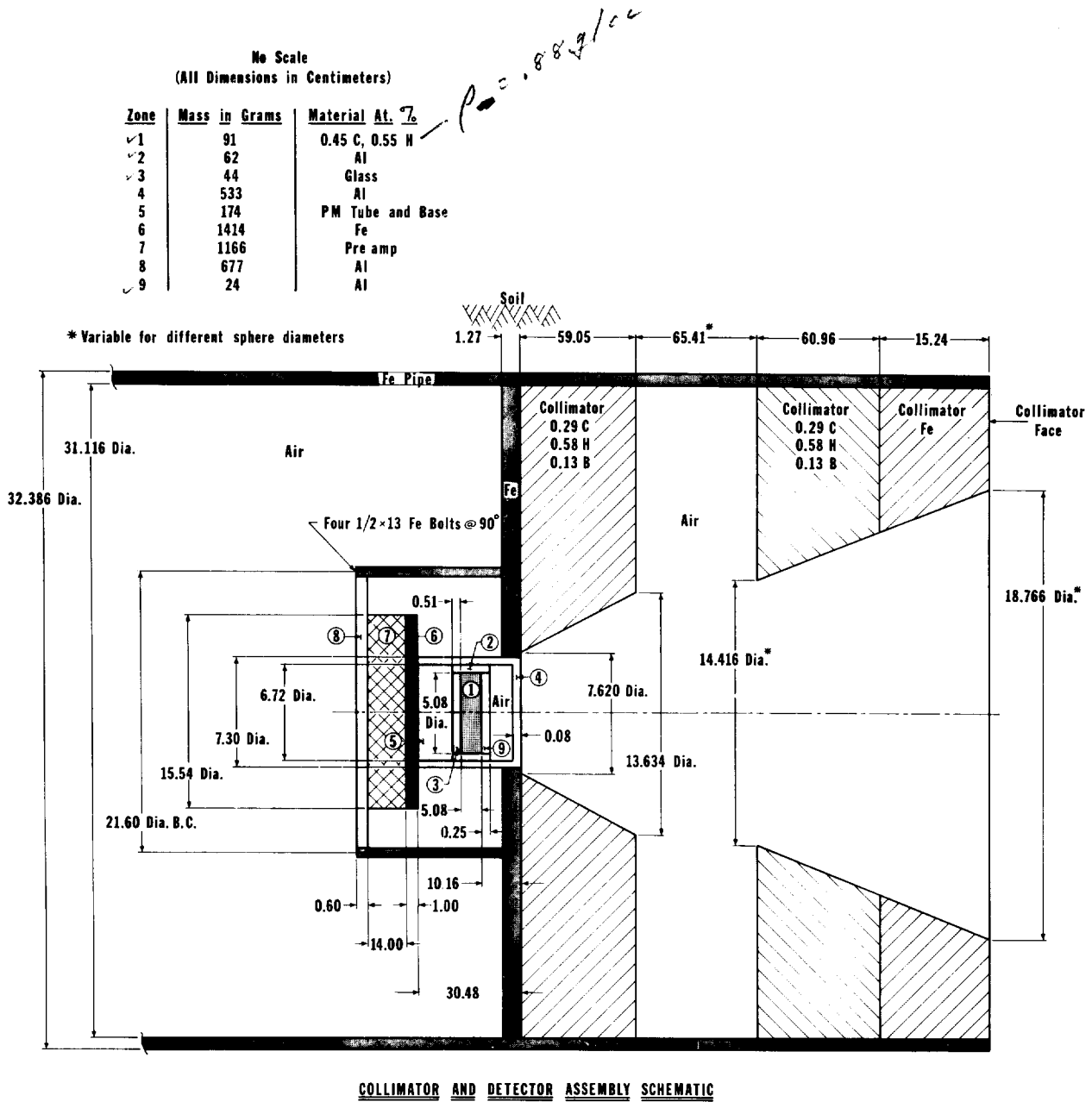

Fig. 3. Collimator and detector geometry used in calculating line shape effects and time-dependent, neutron-induced background.

center-of-mass system. The anisotropy in the source neutrons arises from the center-of-mass to laboratory transformation and from 90° edge absorption in the tungsten disk. The previously published[1] flux distribution for the source was measured on the 90-in. cyclotron employing a D_3^+ third-harmonic beam. The bombarding energy was in excess of 500 keV, and the most probable reaction energy was estimated to be 260 keV from a measurement of the energy dependence with angle of the source neutrons. A similar measurement for 400-keV bombarding energy on the ICT indicated that the most probable reaction energy was 200 keV. It should be mentioned that the most probable reaction energy is determined by the bombarding

energy, the energy dependence of the $T(d,n)^4He$ cross section, the rate of energy loss in the tritium-titanium target, and the tritium loading as a function of depth. The fact that the most probable reaction energy is much higher than the $T(d,n)^4He$ reaction resonance energy of 100 keV may reflect the nonuniform loading of the tritium in the titanium and the increase of dE/dx with lower energy. Figure 4 presents the neutron energy as a function of angle for 400-keV bombarding energy. As already mentioned, the data is consistent with a most probable reaction energy of 200 keV. Figure 5 presents the angular distribution calculated for 200 keV uncorrected for tungsten absorption. Tungsten absorption can be ignored since the pulse sphere measurements are not carried out at 90° and since it has a negligible effect on the total number of emitted source neutrons. For convenience the data shown in Figs. 4 and 5 are also presented in Table 1. Figure 4 and Table 1 assume the source to be isoergic in a specific direction, which is not correct. The energy spread is a minimum around 90° and a maximum at 0°. However, it is convenient and sufficiently accurate to include this energy spread in the time resolution function. We have therefore included the energy spread in the full-width half maximum (FWHM) of the Gaussian time resolution function given with each data set in Section II.

Table 1. Tabulation of the data in Figs. 4 and 5.

Angle (deg)	Energy (MeV)	Intensity
0	15.11	1.00
5	15.10	1.00
10	15.09	1.00
15	15.07	1.00
20	15.04	1.00
25	15.01	0.99
30	14.97	0.99
35	14.92	0.99
40	14.87	0.98
45	14.81	0.98
50	14.75	0.98
55	14.68	0.97
60	14.60	0.97
65	14.53	0.96
70	14.45	0.96
75	14.37	0.95
80	14.29	0.95
85	14.20	0.94
90	14.12	0.94
95	14.04	0.93
100	13.95	0.92
105	13.87	0.92
110	13.80	0.91
115	13.72	0.91
120	13.65	0.90
125	13.58	0.90
130	13.52	0.90
135	13.46	0.89
140	13.41	0.89
145	13.36	0.88
150	13.32	0.88
155	13.28	0.88
160	13.25	0.87
165	13.23	0.88
170	13.21	0.87
175	13.20	0.87
180	13.20	0.87

Relative and Absolute Source Strength Determination

A thin silicon solid-state detector, placed 174° to the D^+ beam line, monitors the relative neutron production by counting the associated ^4He particles during each run. Since the high-energy pulsed sphere measurements are essentially transmission experiments (i.e., $\frac{I}{I_0}$, the ratio of intensities with and without the spherical targets), the only requirement is a relative monitor of the neutron production. In other words, the sphere-in and sphere-out measurements must be for the same neutron production (same

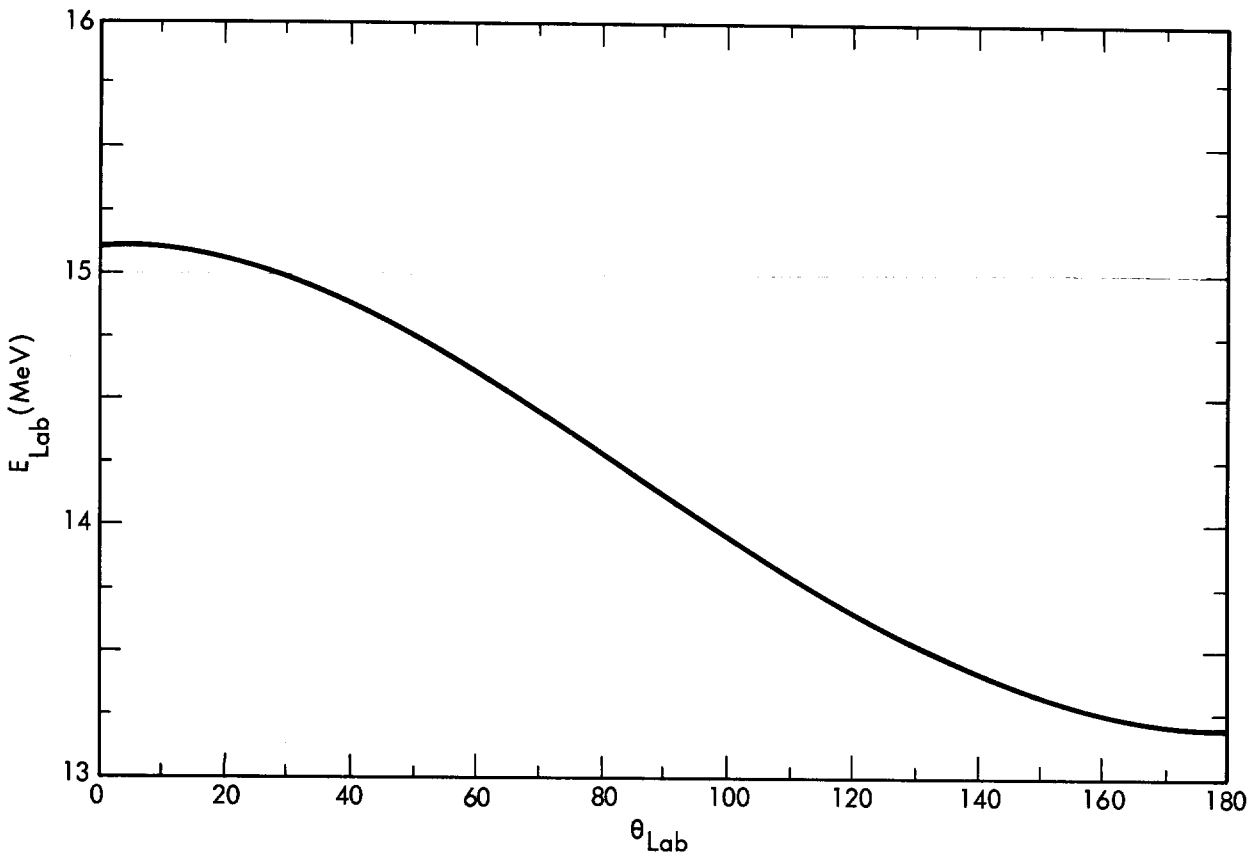

Fig. 4. Variation of the most probable energy with angle of the $T(d,n)^4He$ source neutrons.

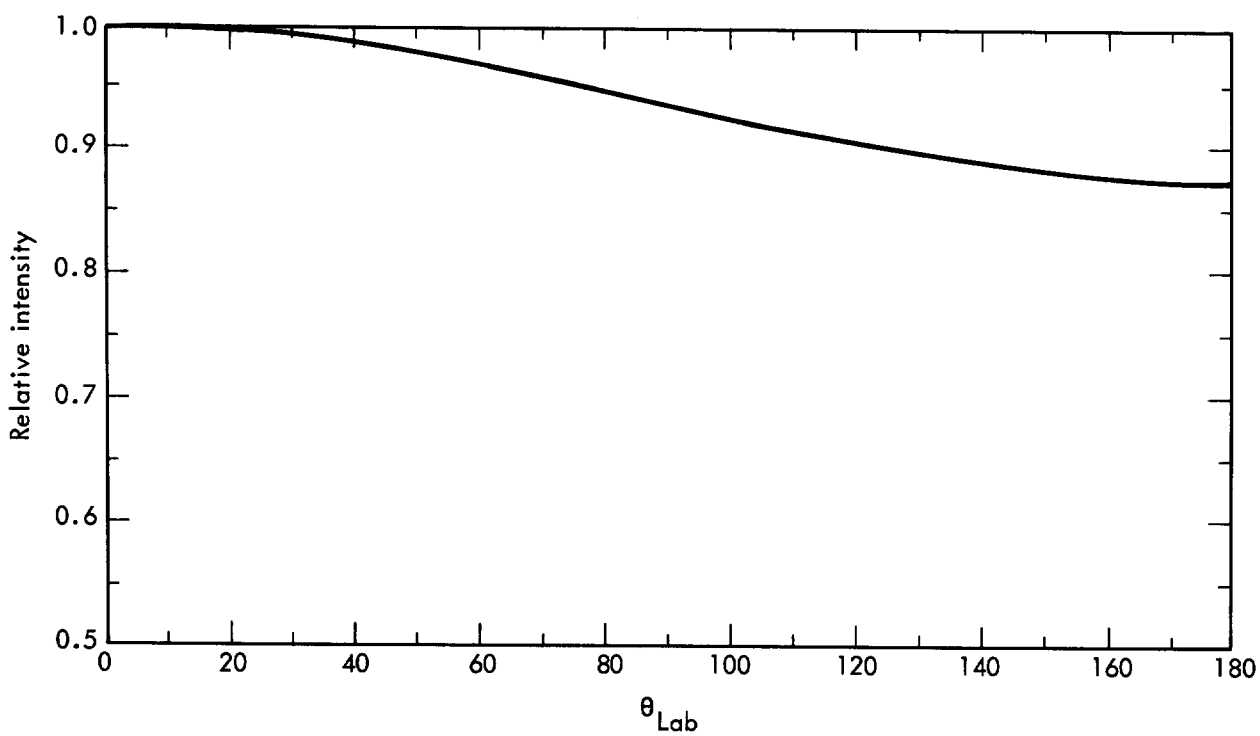

Fig. 5. Calculated angular distribution of the source neutrons. The most probable reaction energy was 200 keV.

^{4}He counts), the absolute neutron production being unimportant. In practice the sphere-out measurements, being run for fewer ^{4}He counts, were normalized to the ^{4}He counts for the sphere in measurements. $\frac{I}{I_0}$ has units of neutron counts per nsec divided by total 14-MeV counts with the sphere removed. Using the relative detector efficiency as a function of neutron energy and the angular distribution of the source neutrons, $\frac{I}{I_0}$ can be converted to neutrons per nsec per source neutron. Hence neutrons per nsec per source neutron can be measured without knowing either the absolute neutron production or the absolute detector efficiency.

The low-energy measurements utilize the ^{6}Li(n,α)T reaction, which is exothermic (Q = +4.8 MeV). To minimize gamma ray counts, a pulse-height window is put on the alpha-plus-triton recoil peak such that neutrons above 1 MeV are not detected through the ^{6}Li(n,α) reaction. Therefore the effective efficiency for detecting 14-MeV neutrons by the (n,α) reaction is zero, and hence a sphere-out measurement is not taken—as is the case with the high-energy measurements. To obtain the neutrons per nsec per source neutron, the absolute neutron production must be known. The absolute neutron production is obtained by independently calibrating the alpha counter against a Pilot B or NE213 detector whose absolute efficiency is known. In this way the quantity neutrons per steradian per alpha is determined. Using the known angular distribution, the quantity source neutron per alpha can be generated. The low-energy measurements therefore require the absolute neutron production and the absolute ^{6}Li glass detector efficiency.

Line Shape

The time and energy spreads of the neutron source itself have been thoroughly investigated. The following sources of energy and time spreads have been considered:

(1) Time dependence of the D^+ ion beam.
(2) Energy spread induced by D^+ ion energy loss in the tritium-titanium target.
(3) Neutron scattering in materials near the neutron source.
(4) Neutron scattering in air.
(5) Neutron scattering in materials near the detectors.
(6) Time spread due to electronics and detector size.

Time and energy spreads resulting from (1), (2), and (6) above are the major effects. They combine to yield a nearly Gaussian time resolution function. This spread has been estimated for each experiment and is represented by the quoted FWHM for each data set. The FWHM time spread for each sphere run can be inferred from the corresponding 14-MeV neutron time peak with the sphere removed, providing there is no change in bunching between the sphere-in and sphere-out runs.

Item (1) is measured utilizing the gamma rays from a small sphere. Item (2) is a minimum at about 90° and a maximum at 0°. The time spread in item (6) is caused mainly by the transit time of 14-MeV neutrons through the 2-in. scintillator and amounts to 1 nsec. Most of the mass near the neutron source is represented by the idealized low-mass target assembly shown in Fig. 6. Calculations based on this assembly,

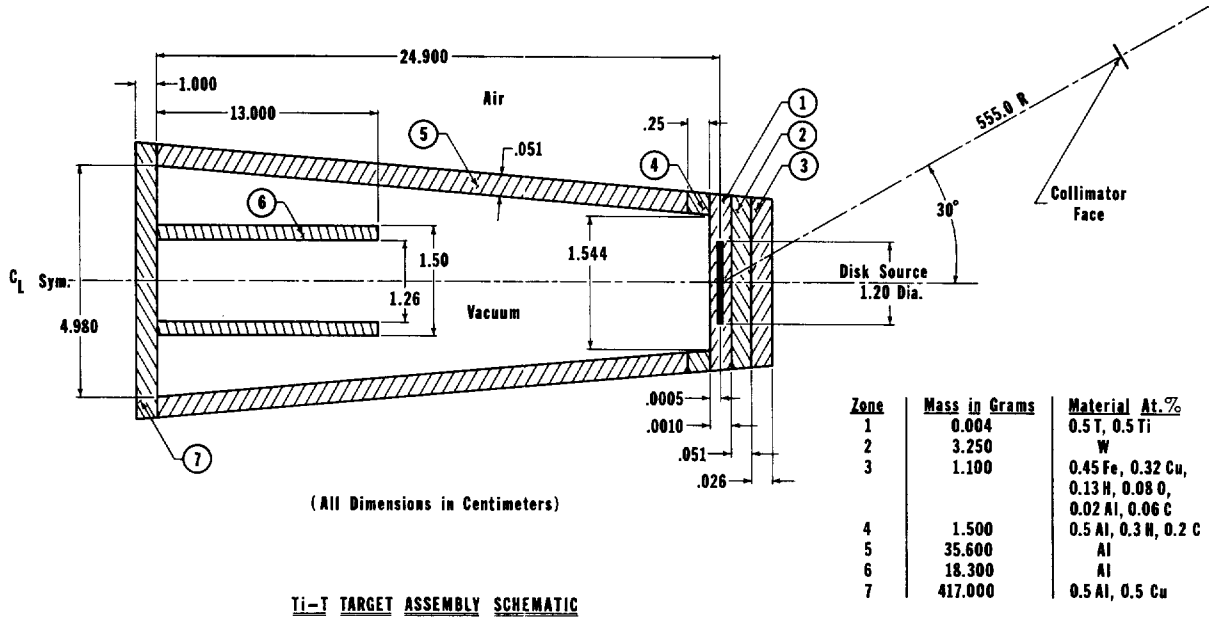

Fig. 6. Idealized target assembly used to calculate line shape effects.

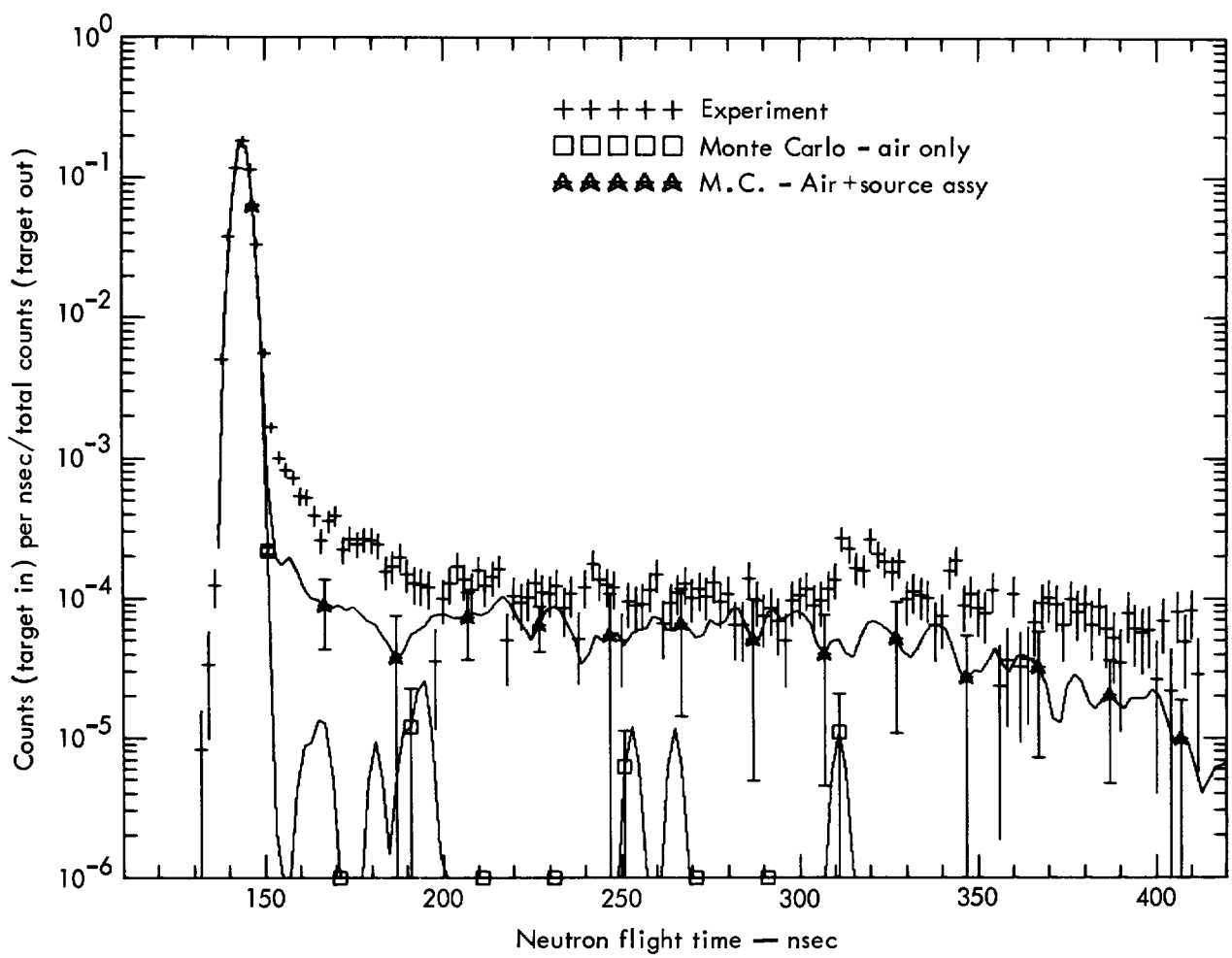

Fig. 7. Monte Carlo calculation of air and target assembly scattering.

surrounded by air, were made and are compared with an experimental blank run in Fig. 7. Also shown in Fig. 7 is a calculation that shows that air scattering only attenuates the direct flux and has negligible effect on the line shape. The count rate in the "tail" is $\leq 10^{-4}$ of the direct peak.

The effects of the collimator on the resolution function were investigated analytically using the idealized collimator set shown in Fig. 3. This represents most of the mass near the detector. The time spread of an isoergic 15-MeV source distributed uniformally across the collimator entrance and coaxially with the collimator is shown in Fig. 8. Time spreads due to collimator and target assembly are folded together and shown in Fig. 9. Good agreement with the experimentally observed sphere-out spectrum provides evidence that the observed line shape is well understood.

In summary, a Gaussian line shape is acceptable for calculation of spectra that show structure much less pronounced than the sphere-out spectra (see Fig. 9). Flux changes in the emission spectra from thin ($\leq$ 1 mfp) targets of heavy materials ($A \geq 50$) are too rapid to be represented by a Gaussian line shape alone in the direct reaction region (8 to

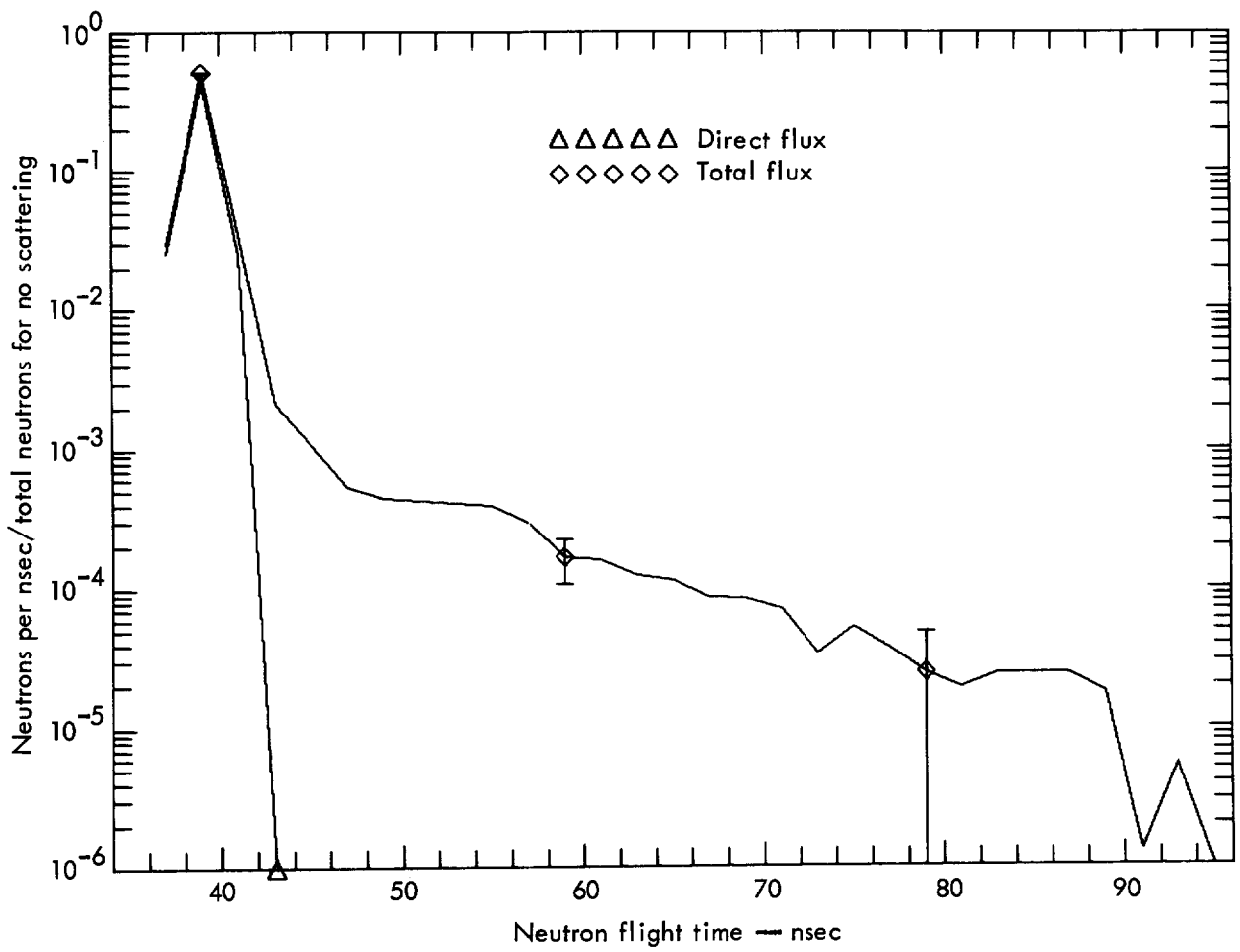

Fig. 8. Monte Carlo calculation of collimator streaming effects.

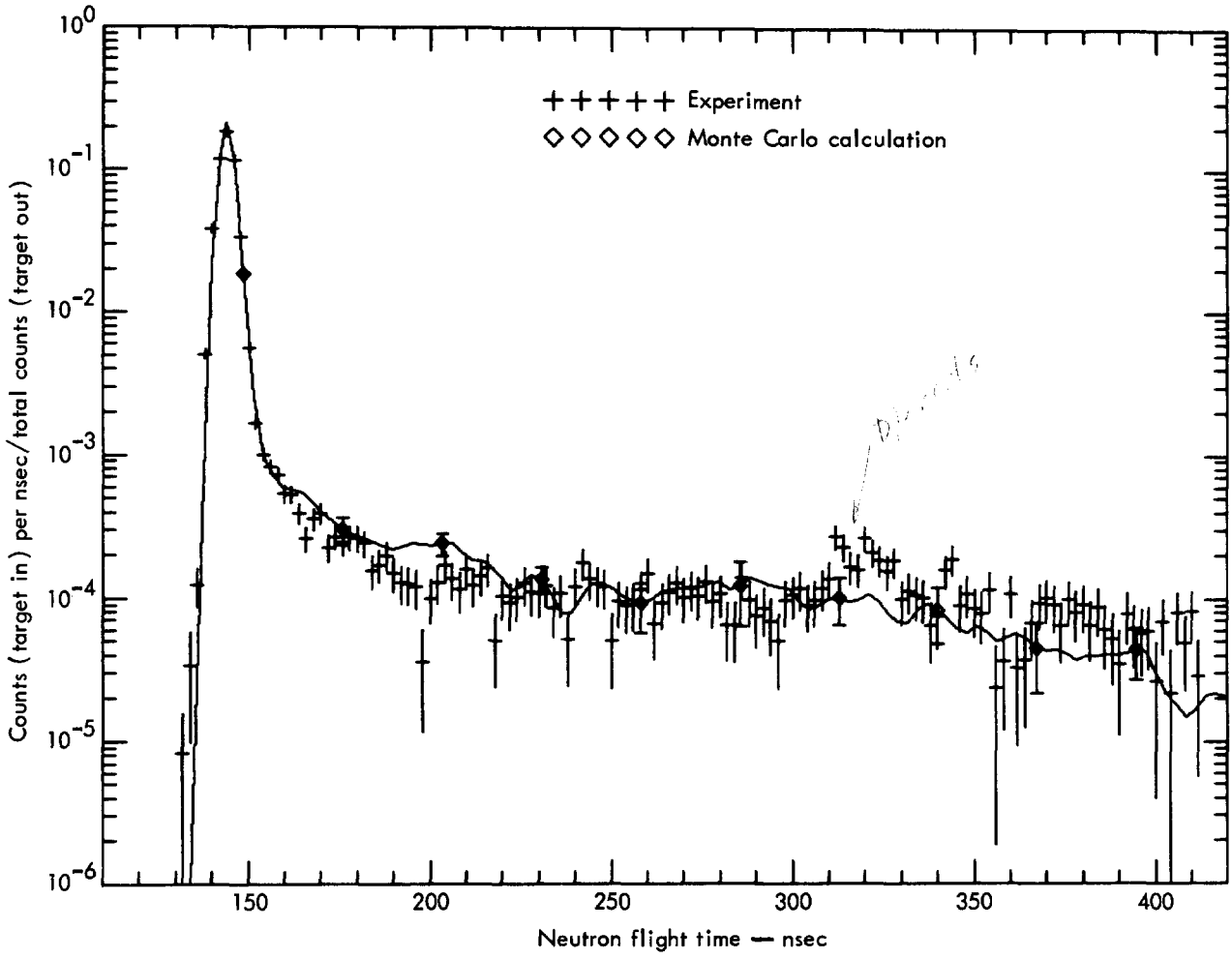

Fig. 9. Comparison of measurement with calculation of target assembly and collimator scattering. d+d buildup neutrons are evident at a flight time of approximately 315 nsec.

12 MeV). In these cases, the contribution from the high-energy inelastic scattering is comparable to the tail produced from scattering from the target assembly and collimator. Hence, for these cases, the collimator and target assembly must be included in a comparison of calculation with experiment. It should be emphasized again that we are considering very specific cases, namely measurements carried out on the smallest spheres of heavy materials utilizing the smallest collimation. Obviously, collimator scattering is much less important for the larger spheres.

As mentioned above, air scattering attenuates I_0, the intensity of the 14-MeV peak. Since the high-energy pulsed sphere measurements are transmission experiments, i.e., I/I_0 determinations, the same attenuation is present in I at 14 MeV and hence I/I_0 at 14 MeV is unaffected by air scattering. Since the nitrogen and oxygen total and nonelastic cross sections do not vary rapidly between 2 and 14 MeV, I/I_0 is also essentially unaffected by air scattering at other energies. Therefore, in calculating I/I_0 a vacuum environment can be assumed.

MEASUREMENTS OF HIGH-ENERGY NEUTRON EMISSION SPECTRA
(2 MeV $\leq E_n \leq$ 15 MeV)

Neutron Detectors: Pilot B and NE213

Description of Detector Package

The detector package is shown in Fig. 10. The location of the detector package with respect to the collimator assembly is shown in Fig. 3. (Note that the collimator and detector packages are not drawn to scale.) The construction of the NE213 scintillator is shown in Fig. 3. The 5.08-cm diam × 5.08-cm-long liquid scintillator is encased in an aluminum can which is sealed with a 0.51-cm-thick glass plate. The 5.08-cm-diam × 5.08-cm-long Pilot B scintillator is coupled to a 8575 RCA photomultiplier tube with a 2.54-cm-long lucite light pipe. The scintillator and light pipe are covered with aluminum foil, and this assembly—including the photomultiplier tube—is then covered with black electrical tape.

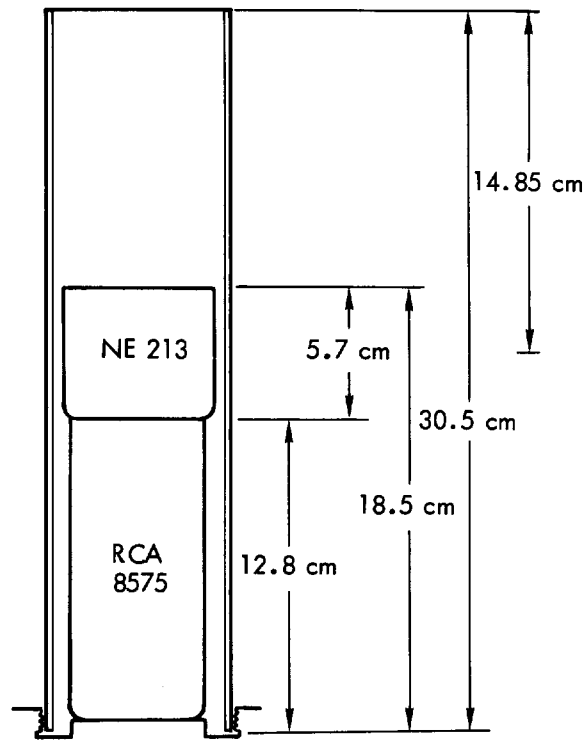

Fig. 10. Schematic drawing of the detector package for the high-energy emission spectra measurements.

Efficiency of Pilot B and NE213 as a Function of Neutron Energy

The neutron detection efficiencies of Pilot B and NE213 at high and low ^{22}Na biases are presented in Figs. 11 through 14. High and low ^{22}Na bias settings are defined as the Compton recoil edges of the 1.28-MeV and 0.51-MeV γ rays from a ^{22}Na source. Therefore, the equivalent electron bias energies are 1.07 and 0.34 MeV, respectively. The following steps were involved in arriving at the efficiencies shown in Figs. 11 through 14:

(1) A calculation of the probability of an (n,p) interaction using the total cross sections of carbon and hydrogen with the neutrons incident along the axis of the 5.08 × 5.08-cm diam cylinder. Multiple collisions with hydrogen are not calculated.

(2) A calculation of the probability of scattering off carbon to all orders and then subsequently an (n,p) interaction. To yield a simple analytic expression, the cylinder is deformed into a sphere and carbon elastic scattering is assumed isotropic with no elastic energy degradation. This calculation, more fully described in Ref. 2, involves approximations that are deemed not serious since it is, at most, a 10% correction term in the total efficiency.

(3) Since (n,p) scattering is essentially isotropic in the center-of-mass

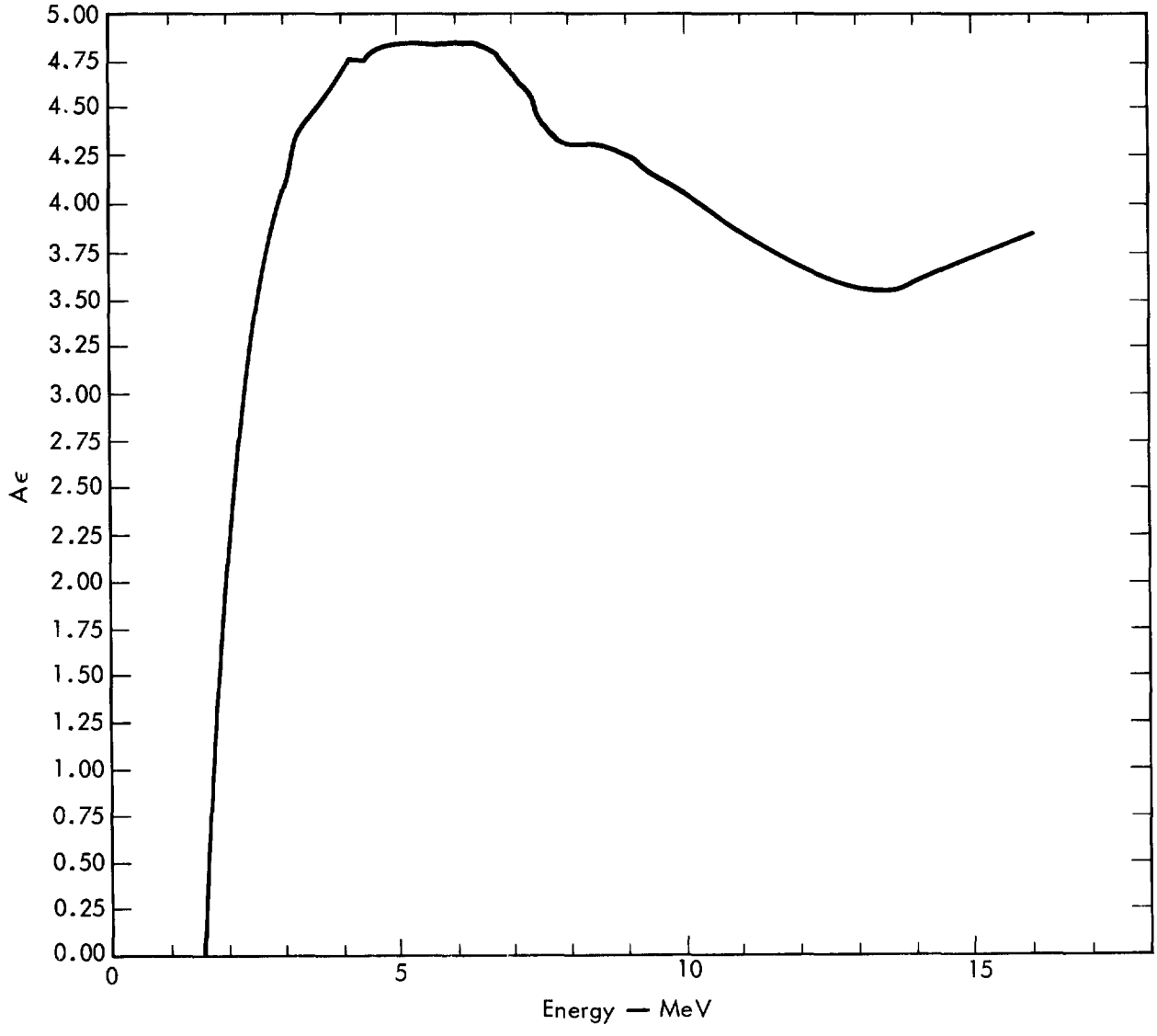

Fig. 11. Pilot B efficiency for low ^{22}Na bias. Efficiency is expressed as $A\epsilon$, where A is the area of the detector in cm^2 and ϵ is the probability of detection.

system, the laboratory recoil energy distribution is flat. Thus the detection efficiency is the probability calculated in (1) and (2) multiplied by $\frac{E_n - E_B}{E_n}$, where E_n is the incident neutron energy and E_B is the neutron bias energy. The equivalent neutron energy biases have been determined by B. A. Pohl et al.[3] For high and low ^{22}Na bias settings we use:

	High ^{22}Na bias	Low ^{22}Na bias
Pilot B	3.5 MeV	1.6 MeV
NE213	3.5 MeV	1.6 MeV

(4) Measurements and estimates of the ^{12}C(n,3α) contribution to the detector efficiency. Since the ^{12}C(n,3α) reaction proceeds mainly via ^{12}C(n,n')^{12}C* (9.6-MeV) and higher states, the (n,3α) reaction contributes only above about 10.4 MeV

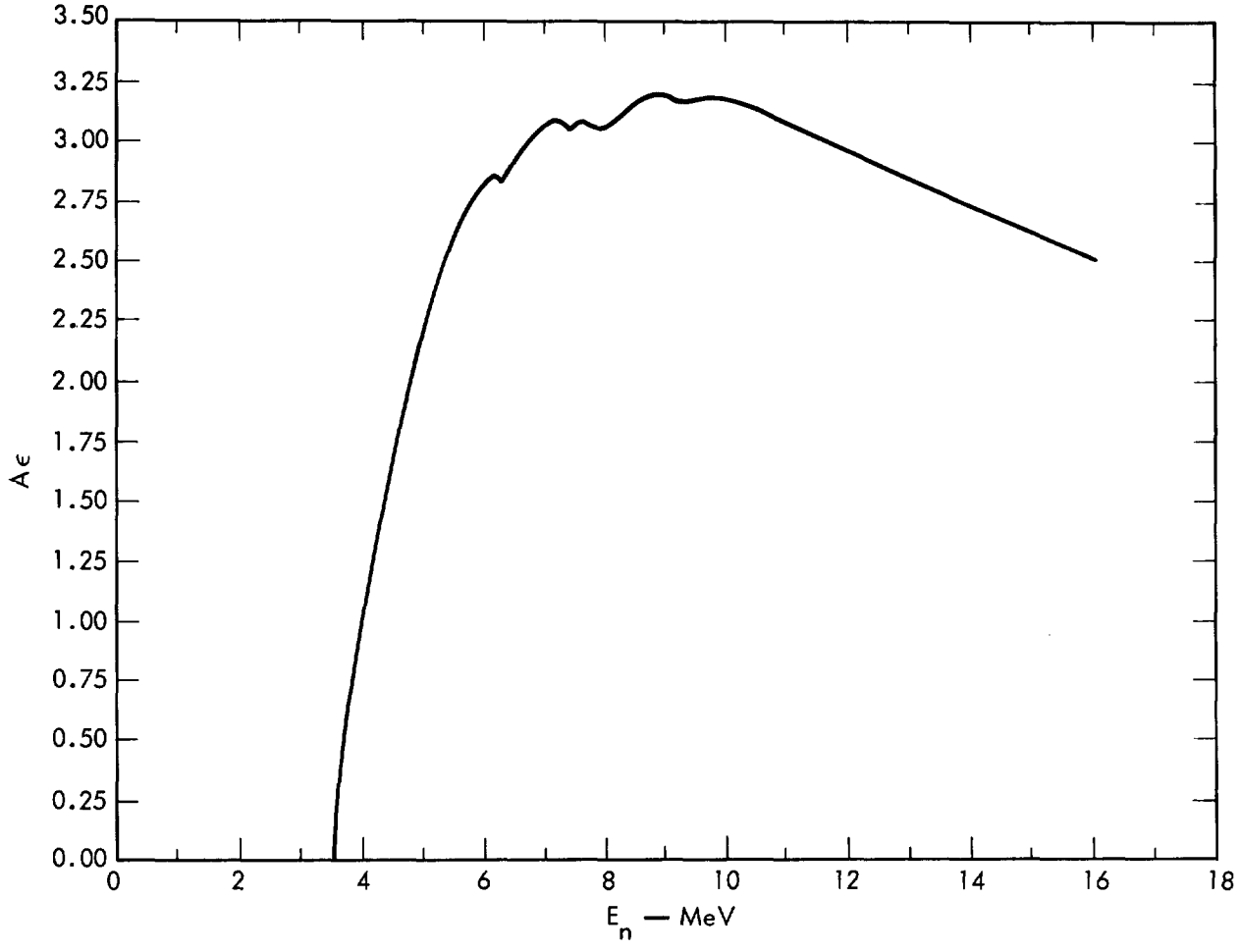

Fig. 12. Pilot B efficiency for high ^{22}Na bias.

neutron energy. The direct three-body breakup (Q = -7.3) is small, and in any case the light output from the direct three-alpha breakup is below the low ^{22}Na bias up to an incident neutron energy of approximately 10 MeV. In addition, from light output considerations, the $^{12}C(n,3\alpha)$ reaction only contributes to the detector efficiency above 10.4 MeV at low ^{22}Na bias. The contribution at 13.6 and 15 MeV was measured using the 30° and 120° holes by comparing counts for high and low ^{22}Na biases for the same neutron production. (Also see Ref. 3.) The contribution between 10.4 and 13.6 MeV was estimated by means of a smooth extrapolation (see Figs. 11 and 13).

(5) Measurements and estimates of the $^{12}C(n,n'\gamma)^{12}C^*$ (4.43-MeV) contribution to the Pilot B detection efficiency. Utilizing the NE213 and pulse shape discrimination, it is estimated that at 15 MeV the Pilot B efficiency should be increased by 4.4%. Between threshold (4.8 MeV) and 15 MeV for high ^{22}Na bias and between threshold and 10.4 MeV for low

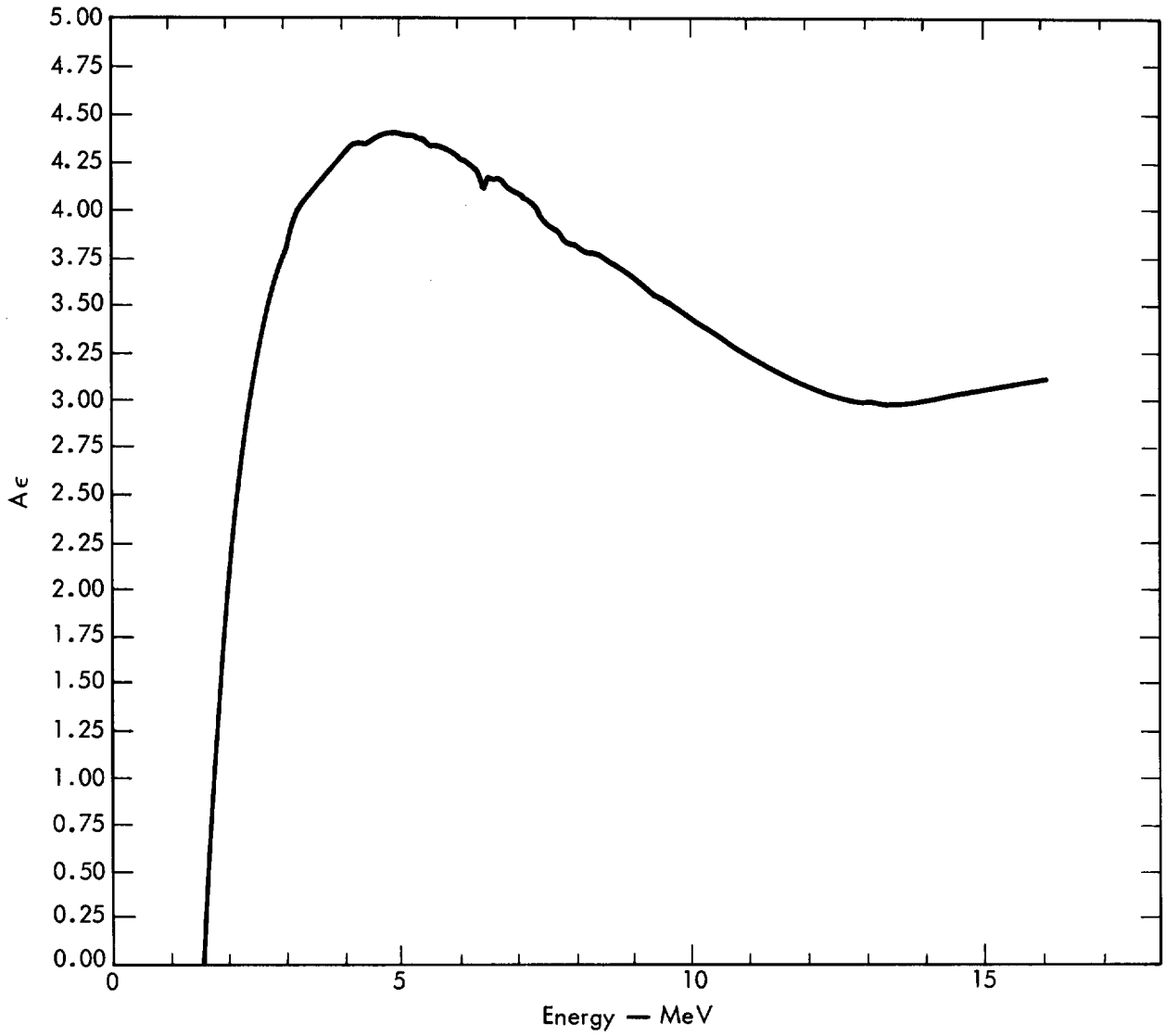

Fig. 13. NE213 efficiency for low ^{22}Na bias.

^{22}Na bias, the 4.43-MeV gamma ray contribution was estimated using the energy dependence of the cross section for exciting the 4.43-MeV level.

Experimental Checks of Detector Efficiency

The Pilot B efficiency for high and low bias was calculated for a 2.54 × 2.54-cm scintillator as described above and then measured employing (p + t) and (d + d) neutrons. From this comparison it was estimated that the absolute accuracy of the calculated efficiencies shown in Figs. 11 through 14 is ±7%. For pulsed-sphere measurements, only the shape of the efficiency curve is important. The error on the relative shape is estimated to be ±4%.

Pulsed-sphere measurements were made employing Pilot B and NE213 at both biases. In general there was good agreement, showing that the relative shapes of the Pilot B and NE213 efficiency curves are correct and that the ratios of

efficiency for Pilot B and NE213 are correct.

Schematics of Electronics Used in the Detection of High-Energy Neutrons

The schematic diagram of the electronics used for the high-energy experiments is shown in Fig. 15. Two detectors were used to allow simultaneous collection of data at different angles. Routing pulses derived from the slow outputs of these detectors sorted the data into corresponding subgroups of the PDP-8i external memory. The start pulses were produced by a fast tunnel diode trigger at the anode of each photomultiplier tube. Stop pulses were generated by a capacitive pickoff located in front of the target. An f/2 divider is used to eliminate alternate stop pulses, resulting in a double display of the data (see Fig. 16(a)).

Figure 15 describes the electronics used when employing two NE213 scintillators. For two Pilot B detectors, however, the pulse shape discrimination network is not used. The electronics of Fig. 15 can easily be rearranged to accommodate one Pilot B and one NE213 detector, or one NE213 detector in which the neutron and gamma spectrum are measured simultaneously.

Time Resolution

In order to accurately compare measurements and calculations in regions of pronounced structure, the correct time resolution function must be folded into the calculations. The time resolution function has already been discussed in great detail under the heading "Line Shape," including the origin of the Gaussian time resolution function and the manner in which the FWHM is determined for each data set in Section II. Use of this purely Gaussian time resolution function is adequate for most of the spheres listed

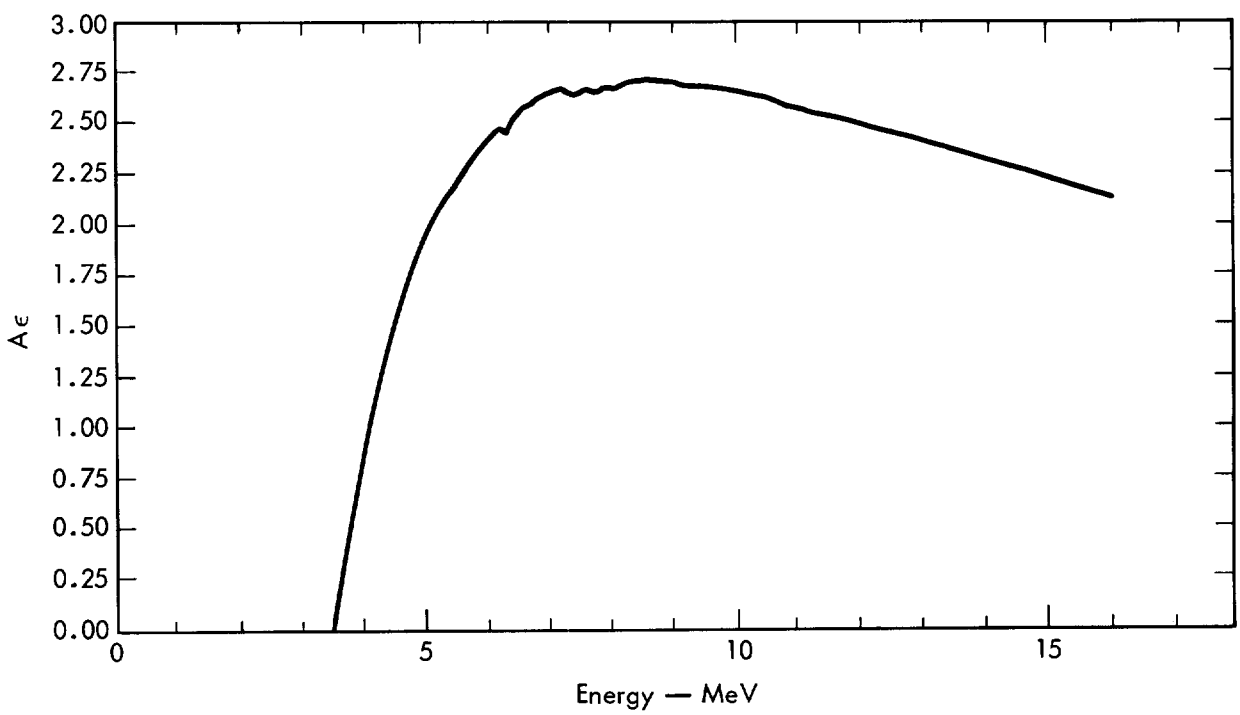

Fig. 14. NE213 efficiency for high ^{22}Na bias.

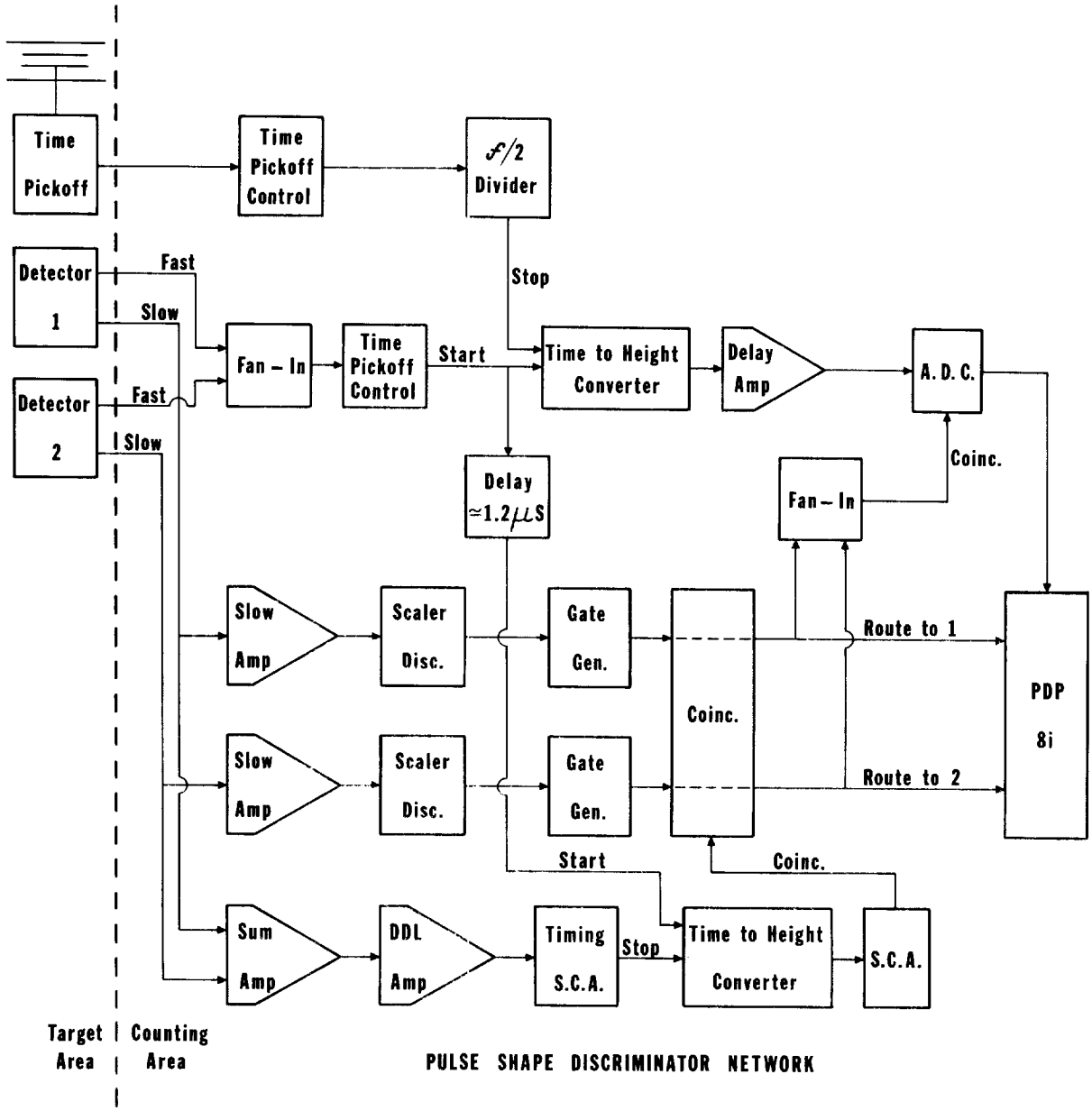

Fig. 15. Time-of-flight electronics for the high-energy emission spectra measurements.

in Section II. However, as discussed earlier, a low-energy tail must be added to the Gaussian resolution function for the smallest spheres of heavy materials that employ the smallest collimation. An alternative procedure is to use the FWHM Gaussian quoted for these data sets but to include the target assembly (Fig. 6) and collimator (Fig. 3) in the neutron transport calculations.

Time Calibration

The data collected in the PDP-8i analyzer (Fig. 16(a)) are obtained as counts per channel vs channel number, which must be converted into counts per nsec

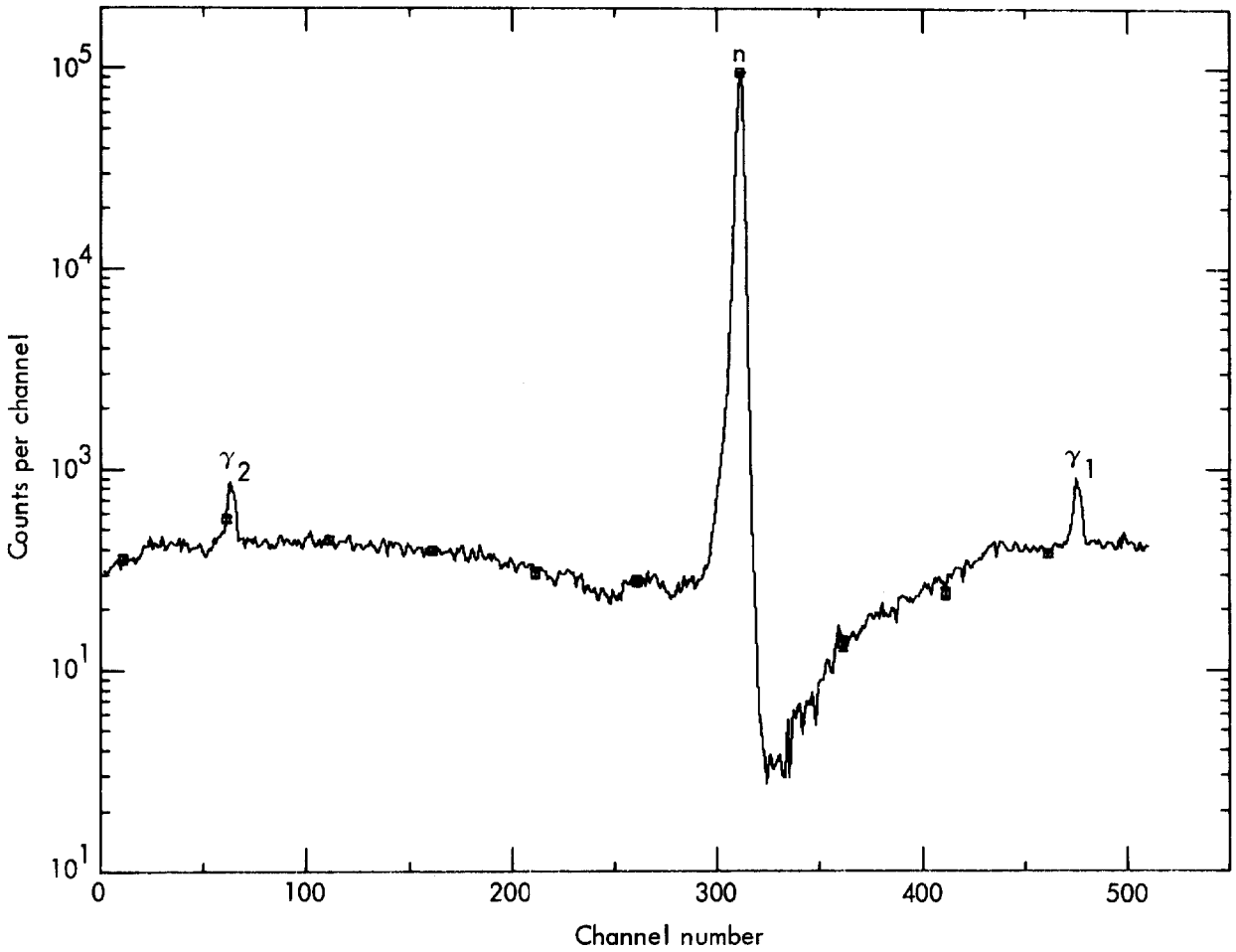

Fig. 16(a). Raw time-of-arrival neutron spectrum measured with NE213 for 0.9-mfp iron sphere. Increasing time-of-arrival is toward the left.

vs time of arrival. The time calibration of the spectrum is made using double display—i.e., one stop pulse for every two beam pulses. This results in two gamma peaks γ_1 and γ_2 (see Fig. 16(a)). Since the frequency of the beam pulses is 2.5 MHz, i.e., 400 nsec between pulses, this number divided by the total number of channels between γ_1 and γ_2 gives the average nsec/channel calibration. This procedure is valid only if every channel has the same time width, which experimentally is not always the case. To correct for any nonlinearities of time vs channel number, a random time spectrum is taken by feeding random start pulses from a source into the time-to-amplitude converter. (If the system is linear, the random spectrum of counts per channel vs channel will be a horizontal line; on the other hand, any deviation is a measurement of the nonlinearities.) The random time spectra were always used to convert the data from channel to time.

To transform from channel number to time of arrival, it is necessary to know not only the time calibration but also time 0, which is defined as the time when the 14-MeV neutrons were produced at the tritium-target and which can be determined

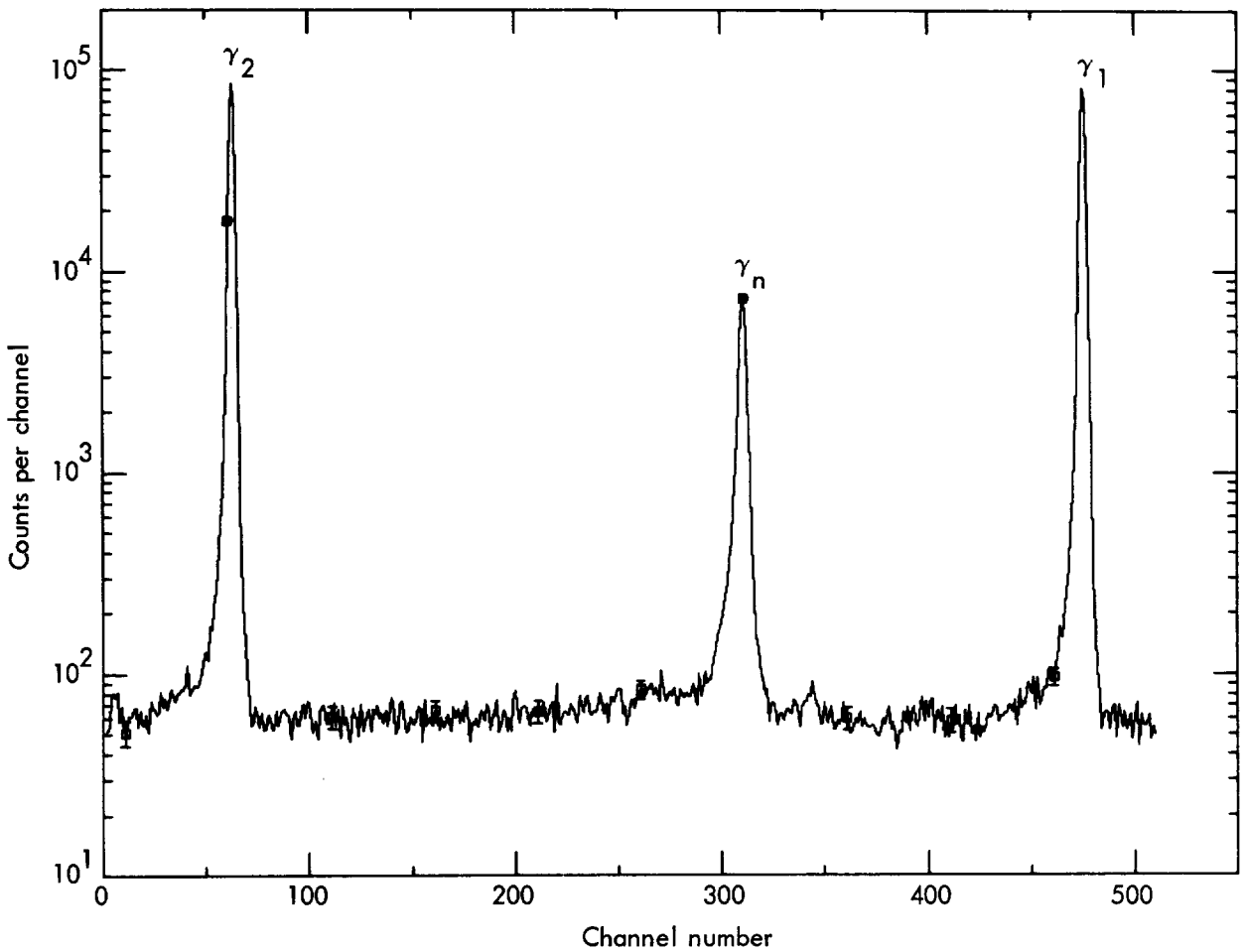

Fig. 16(b). Raw time-of-arrival gamma spectrum measured simultaneously with Fig. 16(a).

by using the position of the γ-ray peak (γ_1) in the spectrum. When the neutron detector is NE213, as is the case of Fig. 16(a), the γ-ray peak is small because gammas are suppressed by pulse shape discrimination. Figure 16(b) shows the gamma ray time spectrum from the iron sphere. This spectrum was recorded at the same time as the neutron time spectrum, and it can be used to locate more precisely time 0 for the neutron spectra. Since increasing time of arrival is towards the left in Figs. 16(a) and (b), time 0 is $\frac{L}{c}$ to the right of γ_1, where L is the tritium-target-to-detector distance and c is the velocity of light.

The peak marked γ_n in Fig. 16(b) results from gammas produced by 14-MeV neutrons interacting in or near the NE213 scintillator. Figure 16(c) shows the neutron time-of-arrival spectrum of 16(a) expressed in counts per nsec vs neutron time-of-arrival in nsec. Figure 16(d) is a sphere-out neutron spectrum employing pulse shape discrimination that was recorded the same day as the spectra of Figs. 16(a) and 16(b).

Background

The background to be subtracted from a given neutron spectrum arises from two different sources: the time-independent,

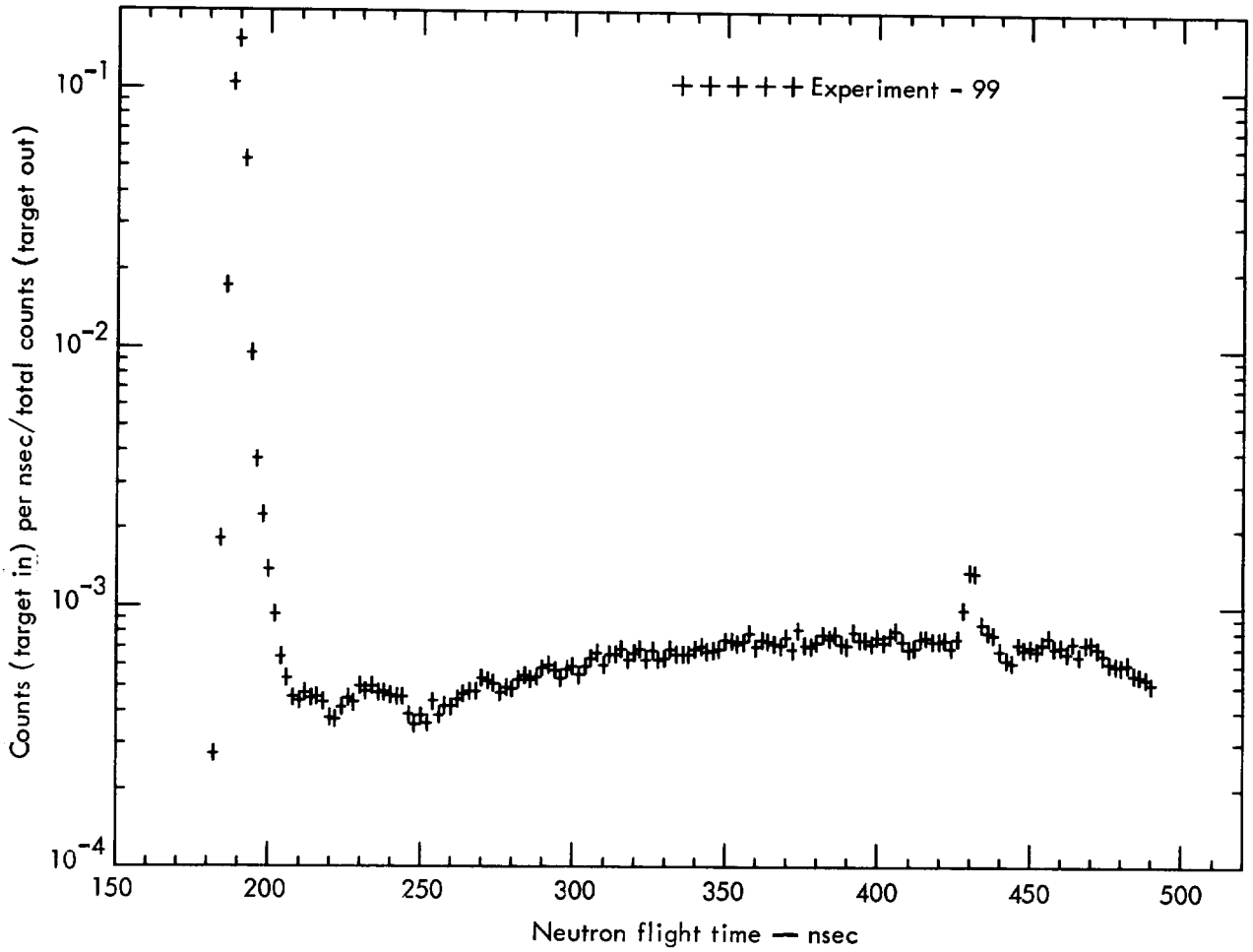

Fig. 16(c). Time-of-arrival spectrum of Fig. 16(a) expressed as counts/nsec/14-MeV counts vs time-of-arrival in nsec.

gamma-induced background and the time-dependent, neutron-induced background.

As the name implies, the time-independent, gamma-induced background is a background totally uncorrelated with the pulsing of the beam. It is mainly due to γ rays produced by the slowing down and capture of neutrons from earlier beam pulses, and it is constant in time. The contribution from this type of background is obtained from the counts accumulated between the 14-MeV neutron peak and the bias cutoff of the neutrons produced from the previous beam burst. For NE213 the magnitude of this background is much lower than the one obtained for Pilot B, showing that this time-independent background is indeed gamma-induced.

The time-dependent, neutron induced background effects have been thoroughly discussed under "Line Shape." There it was shown that target assembly and collimator scattering not only give rise to a low-energy tail on the 14-MeV time peak, but also neutron-induced counts at later times.

From Fig. 9 we see that this time-dependent, neutron-induced background, being more than three orders of magnitude smaller than the 14-MeV peak, is important only for the smallest spheres of the heavier materials. There is a contribution from

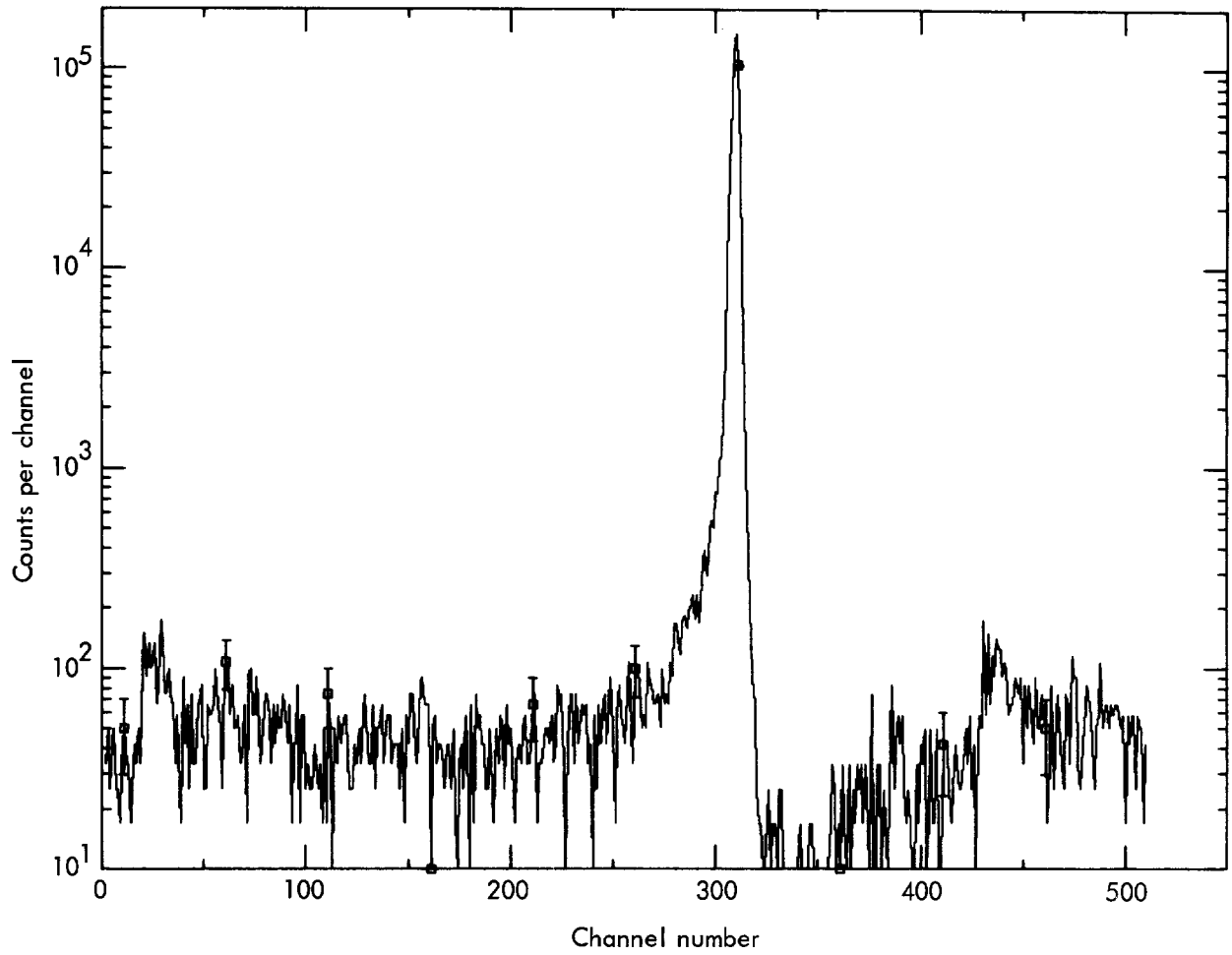

Fig. 16(d). Sphere-out spectrum taken under conditions identical to those of Fig. 16(a). The d+d buildup neutrons are evident at channels 25 and 440.

the $D(d,n)^3He$ reaction, which increases with deuterium buildup in the target. The contribution occurs at times later than those corresponding to the arrival of 3.3-MeV neutrons and is at least a factor 10^{-3} below the $T(d,n)^4He$ flux. The $D(d,n)^3He$ neutron peak is observable in Fig. 9 at a flight time of 320 nsec and has been minimized by employing fresh targets. The sphere data have not been corrected for time-dependent, neutron-induced background. This produces negligible error for the larger spheres. The smaller sphere data (less than 1 mfp and $A \geq 50$) therefore includes nonnegligible contributions from time-dependent, neutron-induced background, and hence the target assembly and collimator should be included in the neutron transport calculations for these cases. Alternatively, the target assembly and collimator can be ignored, and an empirical correction can be applied to the calculations using the blank spectrum of Fig. 9.

Data Processing

A magnetic tape is generated by the PDP-8i computer in the ICT control room. Further data processing is accomplished with a CDC 6600 computer.

Three output spectra are used to reduce each pulsed-sphere measurement. At least one blank run (and usually two), taken under the same conditions immediately before or after the pulsed-sphere measurement, is monitored for pulse width, pulse shape, background, and total 14-MeV neutron counts. The two neutron peaks from the blank run are integrated, and an average number of source neutron counts is determined. The gamma peak and 14-MeV neutron peak are used as a guide to the time resolution of the experiment. A random time spectrum is input into the data processing code for use in eliminating the effect of electronic nonlinearities in the conversion from channel to time. The sphere data is the third input spectrum. A constant background (equal to the average counts between the 14-MeV peak and the bias cutoff of the neutrons produced from the previous beam burst) is subtracted from the data.

Time scaling, using the random spectrum, is done as follows:

$$\frac{\delta t_{ij}}{\frac{1000}{f}} = \frac{\sum_{k=i}^{k=j} r_k}{R},$$

where f is the frequency in MHz, r_k is the random counts in channel k,

$$R = \sum_{k=\gamma_1}^{k=\gamma_2} r_k$$

(the total random counts between γ_1 and γ_2), and δt_{ij} is the time interval between i and j. Since the i and j locations are constrained to be integral numbers in nsec (see below), the corresponding i and j locations in the random spectrum do not occur at the integral channel numbers.

Time of arrival is computed from time 0, but starting at t_s, which is an integral number in nsec and is slightly to the right of the 14-MeV peak (see Fig. 16(a)). The point in the random spectrum corresponding to t_s is computed as

$$\frac{\frac{1000}{f} + \frac{L}{c} - t_s}{\frac{1000}{f}} = \frac{\sum_{k=\gamma_2}^{k=s} r_k}{R}$$

where L is the tritium-target-to-detector distance and c is the velocity of light. The conversion from channel number to integral nsec time units is then accomplished by augmenting t_s in integral nsec time units. Summing the pulsed-sphere data between channels corresponding to δt_{ij} = 2 nsec, where i and j are even numbers in nsec, yields a time-of-arrival spectrum C_{ij} in units of counts/2 nsec vs time of arrival in nsec. The data point is plotted at the center of the interval, i.e., at odd values of the time of arrival.

The data now exist as raw counts per time step δt_{ij} = 2 nsec. This array is then multiplied by a constant K_o defined as

$$K_o = \frac{\alpha_o (DTC)_o}{\delta t_{ij} N_o \alpha_I (DTC)_I},$$

where α_o, α_I, $(DTC)_o$, and $(DTC)_I$ are alpha counts and dead time corrections for the sphere-out (o) and sphere-in (I) runs, respectively; N_o is the number of counts in the 14-MeV peak from the

sphere-out run, and δt_{ij} = 2 nsec in the above example.

A computer plot of this final array ($K_o C_{ij}$) yields the time-of-arrival spectrum of Fig. 16(c) in units of counts (sphere-in) per nsec per total 14-MeV counts (sphere-out) vs time-of-arrival in nsec.

The energy is calculated relativistically from the time of arrival, t_i, as

$$E_i = 939.6 \left\{ \left[1 - \left(\frac{L}{t_i c} \right)^2 \right]^{-\frac{1}{2}} - 1 \right\}.$$

Using this formula, the detector efficiency curve, and the angular distribution for the source neutrons, the time-of-arrival spectrum of Fig. 16(c) is converted to an energy spectrum in units of neutrons per MeV per source neutron. Since the actual flight path of a multiply scattered neutron may vary from L, the procedure introduces some error, especially at low energies, for the larger spheres. Therefore, for these cases, comparison between experiments and calculations should be based on the time-of-arrival spectra and not the energy spectra.

Counting statistics are computed as follows for each data value:

$$\% \text{ error} = \frac{\sqrt{C_{ij} + B(2 + 0.01\ B)}}{C_{ij}},$$

where C_{ij} is net raw counts per time step δt_{ij} and B is the corresponding background using the constant, time-independent background value. The formula above assumes that the constant background value has a systematic uncertainty of 10% in addition to statistical uncertainties. The percentage error is then multiplied by the final array ($K_o C_{ij}$) to yield the absolute errors. This procedure is valid since the uncertainties in N_o, α_o, and α_I are negligible in comparison with that on C_{ij}.

The uncertainty in the detector efficiency arises in a calculation of the time-of-arrival spectrum of Fig. 16(c). Since the relative detector efficiency is folded into the calculations, the uncertainty in the calculated counts per nsec cannot be smaller than ±4%, the uncertainty in the relative efficiency. To be conservative, this figure has been increased to ±7%. For convenience, this efficiency uncertainty is included in the error on the measurements of Fig. 16(c), the errors shown being greater than ±7%. Hence in calculating the time-of-arrival spectrum for comparison with Fig. 16(c), zero uncertainty must be ascribed to the detector efficiency curve.

MEASUREMENTS OF LOW-ENERGY NEUTRON EMISSION SPECTRA ($10\ \text{eV} \lesssim E_n \lesssim 1\ \text{MeV}$)

This section deals with an extension of the experiments described in the preceding discussion into the energy region below 1 MeV. The only experimental changes involve the detection system and the frequency and burst width of the pulsed neutron source. A ^{6}Li loaded glass scintillator was chosen for the low-energy measurements because of its high efficiency, good time resolution, and ability to cover the energy range from 10 eV to 1 MeV. As pointed out in "Description of the ICT Neutron Facility," the Duo-Plasmatron Ion Source was used with frequency and pulse width variable

between 1 and 10 kHz and 25 nsec and 20 μsec, respectively. The ICT burst rate was normally maintained at 1 kHz (1000 μsec between pulses). A 0.051-cm-thick sheet of cadmium was placed over the end of the collimator port to prevent overlap between pulses caused by thermal and epithermal neutrons. (The cadmium cutoff is approximately at 0.5 eV which, for a 7.65-m flight path, corresponds to a flight time of about 780 μsec.) In a few cases, ICT repetition rates as high as 10 kHz were used, but the overlap effects were either negligible (because of the lack of low-energy neutrons) or small enough to be corrected for. For the higher-energy end of the measurements (near 1 MeV), narrow (25-200 nsec) burst and time channel widths were used to ensure reasonable energy resolution. For the lower-energy region, burst and time channel widths varying from 0.25 to 1.73 μsec were employed.

^{6}Li Glass Neutron Detector

The lithium-glass detector was a model NE912 manufactured by Nuclear Enterprises. It was made up of three individual discs 0.64 cm thick and 5.1 cm in diameter. The discs were coupled together with optical grease to form a single cylinder 1.9 cm thick. This scintillator was then coupled to an RCA 8575 photomultiplier using a 0.64-cm-thick and 5.1-cm-diam quartz light pipe. The composition of the ^{6}Li glass determined by LLL chemists was:

	Wt%
Si	35.1
Li (95% ^{6}Li)	7.6
O	53.1
Ce	1.2
Al and Mg	3.0

The cerium provides the light scintillations when the ^{6}Li(n,α)T reaction occurs. There are two problems with ^{6}Li glass detectors: they are sensitive to gamma rays, and their efficiency is difficult to calculate above 200 keV because of multiple scattering effects. Gamma backgrounds were accurately measured with a glass detector that is identical except that it contains ^{7}Li instead of ^{6}Li. Alternatively, an approximate gamma background can be measured using the ^{6}Li detector itself. The details of the gamma background measurements are given later in the discussion on "Background." The detection efficiency was determined in a tedious one-time calibration against a low-efficiency ^{235}U fission chamber, as will be described in "Measured Efficiency of ^{6}Li Glass as a Function of Neutron Energy."

A typical pulse-height spectrum measured with the ^{6}Li detector with the quartz light pipe is shown in Fig. 17. The neutrons were produced by a Pu-Be source located behind paraffin blocks with the detector mounted in a fixed position on the other side of the paraffin. The Q value of the ^{6}Li(n,α)T reaction is + 4.8 MeV; since the paraffin neutron spectrum is essentially thermal, the alpha and triton have a combined energy of 4.8 MeV and appear as a sharp peak with a pulse-height resolution of 18% on top of a Compton electron background produced by the 2.2-MeV capture gammas from hydrogen and 4.4-MeV gammas from the Pu-Be source. Using a ^{60}Co gamma source, it has been determined that the

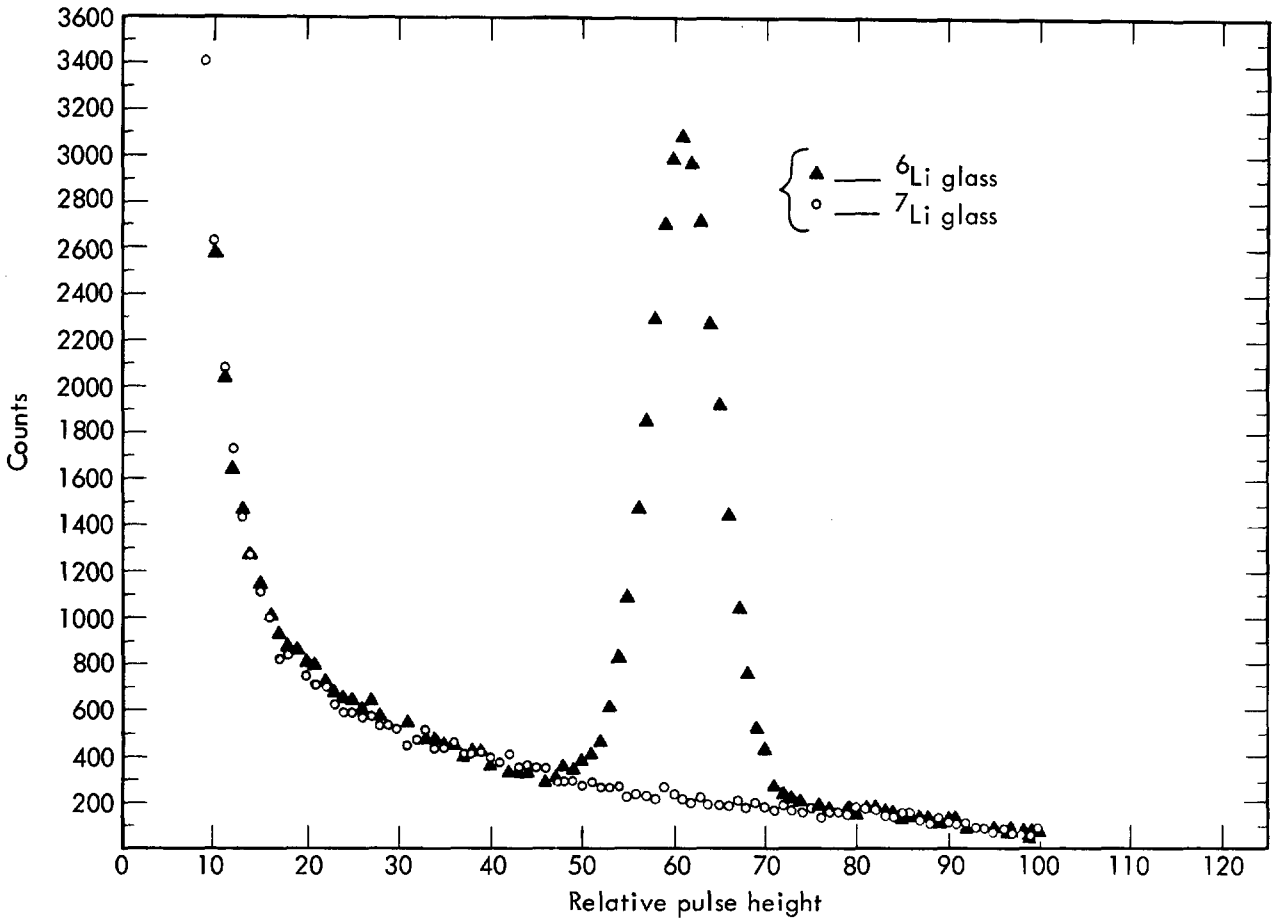

Fig. 17. Pulse-height spectra for ^{6}Li and ^{7}Li glass from a Pu-Be source moderated in paraffin.

alpha and triton "thermal" recoil pulse height is equivalent to that produced by a 1.52-MeV electron. Without the quartz light pipe the resolution deteriorated to 25%. The quartz light pipe therefore improves the resolution by approximately 30%, which means the gamma background is reduced by this amount since the pulse-height window can be narrowed by 30%. To detect up to 1-MeV neutrons, the thermal pulse height window is widened by increasing the upper level by the ratio $\frac{5.8}{4.8}$. The light pipe also helped simplify the calculations of the ^{6}Li glass efficiency. The backscattering from the photomultiplier tube appreciably affects the efficiency, but the exact dimensions of the tube window are not known. Use of the light pipe places a fixed amount of glass behind the detector and simplifies the calculational geometry.

Figure 17 also shows the spectrum for ^{7}Li glass taken under conditions identical to that for ^{6}Li glass. Except for the alpha and triton peak, the spectra are identical, indicating that ^{7}Li glass does indeed provide a measurement of the gamma background.

Description of Detector Package

The ^{6}Li glass detector package is shown in Fig. 18, which shows the 1.9-cm-thick scintillator, the 0.64-cm-thick quartz

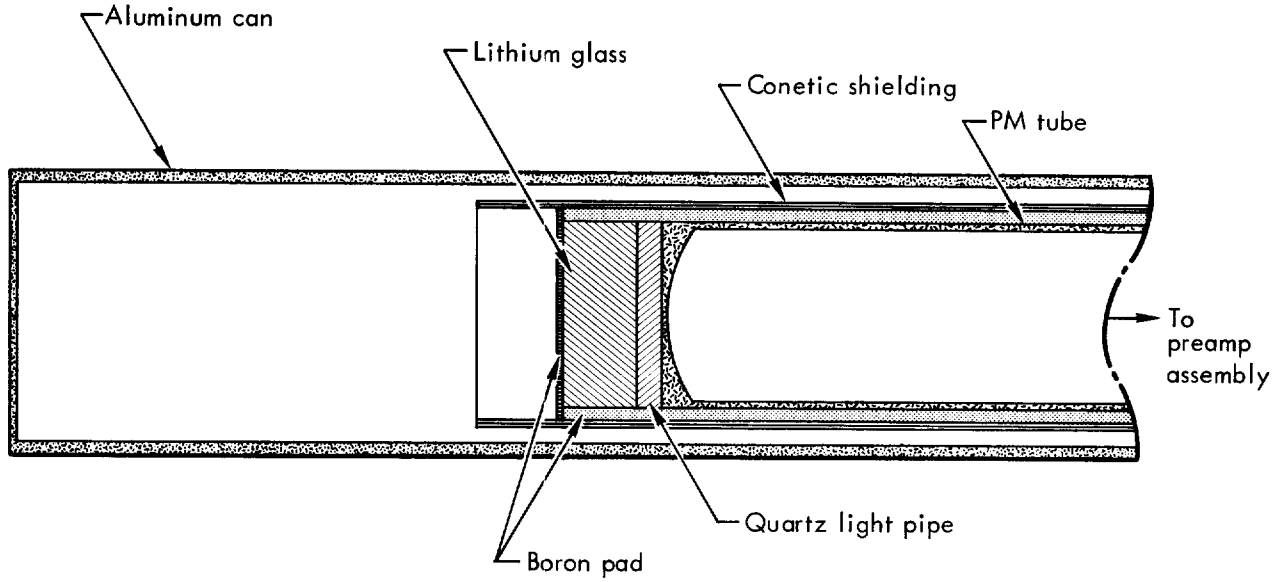

Fig. 18. Lithium glass detector package.

light pipe, magnetic shielding around the RCA 8575 photomultiplier tube, and the boron pad around the scintillator. The boron pad shields against the time-independent epithermal flux from the target pit. The location of the detector package (and more specifically, the aluminum can) with respect to the collimator assembly is as shown in Fig. 3.

Measured Efficiency of ^{6}Li Glass as a Function of Neutron Energy

The lithium-glass detector contains only 7.6 wt% (20 at.%) of ^{6}Li. The remainder of the glass is mostly oxygen and silicon. The detector has a high efficiency between 100 keV and 1 MeV because of the large resonance in the (n,α) cross sections at 250 keV. If the (n,α) cross sections were well known and if the amount of scattering material were small, then the efficiency could easily be calculated. However, neither of these conditions is satisfied above about 100 keV. Oxygen has scattering resonances at 420 keV, 1 MeV, and 1.25 MeV; and silicon has resonances at 200 keV and 575 keV. The interaction of neutrons with these anisotropic scattering resonances makes it extremely difficult to calculate the efficiency over the ^{6}Li resonance between 100 keV and 1 MeV. Multiple scattering in the detector can increase the efficiency by as much as 60%. Furthermore, the ^{6}Li(n,α)T cross section is poorly known, because most measurements of that cross section involve use of lithium glass detectors or ^{6}LiI crystals, which have similar problems with multiple scattering. Also, the cross section measurements usually have uncertainties due to source normalization problems. The "reliable" ^{6}Li(n,α)T measurements differ by as much as 50% over the 100-keV to 1-MeV energy range, further emphasizing the lack of suitable neutron detectors in this energy range, which could be used as standards.

We decided to calibrate the lithium-glass detector against a fission chamber

over the energy range 2 keV to 1.5 MeV. Below 2 keV the fission resonances do not permit a clean measurement, and it was assumed that the detector efficiency could be computed with good accuracy. The fission chamber was a multiparallel plate assembly borrowed from ORNL. It contained 29, 4-in.-diam plates, 27 of which were plated on both sides. The plates were of 0.0127-cm-thick aluminum and were spaced 0.1 cm apart. The plating material was U_3O_8 and the active area of the detector was 8.89 cm in diameter. The total amount of uranium (93% ^{235}U) was 3.5 g, with a plating thickness of about 1 mg/cm^2. The chamber had a neutron fission peak/alpha valley ratio of about 2.5 for Pu-Be neutrons moderated in paraffin, so a clean separation was possible between fission fragments and alphas.

The neutron source consisted of a 25-cm-diam, 4.58-cm-thick beryllium shell. The shell was pulsed at its center with 14-MeV neutrons produced by the ICT. A 10-kHz burst rate was used. The overlap effects at this repetition rate were determined to be negligible over the energy range of the measurement. This was verified by taking some measurements at 1 kHz and 2 μsec channel widths (see Fig. 19). The glass was located in the 60° beam port of the ICT target pit at a flight path of 980 cm, and the fission

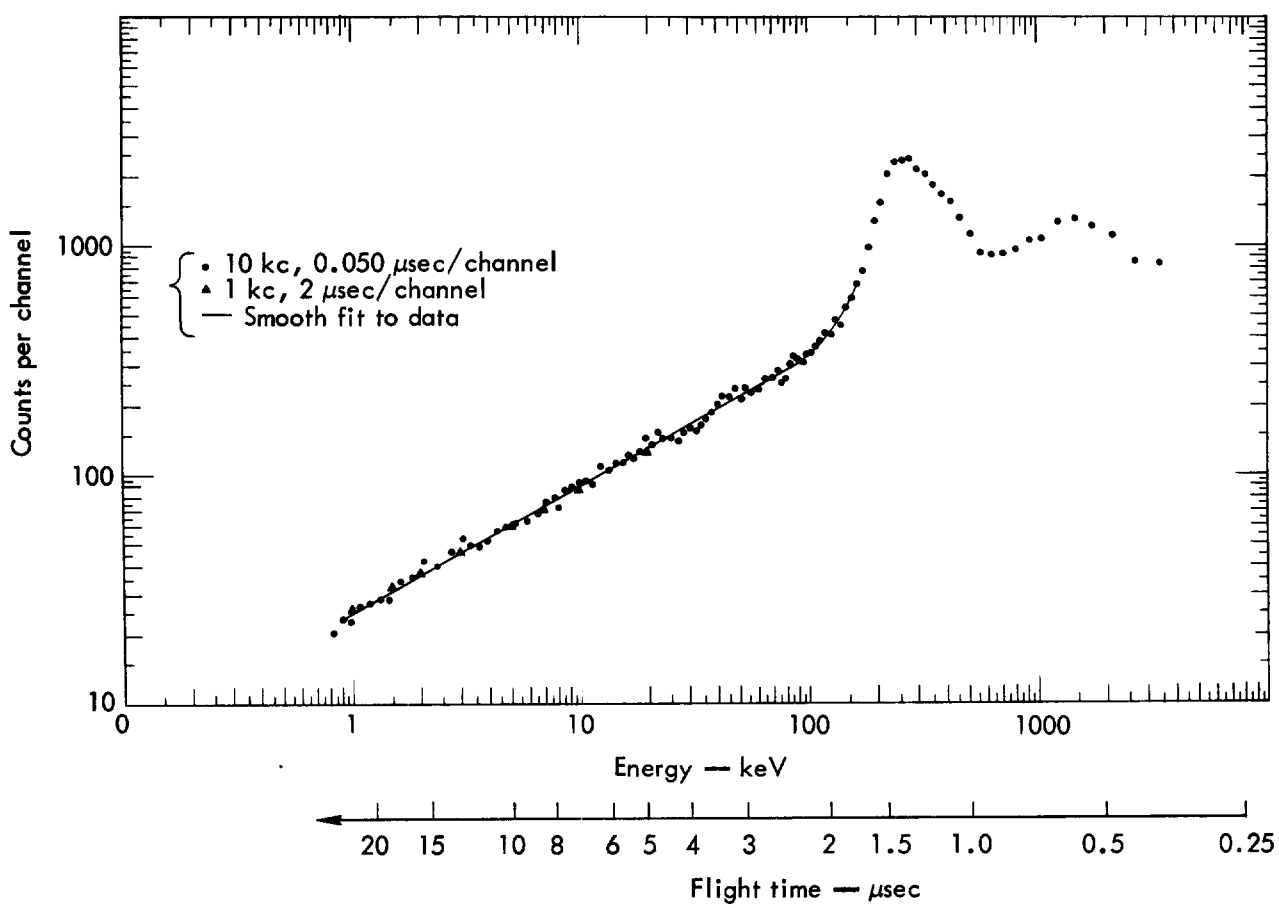

Fig. 19. Time-of-arrival spectrum from a Be shell as measured with the ^6Li glass detector during the calibration run.

chamber was located in the 30° port at a flight path of 700 cm. The fission chamber was encased in an 0.1-cm-thick ^{10}B-loaded silastic pad containing about 76 wt% boron to remove stray low-energy neutrons that might otherwise reach the detector. It was located behind one 2-ft-long section of boron-loaded plastic collimator and a 6-in. section of iron collimator, both of the same type as those that were located in front of the lithium-glass detector. The lithium glass was also wrapped with a boron-silastic pad containing natural boron. Figure 18 shows the lithium-glass detector in the geometry that was used for the calibration and in all of the pulsed-sphere experiments. The collimator geometry was identical to that in Fig. 3.

Figures 19 and 20 show the time-of-flight spectra measured with the lithium glass and the fission chamber, respectively. The ICT burst width here was 100 nsec, and the detector channel widths were 50 nsec. The relative lithium-glass efficiency is obtained from the ratio of the two curves after correcting for difference in flight path and by using the relatively well-known ^{235}U fission cross section. Since the effective amount of ^{235}U in the fission chamber is not known very well (due to uncertainties in plating thickness and fission losses in the alpha biasing), a fission-chamber measurement of the blank target without the beryllium sphere was necessary for normalization to the 14.8-MeV fission cross section of 2.18 b. The absolute number of neutrons for the blank target was measured with a Pilot B detector of known efficiency for 14-MeV neutrons. The efficiency of the glass detector was then obtained.

Figure 21 shows the final results for the lithium-glass efficiency. The time resolution of the measurement is about 17.5% FWHM at 1 MeV, amounting to a 35% energy resolution. At 250 keV (the peak of the resonance) the time resolution is about 9% and the energy resolution is 18%. The resolution is adequate when one considers that the responses of both detectors are monotonic and vary slowly above 500 keV. In fact, measurements of the beryllium sphere with the glass detector have been made with a 25-nsec channel width and a 50-nsec burst width and agree within a few percent of the measurements above. The minimum burst and channel widths in the pulsed-sphere experiments were 50 and 25 nsec, respectively, so the energy resolution of the above calibration appears to be quite adequate.

Calculated Efficiency of ^{6}Li Glass as a Function of Neutron Energy

The SORS calculation of the lithium-glass efficiency is also shown in Fig. 21. The detector geometry used in SORS is the same as that in Fig. 18. It agrees with the measurement to within ±20%. The $^{6}Li(n,\alpha)T$ cross sections for the SORS calculations were taken from Sowerby's evaluation.[4] His recommended values are shown in Fig. 22. Above 250 keV, Sowerby recommends following the smooth line shown on the figure. Below 250 keV, an "eyeball" fit has been made to the data with assistance from Sowerby's recommendations. The dotted line represents Howerton's evaluated library. The agreement between calculation and experiment is quite good, and one might almost say that the present calibration is as good a

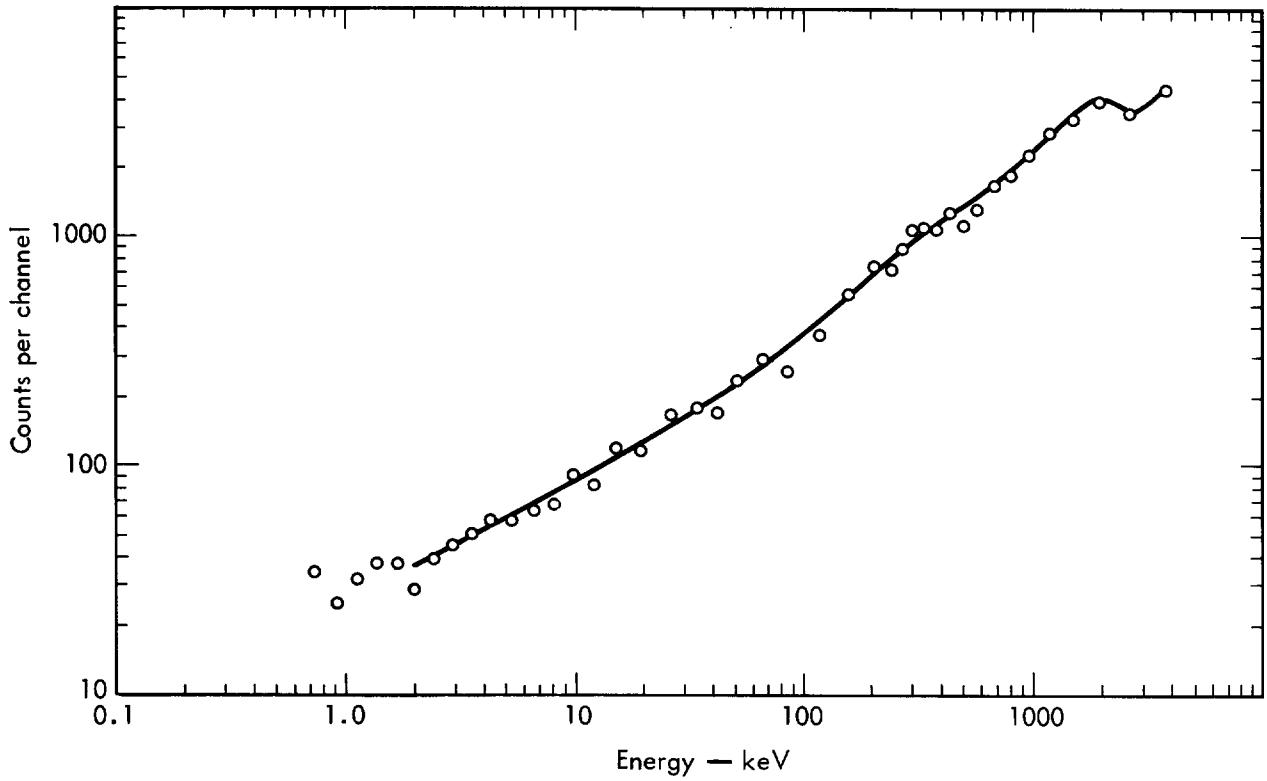

Fig. 20. Time-of-arrival spectrum from a Be shell as measured with the ^{235}U fission chamber during the calibration run.

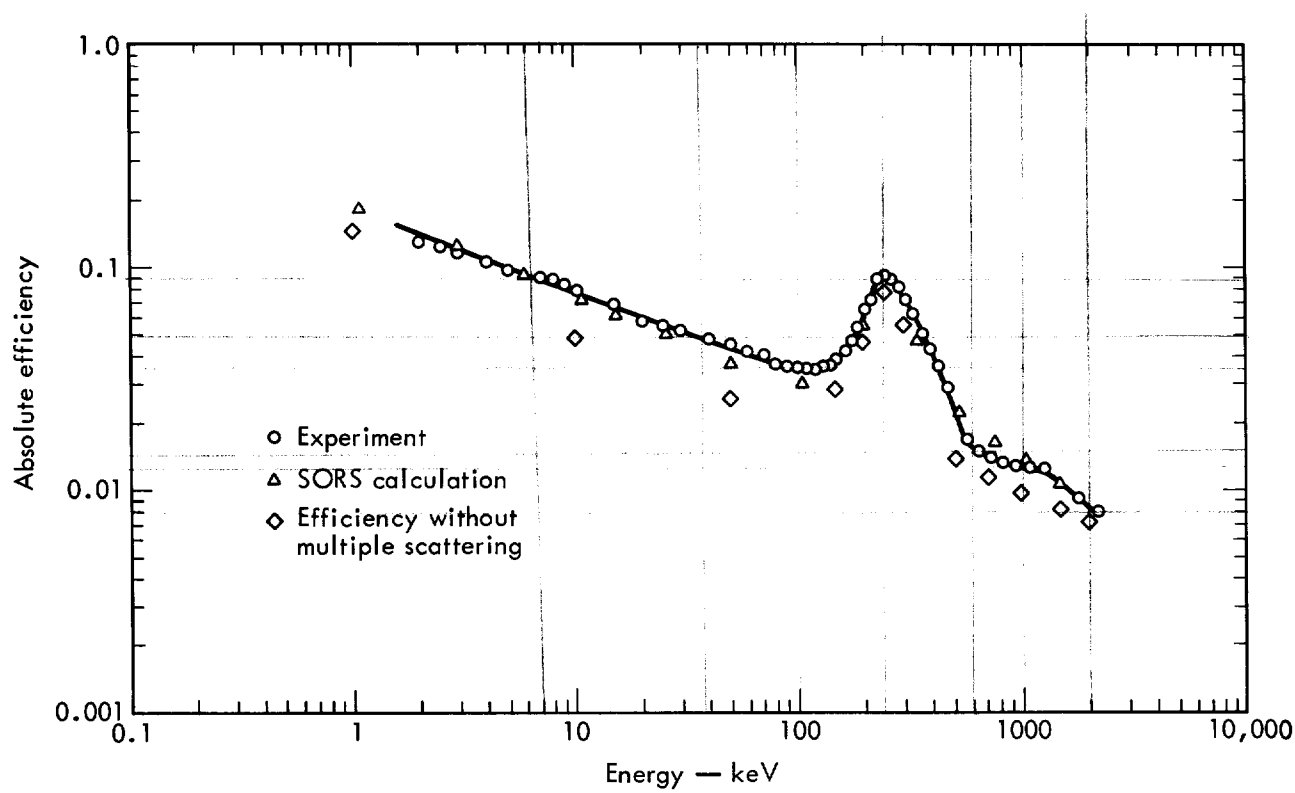

Fig. 21. Calculated and measured absolute ^{6}Li glass detector efficiency.

measurement of the $^{6}Li(n,\alpha)T$ cross section as any of the others in Fig. 22. The values of the glass efficiency without multiple scattering are also shown in Fig. 21; the multiple scattering effect reaches a maximum of 60% at about 100 keV. No calibration is available below 2 keV, and the SORS calculation of the efficiency presented in Table 2 is used. Because of uncertainties in the boron content of the boron pad shielding the detector, the calculated efficiency has a 25% uncertainty at 1 eV and a 7% uncertainty at 10 eV. The measured efficiency at all other energies is believed to be accurate to within 15%. (This does not include an estimate of the error due to uncertainties in the fission cross section of ^{235}U.)

As mentioned in "Description of the ICT Neutron Facility," use of the collimated holes gives rise to the outscatter-inscatter effect in which there is high-energy-neutron outscatter from the detector assembly and subsequent inscatter due to materials surrounding the detector. Tests for the magnitude of this background effect on the ^{6}Li glass and ^{235}U fission chamber were made by placing resonance absorbers over the collimator ports. Comparison of the resonance dips in the measured spectra with expected dips gave an excellent indication of the background. For the calibration data of Fig. 21, a sodium chloride absorber indicated that the background at the 2.85-keV resonance was less than 15% for the lithium-glass detector

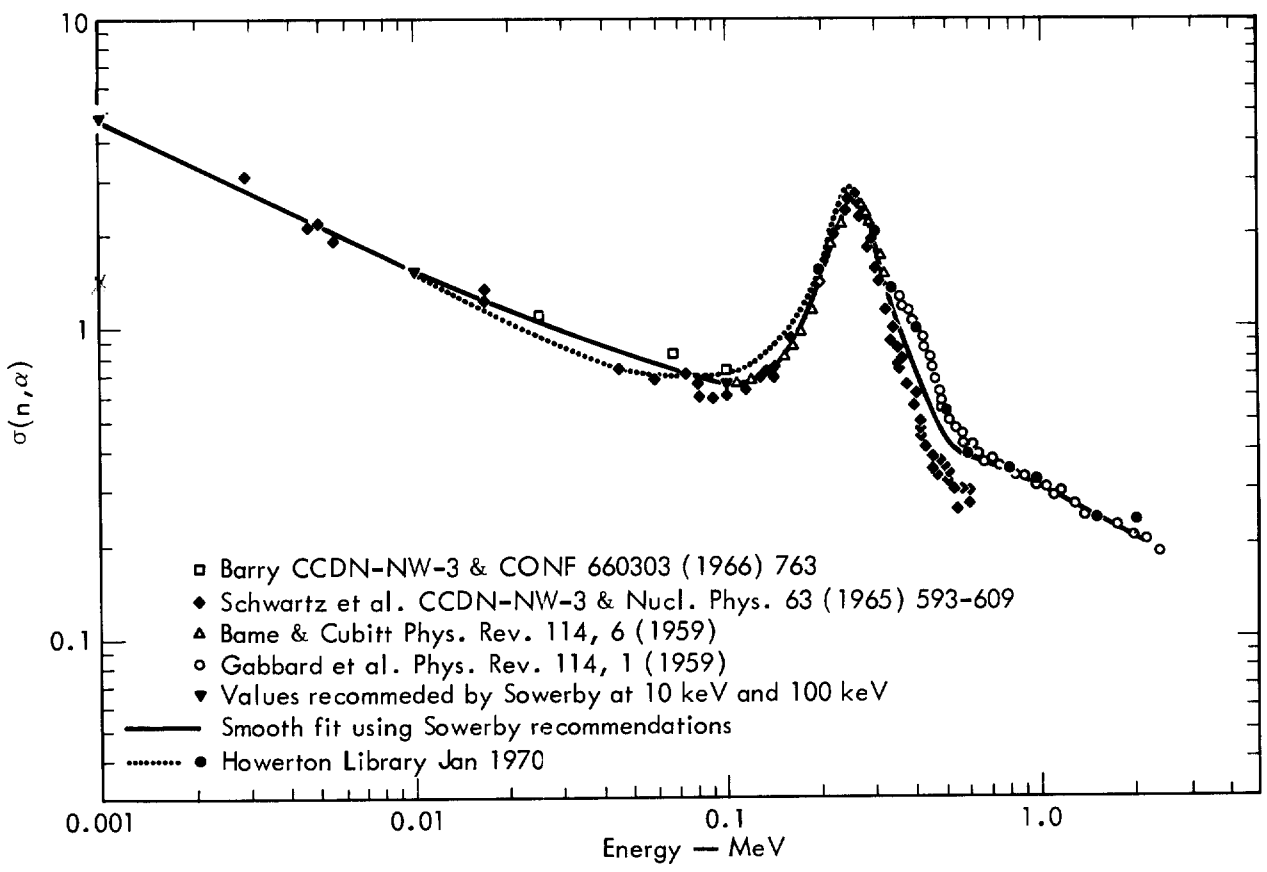

Fig. 22. $^{6}Li(n,\alpha)T$ cross section data as a function of neutron energy.

Table 2. Calculated ^{6}Li detector efficiency below 2 keV.

E_n (keV)	ϵ
4.0	0.107
2.0	0.14
1.6	0.152
1.2	0.17
0.9	0.19
0.7	0.217
0.5	0.243
0.4	0.263
0.3	0.290
0.25	0.308
0.2	0.33
0.16	0.35
0.12	0.38
0.09	0.41
0.07	0.435
0.05	0.465
0.04	0.485
0.03	0.501
0.025	0.525
0.02	0.54
0.016	0.555
0.01	0.58
0.005	0.59
0.003	0.55
0.002	0.525
0.0015	0.50

and less than 20% for the fission chamber. For a ^{6}Li absorber the dip at the 250-keV resonance indicated a background of less than 3% for the lithium glass and less than 14% for the fission chamber. For a manganese dioxide absorber the dip at the 325-eV manganese resonance indicated less than about a 5% background effect for the ^{6}Li detector. It was not possible to obtain a clean measurement for the manganese dip with the fission chamber because of the ^{235}U fission resonances and poor counting statistics. Since the absorption measurements yield upper limits and not precise numbers, the measured counts in the two detectors have not been corrected for the outscatter-inscatter background. In addition the background effects from the two detectors should cancel in large part when the ratios of the two detector count rates are taken for the calibration. It appears that the maximum uncertainty in the lithium-glass efficiency due to not correcting the outscatter-inscatter background is less than 10%.

Schematics of Electronics Used in the Detection of Low-Energy Neutrons

Block diagrams of the electronics are shown in Figs. 23 and 24. For the higher-energy end of the measurements (near 1 MeV), the electronics in Fig. 23 were used to obtain narrow time channel widths. A time-to-amplitude converter (TAC) was used to provide the timing information to the ADC input of the PDP-8i computer. The TAC was used to obtain channel widths varying from 25 to 200 nsec. The TAC had a maximum time ramp of 80 μsec, corresponding to a neutron energy of about 50 eV. To obtain larger channel widths and lower energies, it was necessary to use the electronics of Fig. 24. Here the start and stop pulses from the detector and ICT pickoff, respectively, are fed to a ramp generator that opens a linear gate for the appropriate length of time. A variable-frequency oscillator is fed through the gate directly to the address scalers of the PDP-8i (bypassing the ADC input). The oscillator frequency determines the channel width, which was varied

from 0.25 μsec to 1.73 μsec. In all cases, the burst width of the ICT was made approximately equal to the channel width.

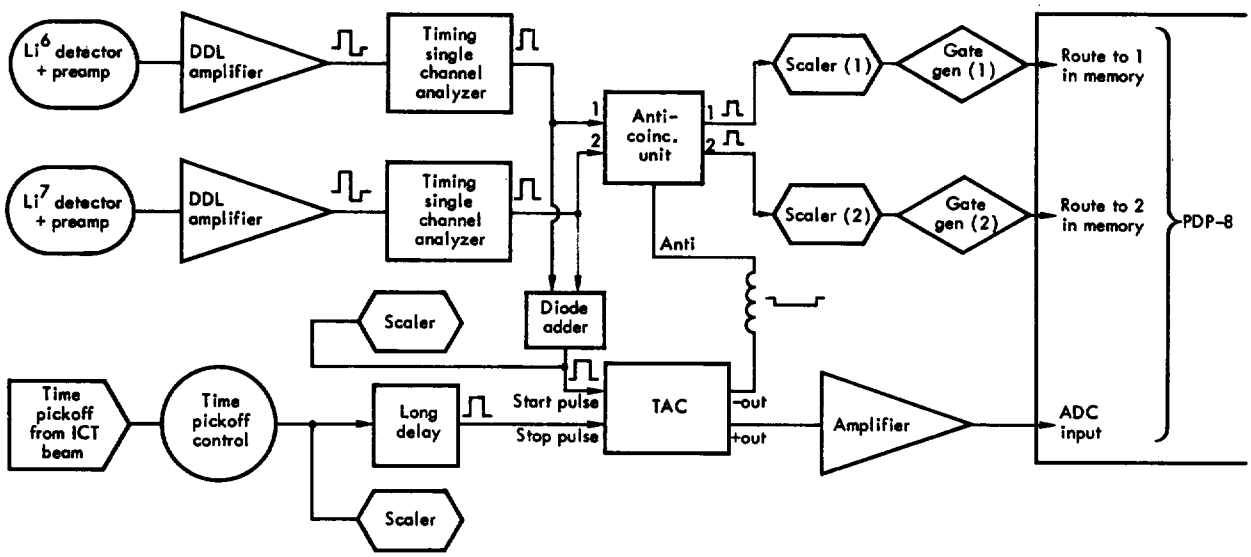

Fig. 23. Time-of-flight electronics for measuring the low-energy emission spectrum near 1 MeV.

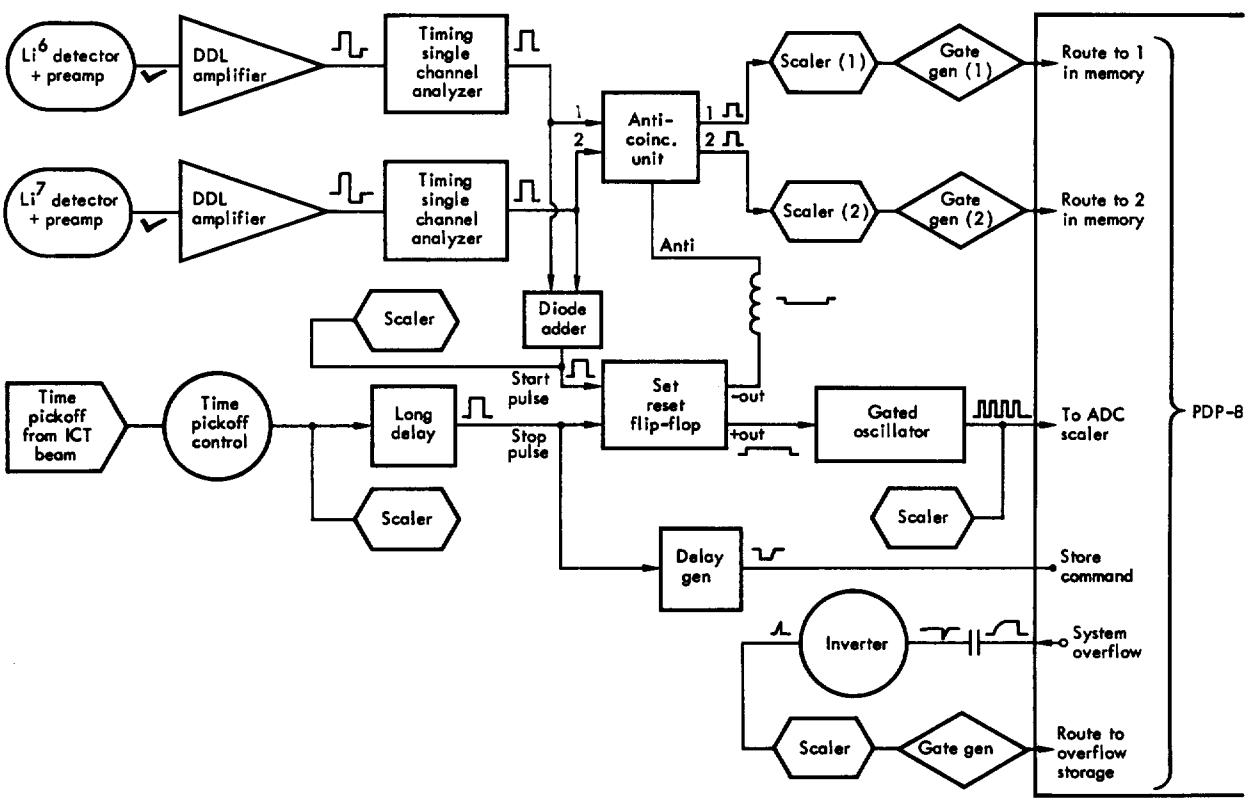

Fig. 24. Time-of-flight electronics for measuring the low-energy emission spectrum down to approximately 10 eV.

Time Resolution

Since the low-energy measurements generally exhibit a slowly varying continuum emission spectrum, time resolution is not an important consideration. Structure can be introduced into the emission spectrum by the so-called window effect, i.e., an enhancement in the emission spectrum due to a minimum in the total cross section at that particular energy. For spectra exhibiting pronounced window effects, narrower burst and channel widths were employed to ensure that the window was not broadened by the time resolution. Therefore, the low-energy time spectra compiled in Section II are not significantly altered by time-resolution effects and should be compared directly with calculations.

Time Calibration

The electronics of Figs. 23 and 24 did not incorporate double display, and hence the time calibration cannot be obtained from the pulsed-beam frequency coupled with a random time spectrum. The time calibration was obtained by inserting precision time delays in the stop channel and measuring the channel displacement of either the gamma peak or 14-MeV peak in the PDP-8i analyzer. In this manner the conversion from channel to flight time is obtained.

Although the effective efficiency for detecting 14-MeV neutrons through the ^{6}Li(n,α)T reaction is zero because of the pulse-height window employed (see "Relative and Absolute Source Strength Determination"), 14-MeV neutrons are detected through the (n,α) reaction on the silicon in the glass of the ^{6}Li detector. For a flight path of about 9 m, the separation between gamma rays and 14-MeV neutrons amounts to approximately 150 nsec. Using a channel and burst width of approximately 25 nsec, the gamma and 14-MeV neutron peaks are clearly resolved. In this manner the displacement of the gamma peak was observed quite accurately for the time calibration. In addition, the location of the gamma peak allowed us to compute the zero of flight time, i.e., the time at which the 14-MeV neutrons were generated from the T(d,n)^{4}He reaction.

The accuracy of the time calibration can be checked independently by comparing the measured energy of the ^{6}Li(n,α)T resonance with the known resonance energy of 250 keV. The 26-keV resonance in iron is another fiducial point for ascertaining the accuracy of the time calibration. In all cases there was excellent agreement, showing the correctness of the time calibration.

Background

As with the high-energy measurements, background can be separated into gamma-induced, time-independent and neutron-induced, time-dependent effects.

Time-Independent Background

As with the high-energy measurements, the time-independent background is mainly induced by gamma rays that result from the slowing down and capture of room-return neutrons from preceding beam bursts. This was verified using the ^{7}Li glass gamma-ray detector, which shows a time-independent background level identical to the preburst ^{6}Li detector background. For hydrogenous materials like H_2O, CH_2, and concrete the gamma

background is not flat. This is a direct result of the slowing down and capture of neutrons in the hydrogenous spheres. For these cases, the appropriate ^{7}Li detector background was subtracted from the ^{6}Li data. For all other cases, a time independent background level identical to the pre-burst background was subtracted from the data.

Time-Dependent Background

The high-energy, time-dependent, neutron-induced background is due mainly to target assembly scattering and collimator streaming effects. The low-energy, time-dependent, neutron-induced background, on the other hand, is due mainly to (n,n') reactions on the tungsten backing and the outscatter-inscatter effect in which the primary high-energy flux is outscattered by the detector assembly and subsequently inscattered from materials surrounding the detector to register as apparent low-energy counts.

A ^{6}Li glass measurement of the spectrum emerging from the blank (no sphere in place) ICT target shows the magnitude of the outscatter-inscatter effect (see Fig. 25). If everything were perfectly clean, we should get just 14-MeV neutrons. The spectrum in Fig. 25 was measured on two separate occasions and the results agree well. There appears to be energy structure at the peak of the ^{6}Li resonance (1.4 μsec and 250 keV), indicating that at least part of the neutrons are produced at the source. Various calculations and experiments were done to determine what

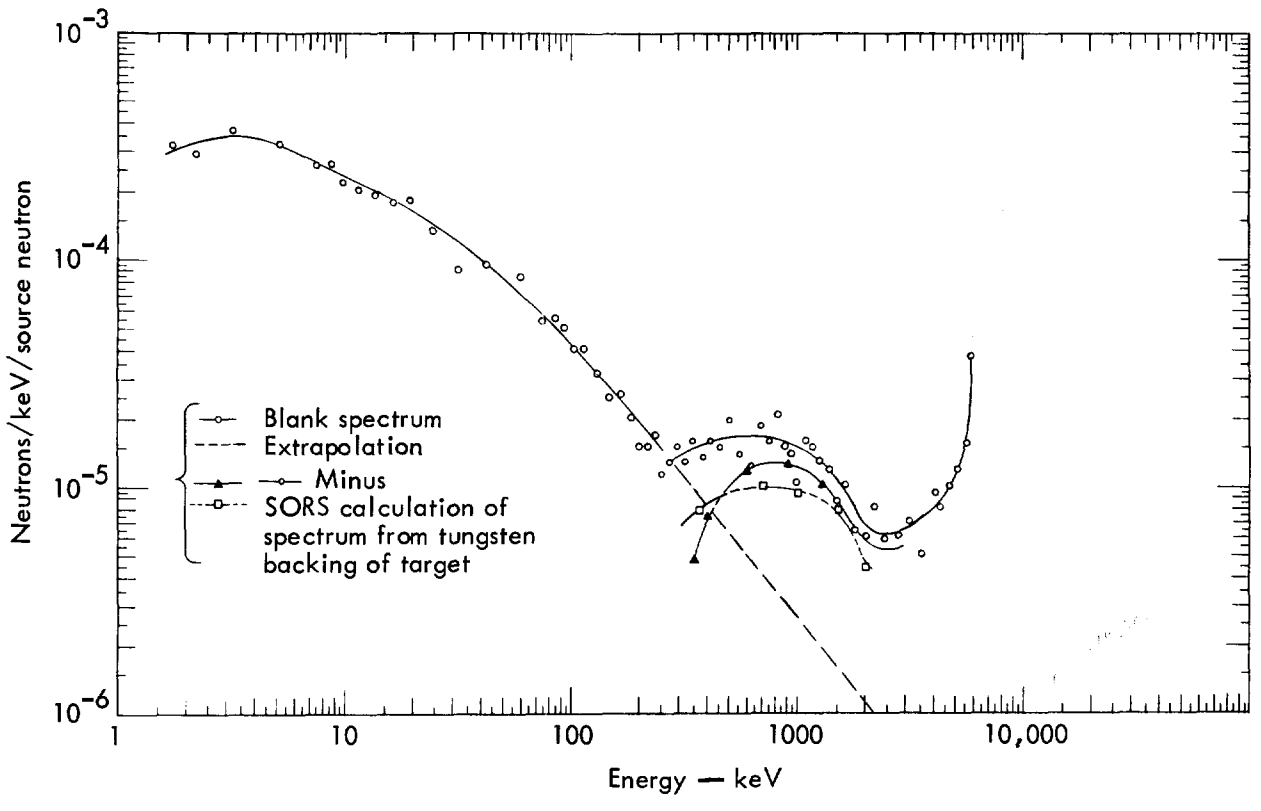

Fig. 25. Sphere-out spectrum showing the outscatter-inscatter background and (n,n') neutrons from the tungsten backing.

might cause such a low-energy, source-related background. The tritiated titanium target is backed by a 0.051-cm-thick disc of tungsten. A 0.16-cm-thick plate of tungsten was placed in front of the target, and the number of neutrons in the peak relative to the wings of the resonance increased by a factor of 2.5, whereas the rest of the curve at longer flight times was relatively unaffected. This indicated that only part of the background was related to the tungsten backing of the source. The tungsten thickness was then quadrupled, and the height of the 250-keV peak was increased by a factor of three. The tungsten in the target backing should be more effective than the 0.16-cm plate, since the neutrons are generated at the surface of the backing and can experience longer track lengths in the backing than in the external plate, which was somewhat removed from the source. Figure 25 shows a SORS estimate of the spectrum from the tungsten backing; the SORS calculation agrees fairly well with the measurement if the nonresonance part of the background is stripped from the 250-keV resonance.

The nonresonant part of Fig. 25 is attributed to the outscatter-inscatter effect. SORS calculations were done in an attempt to calculate the effect, and only qualitative agreement was achieved. A better calculation could have been done had the moisture content of the surrounding soil been known.

The low-energy pulsed-sphere measurements have not been corrected for the time-dependent, neutron-induced background, i.e., (n,n') neutrons from the tungsten backing and the outscatter-inscatter effect. For the 26° measurements—which did not employ the collimated holes, but instead a large enclosure—there is no outscatter-inscatter correction, and the tungsten backing must be included in the transport calculations. Ignoring the tungsten backing can introduce an appreciable error in calculating the smaller spheres, where few low-energy neutrons are produced; e.g., about 30% error in the 1-mfp oxygen sphere between 500 keV and 1 MeV. For measurements utilizing the collimated holes, the transport calculations for the smaller spheres must include the tungsten background, and the calculations must further be corrected empirically for the outscatter-inscatter effect using the blank spectrum of Fig. 25. In a particular sphere experiment, the contribution per source neutron in Fig. 25 must be multiplied by the number of neutrons above 10 MeV in that spectrum in order to yield the empirical corrections.

Data Processing

A magnetic tape is generated by the PDP-8i computer in the ICT control room. Further data processing is accomplished with a CDC 6600 computer.

For the nonhydrogeneous materials, a constant time-independent background, identical to the preburst level, is subtracted from the low-energy pulsed sphere data. Time scaling is identical to that described in the previous section on "Data Processing" for the high-energy measurements. Here a pseudo flat-random time spectrum is employed. The time calibration of μsec/channel for the flat random is obtained by the use of precision time delays in the stop channel (see "Time Calibration"). These measurements show a linear relationship

between time delay and channel number, indicating that the use of a pseudo flat-random spectrum is indeed justified. Summing the pulsed-sphere data between channels corresponding to a constant time width, δt_{ij}, yields C_{ij}, a raw time-of-arrival spectrum in units of counts/δt_{ij} vs time-of-arrival. Again the data point is plotted at the center of the δt_{ij} time interval. The C_{ij}'s are multiplied by the quantity $\frac{1}{S\ \delta t_{ij}}$ to yield a time-of-arrival spectrum in units of counts/μsec/source neutron. S is the number of source neutrons emitted during the pulsed-sphere run (see "Relative and Absolute Source Strength Determination"), and δt_{ij} is the time interval in μsec. Since the errors on S and δt_{ij} are much smaller than the error on C_{ij}, the error is computed from the error on C_{ij} alone. The percent statistical counting error on C_{ij} is computed as shown in the previous section on "Data Processing."

The uncertainty in the detector efficiency is reflected in a calculation of the counts/μsec/source neutron when the detector efficiency is folded into the calculation to obtain the predicted counts/μsec/source neutron. In the compilation of Section II this uncertainty is for convenience included in the measured values of counts/μsec/source neutron, i.e., the absolute overall errors are compounded from the statistical counting errors on C_{ij} and an estimate of the errors in the absolute ^{6}Li glass detector efficiency. Therefore, in computing the counts/μsec/source neutron for comparison with experiment, no uncertainty should be assigned to the detector efficiency curve. Since the conversion from counts to neutrons requires the detector efficiency, the error on the energy spectra (neutrons/MeV/source neutron) includes both the statistical counting error and the uncertainty in the detector efficiency.

Acknowledgments

We are deeply indebted to Dr. E. Goldberg for suggesting the pulsed-sphere experiments and for his continuing interest and encouragement.

References

1. L. F. Hansen, et al., Nuc. Sci. and Engrg. 35, 227 (1969); L. F. Hansen et al., Nuc. Sci. and Engrg. 40, 262 (1970); L. F. Hansen, et al., "Sensitivity of Monte Carlo Calculations to the Neutron Cross Sections for Neutron Transport in Nitrogen and in Air," Lawrence Livermore Laboratory Rept. UCRL-51031 (1971), M. Stelts, et al., Nuc. Sci. and Engrg. 46, 53 (1971); P. S. Brown, et al., Trans. Am. Nucl. Soc. 14, 398 (1971).
2. A. Elwyn, et al., Phys. Rev. 116, 1490 (1959).
3. B. A. Pohl, et al., A Method for Determining Scintillator Response Functions for Fast Neutrons, Lawrence Livermore Laboratory, Rept. UCRL-50653 (1969).
4. M. G. Sowerby, "Some Notes on the ^{6}Li(n,α) Cross Section from Thermal Energies up to the (n,n',α)d Threshold (1.718 MeV)," Internal Memorandum NDWP/67/5, Atomic Energy Research Establishment, Harwell, United Kingdom (1967).

Section II. Compilation of Measured Low-Energy and High-Energy Time and Energy Spectra

An outline of the target materials measured is shown below. The sphere sizes are given in nominal mean free paths for 14-MeV neutrons, and the emission spectra are indicated as high-energy (2 through 15 MeV) or low-energy (below 1 MeV).

Section II is presented in two parts—high-energy spectra with identifying experiment number and then as an addendum to Section II, the low-energy spectra. For the high-energy spectra, the tabulated errors are statistical counting errors only, while the plotted errors are 7% or the statistical errors, whichever are larger. The "high-energy" energy spectra are expressed as neutrons/MeV per 14-MeV neutron incident on the detector with sphere removed, and not neutron/Mev per source neutron into 4π.

Section II is expandable in that new measurements can be incorporated as they become available. Section II will present descriptions of the target materials (geometries, densities, etc.), the measured time spectra corresponding to the various geometries, and the inferred neutron energy spectra.

HIGH-ENERGY SPECTRA

Material	Size	Experiment
Hydrogen	Refer to H_2O and CH_2	
Deuterium	Refer to D_2O	
Lithium-6	0.5	01, 02
Lithium-6	1.1	03
Lithium-6	1.6	04
Lithium-7	0.5	05, 06
Lithium-7	1.0	07
Lithium-7	1.6	08
Beryllium	0.8	09
Carbon	0.5	10, 11
Carbon	1.3	12, 13
Carbon	2.9	14, 15
Nitrogen	1.1	17
Nitrogen	3.1	18
Oxygen	0.7	19
Magnesium	0.7	20, 21
Magnesium	1.2	22
Magnesium	1.9	23
Aluminum	0.9	24, 25

HIGH-ENERGY SPECTRA (Continued)

Material	Size	Experiment
Aluminum	1.6	26
Aluminum	2.6	27
Titanium	1.2	28
Titanium	2.2	29
Titanium	3.5	30
Iron	0.9	31, 32
Iron	2.9	33, 34
Iron	4.8	35, 36
Lead	1.4	37, 38
Water	1.1	39
Water	1.9	40, 41
Heavy Water	1.2	42
Heavy Water	2.1	43
Polyethylene	0.7	44
Polyethylene	1.6	45
Polyethylene	3.0	46
Teflon	0.9	47
Teflon	1.8	48
Teflon	2.9	49, 50
Concrete	2.0	52
Concrete	3.8	54

^{6}Lithium-0.5 m.f.p.

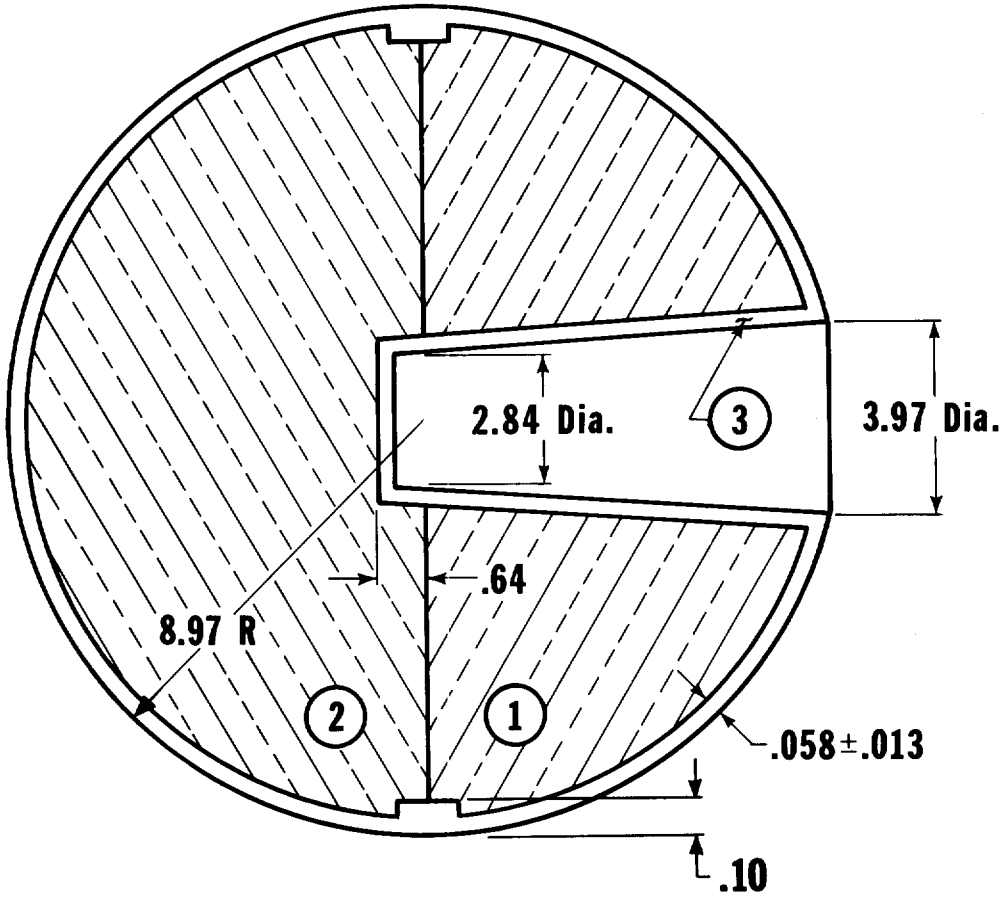

All Dimensions in Centimeters

Zone	Mass in grams	Material
1	629	^{6}Li – 95.0%
2	668	^{7}Li – 5.0%
3	578	Fe – 68.6% Cr – 20.0% Ni – 8.4% Si – 2.0% Mn – 1.0%

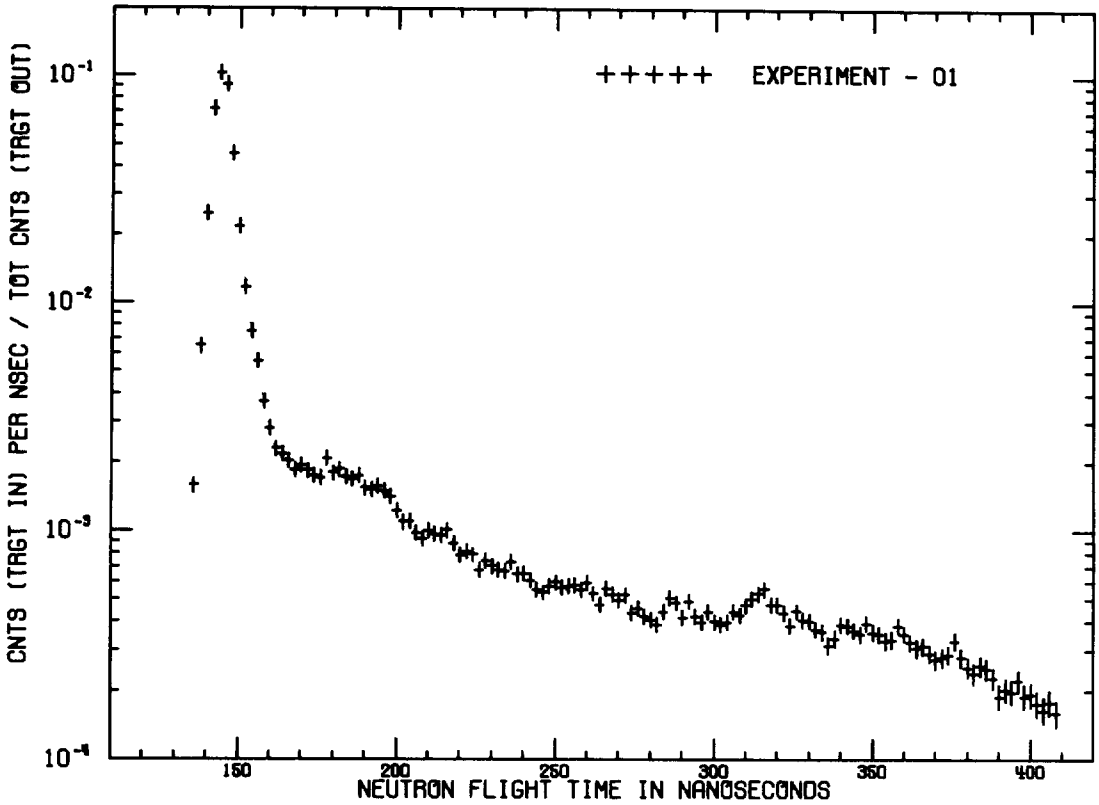

LITHIUM 6 - 0.5 M.F.P. - 30 DEG.

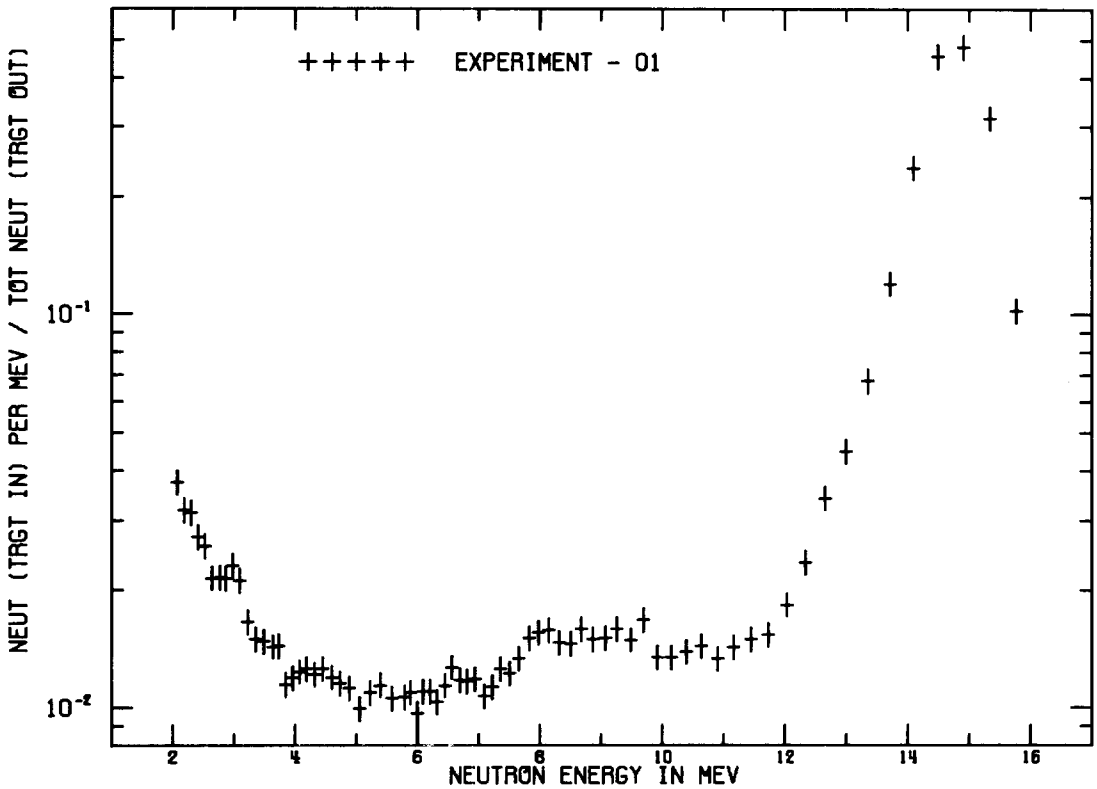

LITHIUM 6 - 0.5 M.F.P. - 30 DEG.

LITHIUM 6 - 0.5 M.F.P. - 30 DEG.
FLIGHTPATH = 765.20 CM DETECTOR = PILOT B FWHM = 4 NS

TIME(NS)	CALCULATED ENERGY(MEV)	CNT/NS/SOURCE	ERROR	INTEGRAL
1.3500E+02	1.7255E+01	2.35225E-04	2.33550E-05	4.70450E-04
1.3700E+02	1.6741E+01	1.57360E-03	4.96985E-05	3.61765E-03
1.3900E+02	1.6250E+01	6.47300E-03	9.75450E-05	1.65637E-02
1.4100E+02	1.5781E+01	2.46225E-02	1.88710E-04	6.58086E-02
1.4300E+02	1.5332E+01	7.17650E-02	3.21560E-04	2.09339E-01
1.4500E+02	1.4902E+01	1.02755E-01	3.84660E-04	4.14849E-01
1.4700E+02	1.4490E+01	9.17600E-02	3.63530E-04	5.98369E-01
1.4900E+02	1.4095E+01	4.52990E-02	2.55625E-04	6.88967E-01
1.5100E+02	1.3716E+01	2.16870E-02	1.77175E-04	7.32341E-01
1.5300E+02	1.3352E+01	1.16900E-02	1.30450E-04	7.55721E-01
1.5500E+02	1.3002E+01	7.47900E-03	1.04695E-04	7.70679E-01
1.5700E+02	1.2666E+01	5.50750E-03	9.01450E-05	7.81694E-01
1.5900E+02	1.2343E+01	3.67580E-03	7.41150E-05	7.89045E-01
1.6100E+02	1.2033E+01	2.79865E-03	6.50500E-05	7.94643E-01
1.6300E+02	1.1734E+01	2.28510E-03	5.91000E-05	7.99213E-01
1.6500E+02	1.1446E+01	2.16775E-03	5.76550E-05	8.03548E-01
1.6700E+02	1.1169E+01	2.01905E-03	5.57700E-05	8.07586E-01
1.6900E+02	1.0901E+01	1.84305E-03	5.34550E-05	8.11272E-01
1.7100E+02	1.0643E+01	1.93565E-03	5.46850E-05	8.15144E-01
1.7300E+02	1.0395E+01	1.82915E-03	5.32650E-05	8.18802E-01
1.7500E+02	1.0154E+01	1.73125E-03	5.19300E-05	8.22265E-01
1.7700E+02	9.9227E+00	1.69080E-03	5.13650E-05	8.25646E-01
1.7900E+02	9.6987E+00	2.06240E-03	5.63250E-05	8.29771E-01
1.8100E+02	9.4824E+00	1.78650E-03	5.26900E-05	8.33344E-01
1.8300E+02	9.2732E+00	1.85265E-03	5.35850E-05	8.37049E-01
1.8500E+02	9.0708E+00	1.71900E-03	5.17600E-05	8.40487E-01
1.8700E+02	8.8751E+00	1.67350E-03	5.11250E-05	8.43834E-01
1.8900E+02	8.6857E+00	1.72870E-03	5.18950E-05	8.47292E-01
1.9100E+02	8.5023E+00	1.53620E-03	4.91545E-05	8.50364E-01
1.9300E+02	8.3246E+00	1.50320E-03	4.86695E-05	8.53370E-01
1.9500E+02	8.1525E+00	1.56805E-03	4.96185E-05	8.56507E-01
1.9700E+02	7.9857E+00	1.49720E-03	4.85805E-05	8.59501E-01
1.9900E+02	7.8240E+00	1.41090E-03	4.72860E-05	8.62323E-01
2.0100E+02	7.6672E+00	1.21910E-03	4.42735E-05	8.64761E-01
2.0300E+02	7.5150E+00	1.09485E-03	4.22085E-05	8.66951E-01
2.0500E+02	7.3674E+00	1.10165E-03	4.23235E-05	8.69154E-01
2.0700E+02	7.2241E+00	9.81450E-04	4.02295E-05	8.71117E-01
2.0900E+02	7.0849E+00	9.20100E-04	3.91185E-05	8.72957E-01
2.1100E+02	6.9498E+00	9.98250E-04	4.05295E-05	8.74954E-01
2.1300E+02	6.8184E+00	9.64500E-04	3.99260E-05	8.76883E-01
2.1500E+02	6.6908E+00	9.52450E-04	3.97085E-05	8.78787E-01
2.1700E+02	6.5668E+00	1.00935E-03	4.07255E-05	8.80806E-01
2.1900E+02	6.4461E+00	8.83400E-04	3.84380E-05	8.82573E-01
2.2100E+02	6.3288E+00	7.80800E-04	3.64680E-05	8.84135E-01
2.2300E+02	6.2147E+00	8.11950E-04	3.70770E-05	8.85758E-01

2.2500E+02	6.1036E+00	7.89100E-04	3.66315E-05	8.87337E-01
2.2700E+02	5.9955E+00	6.75350E-04	3.43265E-05	8.88687E-01
2.2900E+02	5.8903E+00	7.42850E-04	3.57130E-05	8.90173E-01
2.3100E+02	5.7878E+00	7.01650E-04	3.48735E-05	8.91576E-01
2.3300E+02	5.6879E+00	6.75450E-04	3.43290E-05	8.92927E-01
2.3500E+02	5.5907E+00	6.64050E-04	3.40890E-05	8.94255E-01
2.3700E+02	5.4959E+00	7.33350E-04	3.55205E-05	8.95722E-01
2.3900E+02	5.4035E+00	6.46950E-04	3.37265E-05	8.97016E-01
2.4100E+02	5.3134E+00	6.49750E-04	3.37865E-05	8.98315E-01
2.4300E+02	5.2256E+00	6.07150E-04	3.28670E-05	8.99530E-01
2.4500E+02	5.1399E+00	5.51650E-04	3.16295E-05	9.00633E-01
2.4700E+02	5.0564E+00	5.36850E-04	3.12910E-05	9.01707E-01
2.4900E+02	4.9748E+00	5.73950E-04	3.21325E-05	9.02855E-01
2.5100E+02	4.8952E+00	5.96150E-04	3.26250E-05	9.04047E-01
2.5300E+02	4.8175E+00	5.67650E-04	3.19915E-05	9.05182E-01
2.5500E+02	4.7417E+00	5.71950E-04	3.20880E-05	9.06326E-01
2.5700E+02	4.6676E+00	5.76850E-04	3.21980E-05	9.07480E-01
2.5900E+02	4.5953E+00	5.50650E-04	3.16070E-05	9.08581E-01
2.6100E+02	4.5246E+00	5.94500E-04	3.25895E-05	9.09770E-01
2.6300E+02	4.4556E+00	5.30600E-04	3.11480E-05	9.10831E-01
2.6500E+02	4.3881E+00	4.75330E-04	2.98445E-05	9.11782E-01
2.6700E+02	4.3222E+00	5.59400E-04	3.18055E-05	9.12901E-01
2.6900E+02	4.2577E+00	5.26500E-04	3.10535E-05	9.13954E-01
2.7100E+02	4.1947E+00	4.96150E-04	3.03420E-05	9.14946E-01
2.7300E+02	4.1330E+00	5.24250E-04	3.10010E-05	9.15995E-01
2.7500E+02	4.0728E+00	4.35305E-04	2.88645E-05	9.16865E-01
2.7700E+02	4.0138E+00	4.58595E-04	2.94385E-05	9.17782E-01
2.7900E+02	3.9561E+00	4.21930E-04	2.85290E-05	9.18626E-01
2.8100E+02	3.8996E+00	4.07720E-04	2.81690E-05	9.19442E-01
2.8300E+02	3.8443E+00	3.89235E-04	2.76930E-05	9.20220E-01
2.8500E+02	3.7903E+00	4.42930E-04	2.90535E-05	9.21106E-01
2.8700E+02	3.7373E+00	5.07550E-04	3.06115E-05	9.22121E-01
2.8900E+02	3.6854E+00	4.83200E-04	3.00335E-05	9.23088E-01
2.9100E+02	3.6347E+00	4.17880E-04	2.84270E-05	9.23923E-01
2.9300E+02	3.5849E+00	4.89045E-04	3.01735E-05	9.24901E-01
2.9500E+02	3.5362E+00	4.21665E-04	2.85225E-05	9.25745E-01
2.9700E+02	3.4885E+00	3.96285E-04	2.78755E-05	9.26537E-01
2.9900E+02	3.4417E+00	4.41440E-04	2.90170E-05	9.27420E-01
3.0100E+02	3.3959E+00	3.99815E-04	2.79665E-05	9.28220E-01
3.0300E+02	3.3510E+00	3.87835E-04	2.76565E-05	9.28995E-01
3.0500E+02	3.3069E+00	3.97685E-04	2.79115E-05	9.29791E-01
3.0700E+02	3.2638E+00	4.43700E-04	2.90725E-05	9.30678E-01
3.0900E+02	3.2214E+00	4.25085E-04	2.86085E-05	9.31528E-01
3.1100E+02	3.1799E+00	4.70910E-04	2.97380E-05	9.32470E-01
3.1300E+02	3.1392E+00	5.03200E-04	3.05085E-05	9.33477E-01
3.1500E+02	3.0993E+00	5.29500E-04	3.11230E-05	9.34536E-01
3.1700E+02	3.0601E+00	5.54750E-04	3.17005E-05	9.35645E-01
3.1900E+02	3.0217E+00	4.73165E-04	2.97925E-05	9.36591E-01

3.2100E+02	2.9840E+00	4.72215E-04	2.97695E-05	9.37536E-01
3.2300E+02	2.9469E+00	4.35110E-04	2.88595E-05	9.38406E-01
3.2500E+02	2.9106E+00	3.85665E-04	2.76005E-05	9.39177E-01
3.2700E+02	2.8750E+00	4.45030E-04	2.91055E-05	9.40067E-01
3.2900E+02	2.8399E+00	4.06250E-04	2.81315E-05	9.40880E-01
3.3100E+02	2.8056E+00	4.01630E-04	2.80130E-05	9.41683E-01
3.3300E+02	2.7718E+00	3.72195E-04	2.72470E-05	9.42428E-01
3.3500E+02	2.7387E+00	3.62370E-04	2.69865E-05	9.43152E-01
3.3700E+02	2.7061E+00	3.15260E-04	2.57010E-05	9.43783E-01
3.3900E+02	2.6742E+00	3.37810E-04	2.63240E-05	9.44459E-01
3.4100E+02	2.6428E+00	3.89795E-04	2.77075E-05	9.45238E-01
3.4300E+02	2.6119E+00	3.84105E-04	2.75595E-05	9.46006E-01
3.4500E+02	2.5816E+00	3.66665E-04	2.71010E-05	9.46740E-01
3.4700E+02	2.5518E+00	3.51760E-04	2.67025E-05	9.47443E-01
3.4900E+02	2.5225E+00	3.93115E-04	2.77935E-05	9.48229E-01
3.5100E+02	2.4937E+00	3.59175E-04	2.69015E-05	9.48948E-01
3.5300E+02	2.4654E+00	3.53255E-04	2.67425E-05	9.49654E-01
3.5500E+02	2.4376E+00	3.30795E-04	2.61320E-05	9.50316E-01
3.5700E+02	2.4103E+00	3.34190E-04	2.62250E-05	9.50984E-01
3.5900E+02	2.3834E+00	3.85695E-04	2.76010E-05	9.51756E-01
3.6100E+02	2.3570E+00	3.54695E-04	2.67815E-05	9.52465E-01
3.6300E+02	2.3310E+00	3.25350E-04	2.59815E-05	9.53116E-01
3.6500E+02	2.3054E+00	3.06685E-04	2.54600E-05	9.53729E-01
3.6700E+02	2.2803E+00	3.12740E-04	2.56305E-05	9.54355E-01
3.6900E+02	2.2555E+00	2.90835E-04	2.50085E-05	9.54936E-01
3.7100E+02	2.2312E+00	2.72810E-04	2.44845E-05	9.55482E-01
3.7300E+02	2.2072E+00	2.78870E-04	2.46620E-05	9.56040E-01
3.7500E+02	2.1837E+00	2.87335E-04	2.49075E-05	9.56614E-01
3.7700E+02	2.1605E+00	3.29630E-04	2.61000E-05	9.57274E-01
3.7900E+02	2.1377E+00	2.78550E-04	2.46525E-05	9.57831E-01
3.8100E+02	2.1152E+00	2.52135E-04	2.38700E-05	9.58335E-01
3.8300E+02	2.0931E+00	2.38510E-04	2.34560E-05	9.58812E-01
3.8500E+02	2.0713E+00	2.56440E-04	2.39990E-05	9.59325E-01
3.8700E+02	2.0499E+00	2.48125E-04	2.37485E-05	9.59821E-01
3.8900E+02	2.0288E+00	2.25985E-04	2.30685E-05	9.60273E-01
3.9100E+02	2.0080E+00	1.89080E-04	2.18885E-05	9.60651E-01
3.9300E+02	1.9876E+00	2.02550E-04	2.23265E-05	9.61056E-01
3.9500E+02	1.9675E+00	1.98095E-04	2.21825E-05	9.61452E-01
3.9700E+02	1.9476E+00	2.20275E-04	2.28900E-05	9.61893E-01
3.9900E+02	1.9281E+00	1.88275E-04	2.18620E-05	9.62270E-01
4.0100E+02	1.9088E+00	1.91540E-04	2.19690E-05	9.62653E-01
4.0300E+02	1.8899E+00	1.74990E-04	2.14205E-05	9.63003E-01
4.0500E+02	1.8712E+00	1.64060E-04	2.10505E-05	9.63331E-01
4.0700E+02	1.8528E+00	1.78225E-04	2.15290E-05	9.63687E-01
4.0900E+02	1.8347E+00	1.59310E-04	2.08875E-05	9.64006E-01

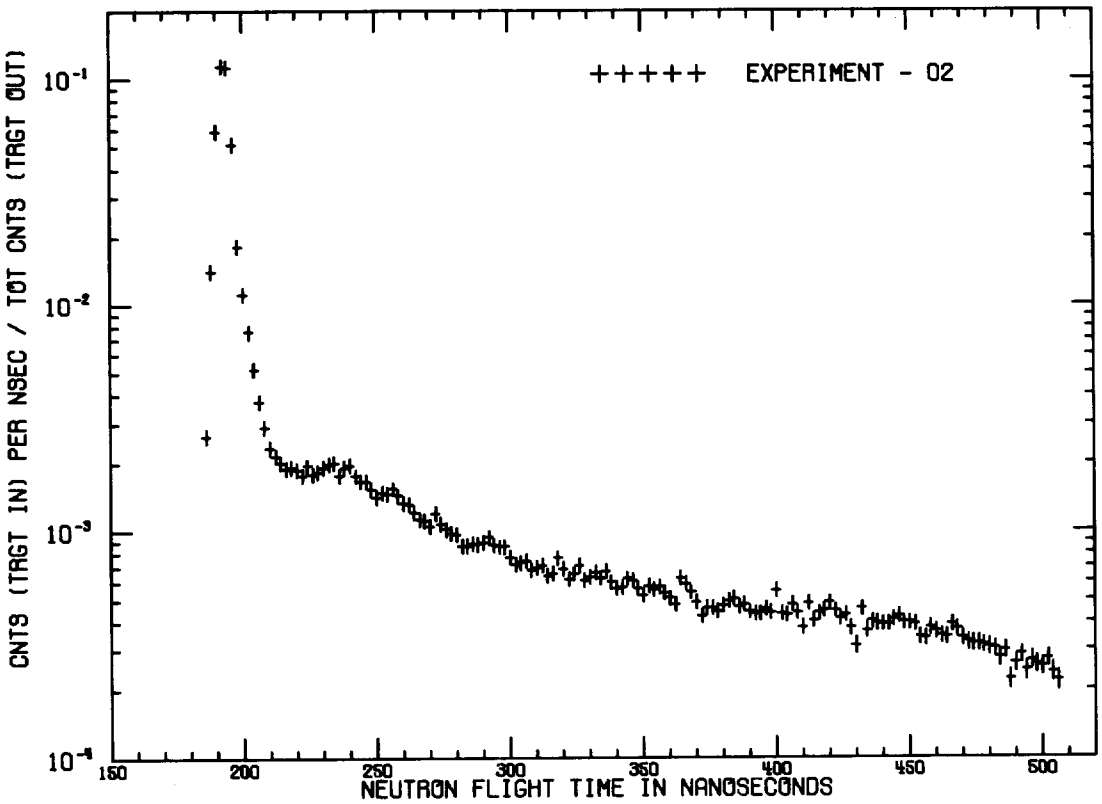

LITHIUM 6 - 0.5 M.F.P. - 120 DEG.

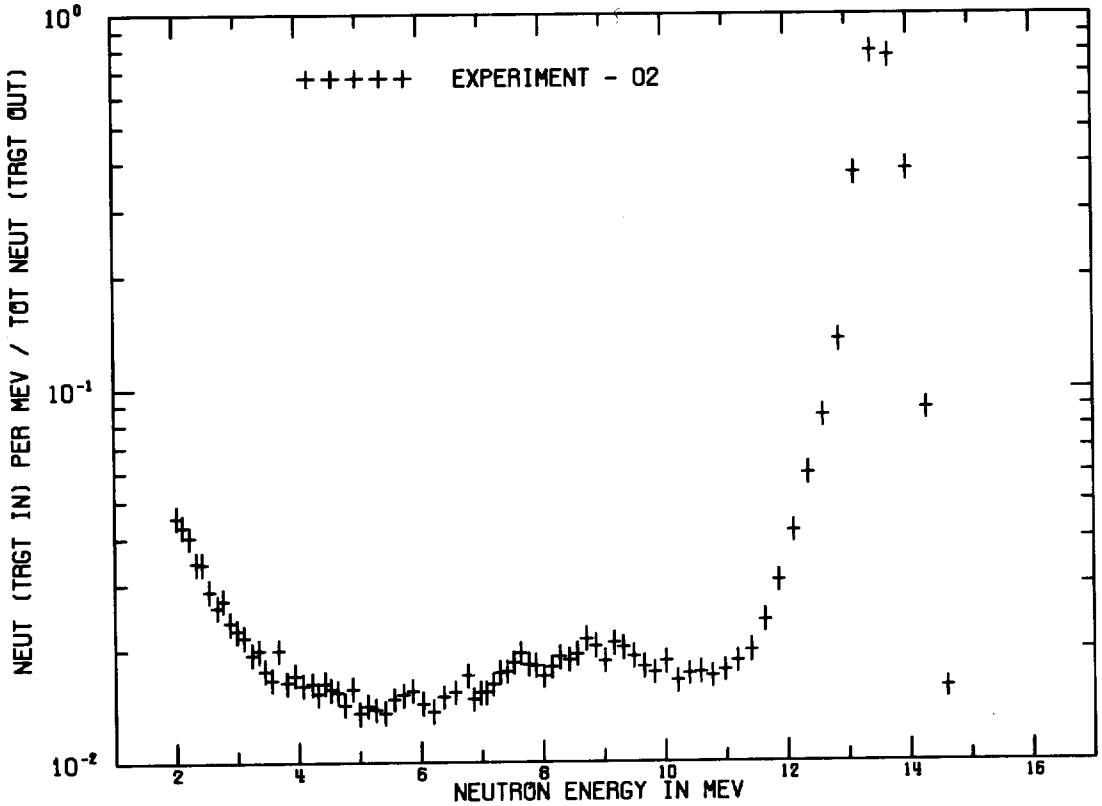

LITHIUM 6 - 0.5 M.F.P. - 120 DEG.

LITHIUM 6 - 0.5 M.F.P. - 120 DEG.
FLIGHTPATH = 977.20 CM DETECTOR = NE213 FWHM = 4 NS

TIME(NS)	CALCULATED ENERGY(MEV)	CNT/NS/SOURCE	ERROR	INTEGRAL
1.8500E+02	1.4930E+01	3.75870E-04	2.74585E-05	7.51740E-04
1.8700E+02	1.4605E+01	2.62495E-03	7.07250E-05	6.00164E-03
1.8900E+02	1.4291E+01	1.40525E-02	1.63045E-04	3.41066E-02
1.9100E+02	1.3986E+01	5.88500E-02	3.33460E-04	1.51807E-01
1.9300E+02	1.3692E+01	1.13930E-01	4.63915E-04	3.79667E-01
1.9500E+02	1.3406E+01	1.13295E-01	4.62620E-04	6.06257E-01
1.9700E+02	1.3130E+01	5.17350E-02	3.12650E-04	7.09727E-01
1.9900E+02	1.2862E+01	1.80900E-02	1.84960E-04	7.45907E-01
2.0100E+02	1.2602E+01	1.10700E-02	1.44745E-04	7.68047E-01
2.0300E+02	1.2350E+01	7.58850E-03	1.19900E-04	7.83224E-01
2.0500E+02	1.2105E+01	5.19100E-03	9.92350E-05	7.93606E-01
2.0700E+02	1.1868E+01	3.74940E-03	8.44100E-05	8.01104E-01
2.0900E+02	1.1638E+01	2.87700E-03	7.40100E-05	8.06858E-01
2.1100E+02	1.1414E+01	2.34855E-03	6.69300E-05	8.11556E-01
2.1300E+02	1.1197E+01	2.15895E-03	6.42000E-05	8.15873E-01
2.1500E+02	1.0986E+01	2.00750E-03	6.19300E-05	8.19888E-01
2.1700E+02	1.0781E+01	1.90300E-03	6.03150E-05	8.23694E-01
2.1900E+02	1.0582E+01	1.91685E-03	6.05350E-05	8.27528E-01
2.2100E+02	1.0388E+01	1.86800E-03	5.97650E-05	8.31264E-01
2.2300E+02	1.0199E+01	1.75875E-03	5.80150E-05	8.34782E-01
2.2500E+02	1.0016E+01	1.94845E-03	6.10250E-05	8.38679E-01
2.2700E+02	9.8374E+00	1.78865E-03	5.85000E-05	8.42256E-01
2.2900E+02	9.6637E+00	1.82765E-03	5.91250E-05	8.45911E-01
2.3100E+02	9.4946E+00	1.91610E-03	6.05200E-05	8.49743E-01
2.3300E+02	9.3298E+00	1.98080E-03	6.15250E-05	8.53705E-01
2.3500E+02	9.1694E+00	2.00250E-03	6.18550E-05	8.57710E-01
2.3700E+02	9.0131E+00	1.77345E-03	5.82550E-05	8.61257E-01
2.3900E+02	8.8607E+00	1.90875E-03	6.04050E-05	8.65074E-01
2.4100E+02	8.7122E+00	1.96005E-03	6.12050E-05	8.68994E-01
2.4300E+02	8.5674E+00	1.75770E-03	5.80000E-05	8.72510E-01
2.4500E+02	8.4262E+00	1.66920E-03	5.65400E-05	8.75848E-01
2.4700E+02	8.2885E+00	1.66205E-03	5.64200E-05	8.79172E-01
2.4900E+02	8.1542E+00	1.52760E-03	5.41200E-05	8.82228E-01
2.5100E+02	8.0231E+00	1.41205E-03	5.20650E-05	8.85052E-01
2.5300E+02	7.8952E+00	1.48485E-03	5.33700E-05	8.88021E-01
2.5500E+02	7.7703E+00	1.46190E-03	5.29650E-05	8.90945E-01
2.5700E+02	7.6483E+00	1.54535E-03	5.44300E-05	8.94036E-01
2.5900E+02	7.5292E+00	1.43930E-03	5.25600E-05	8.96914E-01
2.6100E+02	7.4129E+00	1.33560E-03	5.06600E-05	8.99586E-01
2.6300E+02	7.2993E+00	1.31345E-03	5.02450E-05	9.02213E-01
2.6500E+02	7.1883E+00	1.21110E-03	4.82850E-05	9.04635E-01
2.6700E+02	7.0798E+00	1.13290E-03	4.67305E-05	9.06901E-01
2.6900E+02	6.9737E+00	1.11375E-03	4.63420E-05	9.09128E-01
2.7100E+02	6.8700E+00	1.05080E-03	4.50415E-05	9.11230E-01
2.7300E+02	6.7687E+00	1.19540E-03	4.79770E-05	9.13620E-01

2.7500E+02	6.6695E+00	1.07820E-03	4.56120E-05	9.15777E-01
2.7700E+02	6.5725E+00	1.02405E-03	4.44765E-05	9.17825E-01
2.7900E+02	6.4777E+00	9.85600E-04	4.36530E-05	9.19796E-01
2.8100E+02	6.3849E+00	9.72000E-04	4.33575E-05	9.21740E-01
2.8300E+02	6.2940E+00	8.63550E-04	4.09270E-05	9.23467E-01
2.8500E+02	6.2051E+00	8.63450E-04	4.09245E-05	9.25194E-01
2.8700E+02	6.1181E+00	8.81300E-04	4.13345E-05	9.26957E-01
2.8900E+02	6.0329E+00	8.79650E-04	4.12970E-05	9.28716E-01
2.9100E+02	5.9495E+00	8.97300E-04	4.16985E-05	9.30511E-01
2.9300E+02	5.8678E+00	9.44350E-04	4.27515E-05	9.32399E-01
2.9500E+02	5.7877E+00	8.70400E-04	4.10850E-05	9.34140E-01
2.9700E+02	5.7093E+00	8.59750E-04	4.08395E-05	9.35860E-01
2.9900E+02	5.6325E+00	8.58400E-04	4.08080E-05	9.37576E-01
3.0100E+02	5.5573E+00	7.68050E-04	3.86605E-05	9.39113E-01
3.0300E+02	5.4835E+00	7.14200E-04	3.73225E-05	9.40541E-01
3.0500E+02	5.4112E+00	7.28450E-04	3.76810E-05	9.41998E-01
3.0700E+02	5.3403E+00	7.44300E-04	3.80760E-05	9.43486E-01
3.0900E+02	5.2708E+00	6.75900E-04	3.63400E-05	9.44838E-01
3.1100E+02	5.2027E+00	6.92200E-04	3.67615E-05	9.46223E-01
3.1300E+02	5.1359E+00	7.09500E-04	3.72030E-05	9.47642E-01
3.1500E+02	5.0703E+00	6.40200E-04	3.54010E-05	9.48922E-01
3.1700E+02	5.0061E+00	6.51350E-04	3.56970E-05	9.50225E-01
3.1900E+02	4.9430E+00	7.64500E-04	3.85745E-05	9.51754E-01
3.2100E+02	4.8811E+00	6.83250E-04	3.65310E-05	9.53120E-01
3.2300E+02	4.8204E+00	6.13100E-04	3.46695E-05	9.54346E-01
3.2500E+02	4.7608E+00	6.49300E-04	3.56425E-05	9.55645E-01
3.2700E+02	4.7023E+00	7.07700E-04	3.71585E-05	9.57060E-01
3.2900E+02	4.6449E+00	6.10000E-04	3.45855E-05	9.58280E-01
3.3100E+02	4.5885E+00	6.28450E-04	3.50865E-05	9.59537E-01
3.3300E+02	4.5331E+00	6.59650E-04	3.59160E-05	9.60857E-01
3.3500E+02	4.4788E+00	6.21800E-04	3.49060E-05	9.62100E-01
3.3700E+02	4.4254E+00	6.66300E-04	3.60905E-05	9.63433E-01
3.3900E+02	4.3730E+00	5.97050E-04	3.42305E-05	9.64627E-01
3.4100E+02	4.3215E+00	5.58050E-04	3.31365E-05	9.65743E-01
3.4300E+02	4.2709E+00	5.68200E-04	3.34245E-05	9.66879E-01
3.4500E+02	4.2212E+00	6.19150E-04	3.48350E-05	9.68118E-01
3.4700E+02	4.1723E+00	6.06800E-04	3.44975E-05	9.69331E-01
3.4900E+02	4.1243E+00	5.59300E-04	3.31730E-05	9.70450E-01
3.5100E+02	4.0772E+00	5.22600E-04	3.21110E-05	9.71495E-01
3.5300E+02	4.0308E+00	5.72700E-04	3.35515E-05	9.72641E-01
3.5500E+02	3.9852E+00	5.53300E-04	3.30010E-05	9.73747E-01
3.5700E+02	3.9404E+00	5.70100E-04	3.34790E-05	9.74887E-01
3.5900E+02	3.8964E+00	5.34800E-04	3.24680E-05	9.75957E-01
3.6100E+02	3.8530E+00	5.06550E-04	3.16350E-05	9.76970E-01
3.6300E+02	3.8104E+00	4.77555E-04	3.07575E-05	9.77925E-01
3.6500E+02	3.7686E+00	6.24300E-04	3.49745E-05	9.79174E-01
3.6700E+02	3.7273E+00	5.85850E-04	3.39200E-05	9.80345E-01
3.6900E+02	3.6868E+00	5.38500E-04	3.25745E-05	9.81422E-01

3.7100E+02	3.6469E+00	4.87585E-04	3.10640E-05	9.82398E-01
3.7300E+02	3.6077E+00	4.24770E-04	2.90920E-05	9.83247E-01
3.7500E+02	3.5691E+00	4.59140E-04	3.01870E-05	9.84165E-01
3.7700E+02	3.5311E+00	4.57135E-04	3.01240E-05	9.85080E-01
3.7900E+02	3.4938E+00	4.42000E-04	2.96460E-05	9.85964E-01
3.8100E+02	3.4570E+00	4.70370E-04	3.05360E-05	9.86904E-01
3.8300E+02	3.4208E+00	4.91995E-04	3.11980E-05	9.87888E-01
3.8500E+02	3.3851E+00	5.04900E-04	3.15860E-05	9.88898E-01
3.8700E+02	3.3500E+00	4.64645E-04	3.03585E-05	9.89828E-01
3.8900E+02	3.3155E+00	4.76515E-04	3.07255E-05	9.90781E-01
3.9100E+02	3.2815E+00	4.41130E-04	2.96180E-05	9.91663E-01
3.9300E+02	3.2480E+00	4.31055E-04	2.92950E-05	9.92525E-01
3.9500E+02	3.2150E+00	4.35570E-04	2.94405E-05	9.93396E-01
3.9700E+02	3.1825E+00	4.55060E-04	3.00590E-05	9.94306E-01
3.9900E+02	3.1506E+00	4.38260E-04	2.95265E-05	9.95183E-01
4.0100E+02	3.1191E+00	5.45800E-04	3.27865E-05	9.96274E-01
4.0300E+02	3.0880E+00	4.33300E-04	2.93675E-05	9.97141E-01
4.0500E+02	3.0575E+00	4.29080E-04	2.92315E-05	9.97999E-01
4.0700E+02	3.0273E+00	4.75100E-04	3.06820E-05	9.98949E-01
4.0900E+02	2.9977E+00	4.38035E-04	2.95190E-05	9.99825E-01
4.1100E+02	2.9684E+00	3.77500E-04	2.75145E-05	1.00058E+00
4.1300E+02	2.9396E+00	4.80405E-04	3.08450E-05	1.00154E+00
4.1500E+02	2.9112E+00	4.02265E-04	2.83520E-05	1.00235E+00
4.1700E+02	2.8832E+00	4.35810E-04	2.94480E-05	1.00322E+00
4.1900E+02	2.8556E+00	4.50120E-04	2.99035E-05	1.00412E+00
4.2100E+02	2.8284E+00	4.83865E-04	3.09505E-05	1.00509E+00
4.2300E+02	2.8016E+00	4.46425E-04	2.97865E-05	1.00598E+00
4.2500E+02	2.7752E+00	4.13180E-04	2.87130E-05	1.00680E+00
4.2700E+02	2.7492E+00	4.29770E-04	2.92535E-05	1.00766E+00
4.2900E+02	2.7235E+00	3.74120E-04	2.73985E-05	1.00841E+00
4.3100E+02	2.6982E+00	3.11365E-04	2.51425E-05	1.00903E+00
4.3300E+02	2.6732E+00	4.56370E-04	3.01000E-05	1.00995E+00
4.3500E+02	2.6486E+00	3.64795E-04	2.70750E-05	1.01068E+00
4.3700E+02	2.6243E+00	4.00860E-04	2.83050E-05	1.01148E+00
4.3900E+02	2.6003E+00	3.92140E-04	2.80125E-05	1.01226E+00
4.4100E+02	2.5767E+00	3.88565E-04	2.78920E-05	1.01304E+00
4.4300E+02	2.5534E+00	3.89030E-04	2.79075E-05	1.01382E+00
4.4500E+02	2.5304E+00	4.09795E-04	2.86015E-05	1.01464E+00
4.4700E+02	2.5077E+00	4.22470E-04	2.90170E-05	1.01548E+00
4.4900E+02	2.4853E+00	3.96510E-04	2.81595E-05	1.01628E+00
4.5100E+02	2.4632E+00	3.96440E-04	2.81570E-05	1.01707E+00
4.5300E+02	2.4414E+00	3.89455E-04	2.79220E-05	1.01785E+00
4.5500E+02	2.4199E+00	3.41080E-04	2.62350E-05	1.01853E+00
4.5700E+02	2.3987E+00	3.37605E-04	2.61095E-05	1.01921E+00
4.5900E+02	2.3778E+00	3.74535E-04	2.74130E-05	1.01995E+00
4.6100E+02	2.3571E+00	3.61890E-04	2.69735E-05	1.02068E+00
4.6300E+02	2.3367E+00	3.46420E-04	2.64265E-05	1.02137E+00
4.6500E+02	2.3166E+00	3.41040E-04	2.62335E-05	1.02205E+00

4.6700E+02	2.2967E+00	3.88000E-04	2.78725E-05	1.02283E+00
4.6900E+02	2.2771E+00	3.71100E-04	2.72940E-05	1.02357E+00
4.7100E+02	2.2577E+00	3.37665E-04	2.61115E-05	1.02425E+00
4.7300E+02	2.2386E+00	3.24585E-04	2.56345E-05	1.02490E+00
4.7500E+02	2.2197E+00	3.18915E-04	2.54245E-05	1.02553E+00
4.7700E+02	2.2011E+00	3.19150E-04	2.54335E-05	1.02617E+00
4.7900E+02	2.1827E+00	3.14440E-04	2.52580E-05	1.02680E+00
4.8100E+02	2.1645E+00	3.08920E-04	2.50505E-05	1.02742E+00
4.8300E+02	2.1466E+00	3.02605E-04	2.48115E-05	1.02802E+00
4.8500E+02	2.1288E+00	2.76370E-04	2.37920E-05	1.02858E+00
4.8700E+02	2.1113E+00	2.97885E-04	2.46310E-05	1.02917E+00
4.8900E+02	2.0940E+00	2.21430E-04	2.15010E-05	1.02962E+00
4.9100E+02	2.0770E+00	2.60600E-04	2.31575E-05	1.03014E+00
4.9300E+02	2.0601E+00	2.85390E-04	2.41475E-05	1.03071E+00
4.9500E+02	2.0434E+00	2.42435E-04	2.24045E-05	1.03119E+00
4.9700E+02	2.0270E+00	2.68650E-04	2.34835E-05	1.03173E+00
4.9900E+02	2.0107E+00	2.57850E-04	2.30450E-05	1.03224E+00
5.0100E+02	1.9946E+00	2.51380E-04	2.27785E-05	1.03275E+00
5.0300E+02	1.9787E+00	2.75200E-04	2.37455E-05	1.03330E+00
5.0500E+02	1.9630E+00	2.37990E-04	2.22165E-05	1.03377E+00
5.0700E+02	1.9475E+00	2.18485E-04	2.13715E-05	1.03421E+00

^{6}Lithium-1.1 m.f.p.

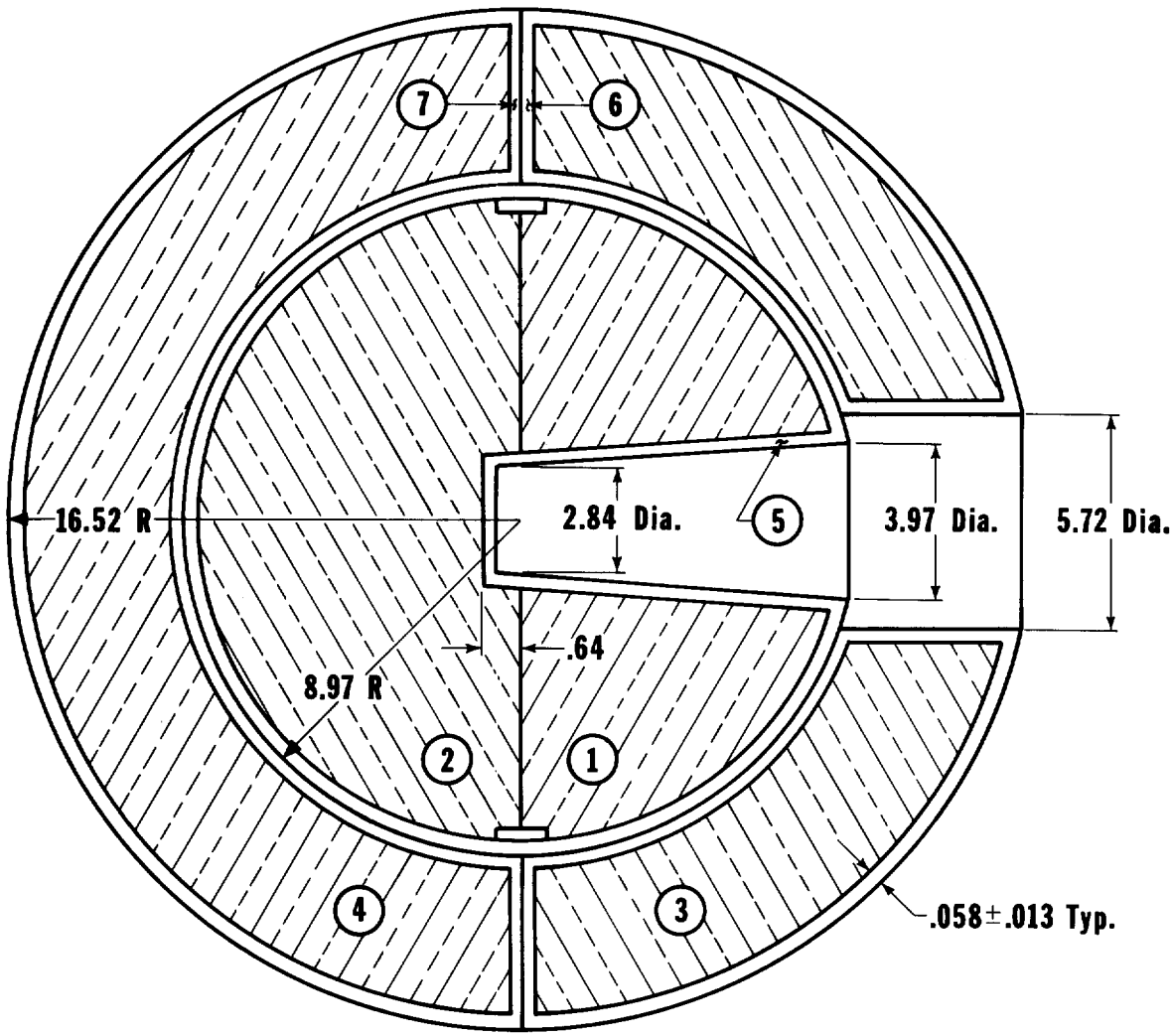

All Dimensions in Centimeters

zone	Mass in grams	Material
1	629	^{6}Li – 95.0%
2	668	
3	3337	^{7}Li – 5.0%
4	3450	
		Fe – 68.6%
5	578	Cr – 20.0%
6	2930	Ni – 8.4%
7	2871	Si – 2.0%
		Mn – 1.0%

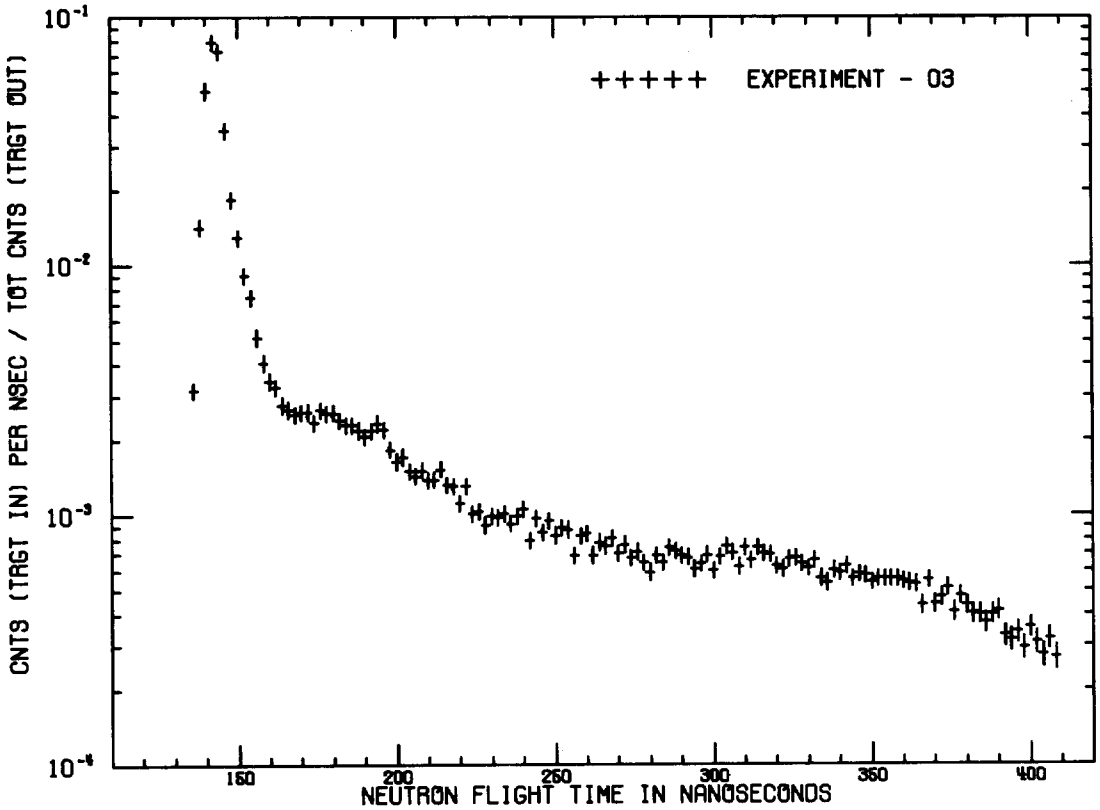

LITHIUM 6 - 1.1 M.F.P. - 30 DEG.

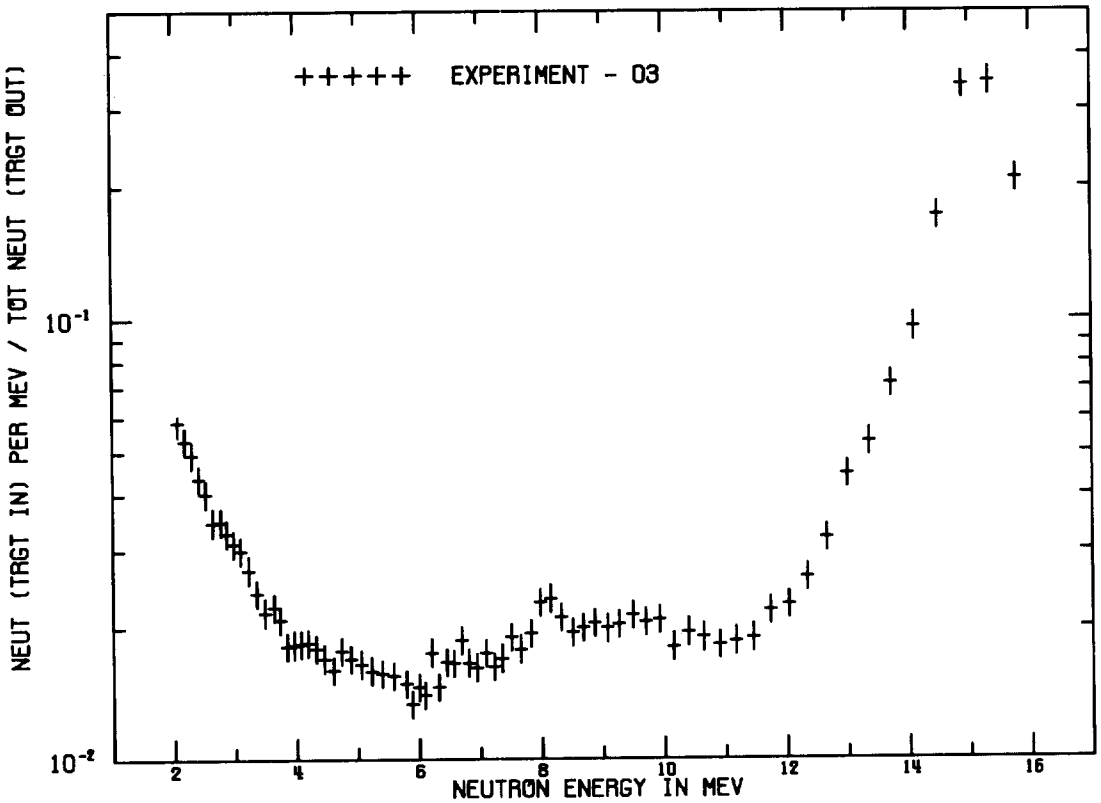

LITHIUM 6 - 1.1 M.F.P. - 30 DEG.

LITHIUM 6 - 1.1 M.F.P. - 30 DEG.
FLIGHTPATH = 765.20 CM DETECTOR = PILOT B FWHM = 4 NS

TIME(NS)	CALCULATED ENERGY(MEV)	CNT/NS/SOURCE	ERROR	INTEGRAL
1.3500E+02	1.7255E+01	4.98275E-04	3.67225E-05	9.96550E-04
1.3700E+02	1.6741E+01	3.15165E-03	8.39550E-05	7.29985E-03
1.3900E+02	1.6250E+01	1.41850E-02	1.75360E-04	3.56698E-02
1.4100E+02	1.5781E+01	5.02150E-02	3.28865E-04	1.36100E-01
1.4300E+02	1.5332E+01	7.88500E-02	4.11900E-04	2.93800E-01
1.4500E+02	1.4902E+01	7.27850E-02	3.95770E-04	4.39370E-01
1.4700E+02	1.4490E+01	3.47865E-02	2.73875E-04	5.08943E-01
1.4900E+02	1.4095E+01	1.83900E-02	1.99460E-04	5.45723E-01
1.5100E+02	1.3716E+01	1.29100E-02	1.67365E-04	5.71543E-01
1.5300E+02	1.3352E+01	9.13350E-03	1.41060E-04	5.89810E-01
1.5500E+02	1.3002E+01	7.43400E-03	1.27465E-04	6.04678E-01
1.5700E+02	1.2666E+01	5.14750E-03	1.06470E-04	6.14973E-01
1.5900E+02	1.2343E+01	4.07565E-03	9.50450E-05	6.23124E-01
1.6100E+02	1.2033E+01	3.43710E-03	8.75300E-05	6.29998E-01
1.6300E+02	1.1734E+01	3.24695E-03	8.51650E-05	6.36492E-01
1.6500E+02	1.1446E+01	2.74875E-03	7.86300E-05	6.41990E-01
1.6700E+02	1.1169E+01	2.63090E-03	7.70050E-05	6.47252E-01
1.6900E+02	1.0901E+01	2.51545E-03	7.53800E-05	6.52282E-01
1.7100E+02	1.0643E+01	2.56225E-03	7.60400E-05	6.57407E-01
1.7300E+02	1.0395E+01	2.57965E-03	7.62850E-05	6.62566E-01
1.7500E+02	1.0154E+01	2.33235E-03	7.27200E-05	6.67231E-01
1.7700E+02	9.9227E+00	2.62780E-03	7.69600E-05	6.72487E-01
1.7900E+02	9.6987E+00	2.53080E-03	7.55950E-05	6.77548E-01
1.8100E+02	9.4824E+00	2.55720E-03	7.59700E-05	6.82663E-01
1.8300E+02	9.2732E+00	2.38055E-03	7.34300E-05	6.87424E-01
1.8500E+02	9.0708E+00	2.27845E-03	7.19200E-05	6.91981E-01
1.8700E+02	8.8751E+00	2.28425E-03	7.20100E-05	6.96549E-01
1.8900E+02	8.6857E+00	2.17395E-03	7.03450E-05	7.00897E-01
1.9100E+02	8.5023E+00	2.05555E-03	6.85100E-05	7.05008E-01
1.9300E+02	8.3246E+00	2.15925E-03	7.01200E-05	7.09327E-01
1.9500E+02	8.1525E+00	2.31520E-03	7.24700E-05	7.13957E-01
1.9700E+02	7.9857E+00	2.19285E-03	7.06300E-05	7.18343E-01
1.9900E+02	7.8240E+00	1.81640E-03	6.46550E-05	7.21975E-01
2.0100E+02	7.6672E+00	1.63020E-03	6.14850E-05	7.25236E-01
2.0300E+02	7.5150E+00	1.70150E-03	6.27150E-05	7.28639E-01
2.0500E+02	7.3674E+00	1.49460E-03	5.90650E-05	7.31628E-01
2.0700E+02	7.2241E+00	1.42150E-03	5.77200E-05	7.34471E-01
2.0900E+02	7.0849E+00	1.50135E-03	5.91900E-05	7.37474E-01
2.1100E+02	6.9498E+00	1.36825E-03	5.67250E-05	7.40210E-01
2.1300E+02	6.8184E+00	1.37685E-03	5.68850E-05	7.42964E-01
2.1500E+02	6.6908E+00	1.51600E-03	5.94550E-05	7.45996E-01
2.1700E+02	6.5668E+00	1.31630E-03	5.57300E-05	7.48629E-01
2.1900E+02	6.4461E+00	1.29750E-03	5.53650E-05	7.51224E-01
2.2100E+02	6.3288E+00	1.10865E-03	5.15750E-05	7.53441E-01
2.2300E+02	6.2147E+00	1.29715E-03	5.53600E-05	7.56035E-01

2.2500E+02	6.1036E+00	1.00530E-03	4.93735E-05	7.58046E-01
2.2700E+02	5.9955E+00	1.02425E-03	4.97845E-05	7.60094E-01
2.2900E+02	5.8903E+00	9.07350E-04	4.71950E-05	7.61909E-01
2.3100E+02	5.7878E+00	9.84700E-04	4.89235E-05	7.63878E-01
2.3300E+02	5.6879E+00	9.73050E-04	4.86675E-05	7.65824E-01
2.3500E+02	5.5907E+00	1.00675E-03	4.94050E-05	7.67838E-01
2.3700E+02	5.4959E+00	9.20000E-04	4.74820E-05	7.69678E-01
2.3900E+02	5.4035E+00	9.84450E-04	4.89180E-05	7.71647E-01
2.4100E+02	5.3134E+00	1.04885E-03	5.03150E-05	7.73745E-01
2.4300E+02	5.2256E+00	7.88250E-04	4.44015E-05	7.75321E-01
2.4500E+02	5.1399E+00	9.65650E-04	4.85035E-05	7.77252E-01
2.4700E+02	5.0564E+00	8.45600E-04	4.57680E-05	7.78944E-01
2.4900E+02	4.9748E+00	9.43300E-04	4.80065E-05	7.80830E-01
2.5100E+02	4.8952E+00	8.24750E-04	4.52750E-05	7.82480E-01
2.5300E+02	4.8175E+00	8.86250E-04	4.67120E-05	7.84252E-01
2.5500E+02	4.7417E+00	8.70600E-04	4.63510E-05	7.85993E-01
2.5700E+02	4.6676E+00	6.87800E-04	4.19015E-05	7.87369E-01
2.5900E+02	4.5953E+00	8.20950E-04	4.51855E-05	7.89011E-01
2.6100E+02	4.5246E+00	8.38350E-04	4.55970E-05	7.90688E-01
2.6300E+02	4.4556E+00	6.88950E-04	4.19305E-05	7.92065E-01
2.6500E+02	4.3881E+00	7.74350E-04	4.40635E-05	7.93614E-01
2.6700E+02	4.3222E+00	7.49550E-04	4.34550E-05	7.95113E-01
2.6900E+02	4.2577E+00	8.03150E-04	4.47600E-05	7.96720E-01
2.7100E+02	4.1947E+00	7.00500E-04	4.22255E-05	7.98121E-01
2.7300E+02	4.1330E+00	7.57300E-04	4.36460E-05	7.99635E-01
2.7500E+02	4.0728E+00	6.71150E-04	4.14725E-05	8.00977E-01
2.7700E+02	4.0138E+00	7.11100E-04	4.24945E-05	8.02400E-01
2.7900E+02	3.9561E+00	6.44500E-04	4.07760E-05	8.03689E-01
2.8100E+02	3.8996E+00	5.87400E-04	3.92425E-05	8.04863E-01
2.8300E+02	3.8443E+00	6.84500E-04	4.18170E-05	8.06232E-01
2.8500E+02	3.7903E+00	6.43050E-04	4.07370E-05	8.07519E-01
2.8700E+02	3.7373E+00	7.38350E-04	4.31770E-05	8.08995E-01
2.8900E+02	3.6854E+00	7.15350E-04	4.26010E-05	8.10426E-01
2.9100E+02	3.6347E+00	6.87150E-04	4.18835E-05	8.11800E-01
2.9300E+02	3.5849E+00	6.74950E-04	4.15695E-05	8.13150E-01
2.9500E+02	3.5362E+00	6.06000E-04	3.97485E-05	8.14362E-01
2.9700E+02	3.4885E+00	6.36300E-04	4.05600E-05	8.15635E-01
2.9900E+02	3.4417E+00	6.89350E-04	4.19405E-05	8.17013E-01
3.0100E+02	3.3959E+00	5.98700E-04	3.95510E-05	8.18211E-01
3.0300E+02	3.3510E+00	6.76100E-04	4.15995E-05	8.19563E-01
3.0500E+02	3.3069E+00	7.47800E-04	4.34120E-05	8.21059E-01
3.0700E+02	3.2638E+00	7.04300E-04	4.23215E-05	8.22467E-01
3.0900E+02	3.2214E+00	6.19450E-04	4.01115E-05	8.23706E-01
3.1100E+02	3.1799E+00	7.40700E-04	4.32360E-05	8.25188E-01
3.1300E+02	3.1392E+00	6.55000E-04	4.10515E-05	8.26498E-01
3.1500E+02	3.0993E+00	7.37650E-04	4.31605E-05	8.27973E-01
3.1700E+02	3.0601E+00	7.01800E-04	4.22580E-05	8.29376E-01
3.1900E+02	3.0217E+00	6.94150E-04	4.20630E-05	8.30765E-01

3.2100E+02	2.9840E+00	6.24950E-04	4.02570E-05	8.32015E-01
3.2300E+02	2.9469E+00	6.05550E-04	3.97365E-05	8.33226E-01
3.2500E+02	2.9106E+00	6.63650E-04	4.12775E-05	8.34553E-01
3.2700E+02	2.8750E+00	6.71500E-04	4.14810E-05	8.35896E-01
3.2900E+02	2.8399E+00	6.35350E-04	4.05345E-05	8.37167E-01
3.3100E+02	2.8056E+00	6.11250E-04	3.98905E-05	8.38389E-01
3.3300E+02	2.7718E+00	6.57950E-04	4.11280E-05	8.39705E-01
3.3500E+02	2.7387E+00	5.56400E-04	3.83845E-05	8.40818E-01
3.3700E+02	2.7061E+00	5.32850E-04	3.77205E-05	8.41884E-01
3.3900E+02	2.6742E+00	5.99850E-04	3.95830E-05	8.43083E-01
3.4100E+02	2.6428E+00	5.82450E-04	3.91070E-05	8.44248E-01
3.4300E+02	2.6119E+00	6.24750E-04	4.02525E-05	8.45498E-01
3.4500E+02	2.5816E+00	5.52400E-04	3.82725E-05	8.46603E-01
3.4700E+02	2.5518E+00	5.78000E-04	3.89850E-05	8.47759E-01
3.4900E+02	2.5225E+00	5.71750E-04	3.88130E-05	8.48902E-01
3.5100E+02	2.4937E+00	5.37800E-04	3.78610E-05	8.49978E-01
3.5300E+02	2.4654E+00	5.55700E-04	3.83650E-05	8.51089E-01
3.5500E+02	2.4376E+00	5.52550E-04	3.82765E-05	8.52194E-01
3.5700E+02	2.4103E+00	5.54950E-04	3.83450E-05	8.53304E-01
3.5900E+02	2.3834E+00	5.54750E-04	3.83385E-05	8.54414E-01
3.6100E+02	2.3570E+00	5.43150E-04	3.80130E-05	8.55500E-01
3.6300E+02	2.3310E+00	5.32950E-04	3.77235E-05	8.56566E-01
3.6500E+02	2.3054E+00	5.26700E-04	3.75440E-05	8.57619E-01
3.6700E+02	2.2803E+00	4.33350E-04	3.47720E-05	8.58486E-01
3.6900E+02	2.2555E+00	5.49550E-04	3.81930E-05	8.59585E-01
3.7100E+02	2.2312E+00	4.38520E-04	3.49310E-05	8.60462E-01
3.7300E+02	2.2072E+00	4.67650E-04	3.58155E-05	8.61397E-01
3.7500E+02	2.1837E+00	5.11500E-04	3.71070E-05	8.62420E-01
3.7700E+02	2.1605E+00	4.09585E-04	3.40300E-05	8.63239E-01
3.7900E+02	2.1377E+00	4.72995E-04	3.59755E-05	8.64185E-01
3.8100E+02	2.1152E+00	4.33960E-04	3.47905E-05	8.65053E-01
3.8300E+02	2.0931E+00	4.01660E-04	3.37785E-05	8.65857E-01
3.8500E+02	2.0713E+00	3.98955E-04	3.36925E-05	8.66655E-01
3.8700E+02	2.0499E+00	3.69310E-04	3.27340E-05	8.67393E-01
3.8900E+02	2.0288E+00	3.99125E-04	3.36980E-05	8.68191E-01
3.9100E+02	2.0080E+00	4.12710E-04	3.41285E-05	8.69017E-01
3.9300E+02	1.9876E+00	3.28220E-04	3.13570E-05	8.69673E-01
3.9500E+02	1.9675E+00	3.15335E-04	3.09120E-05	8.70304E-01
3.9700E+02	1.9476E+00	3.39010E-04	3.17240E-05	8.70982E-01
3.9900E+02	1.9281E+00	2.93780E-04	3.01540E-05	8.71570E-01
4.0100E+02	1.9088E+00	3.54905E-04	3.22580E-05	8.72279E-01
4.0300E+02	1.8899E+00	3.09080E-04	3.06940E-05	8.72898E-01
4.0500E+02	1.8712E+00	2.74070E-04	2.94435E-05	8.73446E-01
4.0700E+02	1.8528E+00	3.19835E-04	3.10680E-05	8.74085E-01
4.0900E+02	1.8347E+00	2.68820E-04	2.92510E-05	8.74623E-01

^{6}Lithium-1.6 m.f.p.

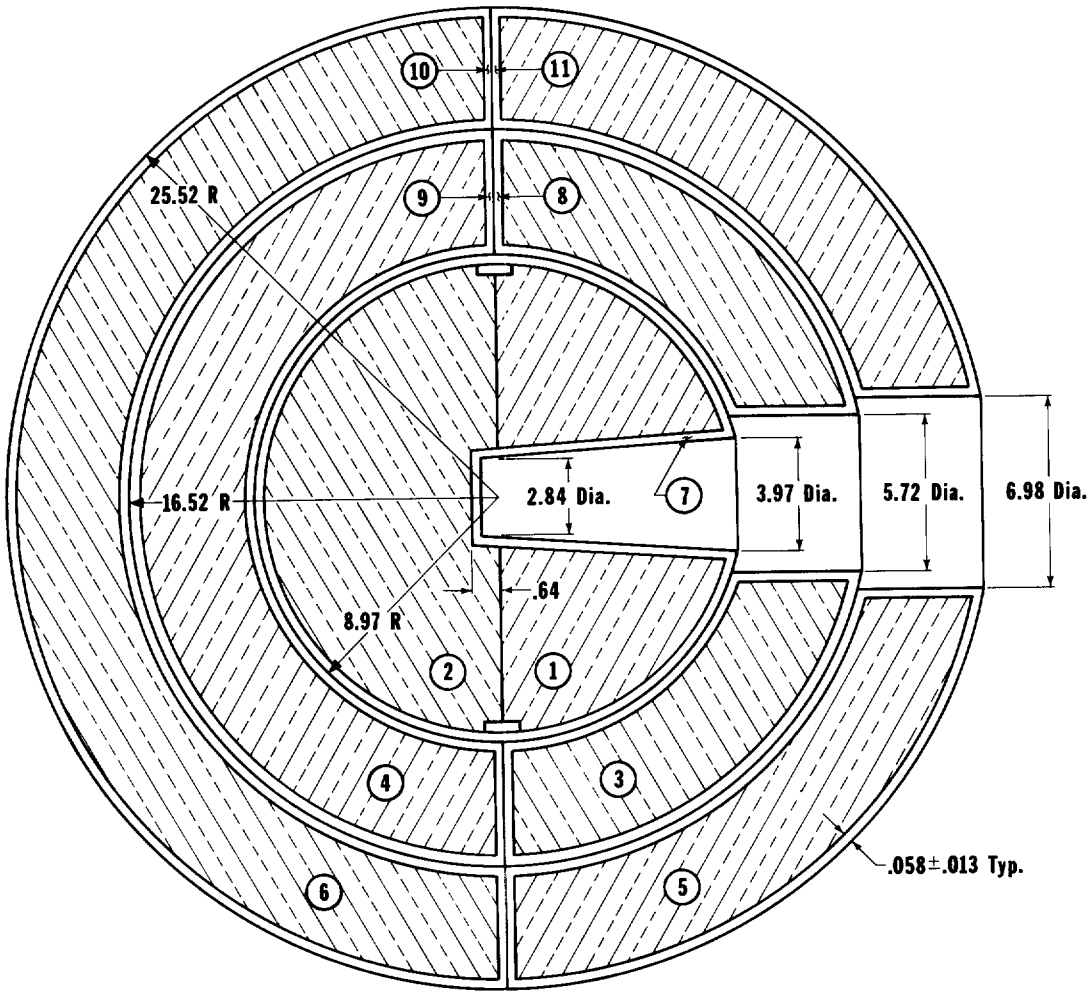

All Dimensions in Centimeters

zone	Mass in grams	Material
1	629	
2	668	^{6}Li – 95.0%
3	3337	
4	3450	^{7}Li – 5.0%
5	11060	
6	11207	
7	578	Fe – 68.6%
8	2930	Cr – 20.0%
9	2871	Ni – 8.4%
10	6340	Si – 2.0%
11	6295	Mn – 1.0%

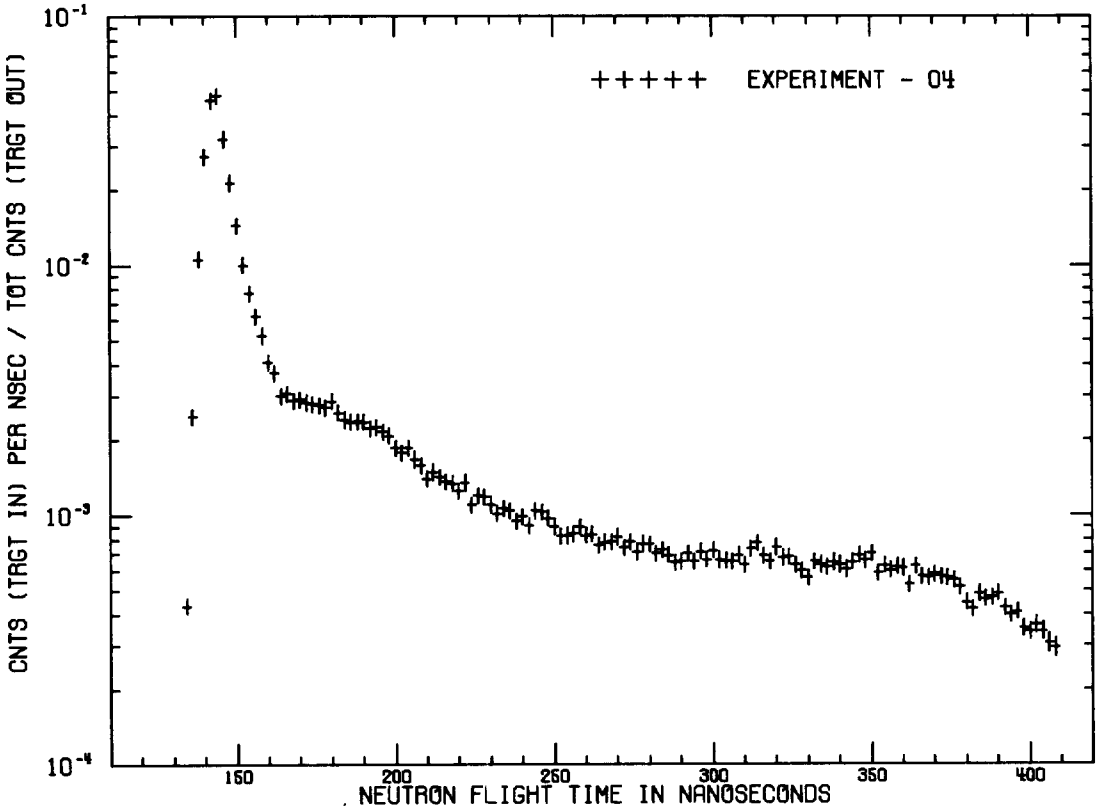

LITHIUM 6 - 1.6 M.F.P. - 30 DEG.

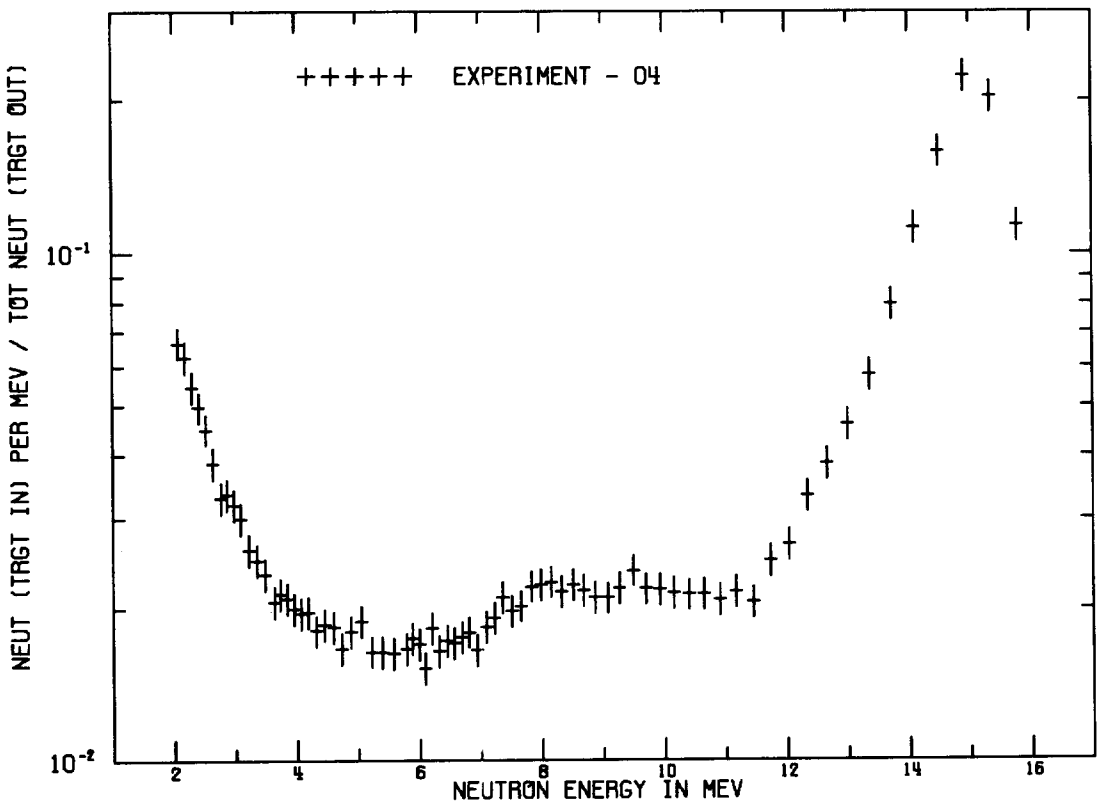

LITHIUM 6 - 1.6 M.F.P. - 30 DEG.

LITHIUM 6 - 1.6 M.F.P. - 30 DEG.
FLIGHTPATH = 765.20 CM DETECTOR = PILOT B FWHM = 4 NS

TIME(NS)	CALCULATED ENERGY(MEV)	CNT/NS/SOURCE	ERROR	INTEGRAL
1.3300E+02	1.7792E+01	4.76720E-05	1.69140E-05	9.53440E-05
1.3500E+02	1.7255E+01	4.31790E-04	2.90175E-05	9.58924E-04
1.3700E+02	1.6741E+01	2.45810E-03	6.14400E-05	5.87512E-03
1.3900E+02	1.6250E+01	1.05410E-02	1.24390E-04	2.69571E-02
1.4100E+02	1.5781E+01	2.72585E-02	1.99170E-04	8.14741E-02
1.4300E+02	1.5332E+01	4.61520E-02	2.58870E-04	1.73778E-01
1.4500E+02	1.4902E+01	4.79525E-02	2.63855E-04	2.69683E-01
1.4700E+02	1.4490E+01	3.21580E-02	2.16240E-04	3.33999E-01
1.4900E+02	1.4095E+01	2.14630E-02	1.76865E-04	3.76925E-01
1.5100E+02	1.3716E+01	1.43760E-02	1.44995E-04	4.05677E-01
1.5300E+02	1.3352E+01	9.99900E-03	1.21200E-04	4.25675E-01
1.5500E+02	1.3002E+01	7.67050E-03	1.06390E-04	4.41016E-01
1.5700E+02	1.2666E+01	6.22550E-03	9.60600E-05	4.53467E-01
1.5900E+02	1.2343E+01	5.21250E-03	8.80950E-05	4.63892E-01
1.6100E+02	1.2033E+01	4.06855E-03	7.81400E-05	4.72029E-01
1.6300E+02	1.1734E+01	3.68515E-03	7.45050E-05	4.79400E-01
1.6500E+02	1.1446E+01	2.98355E-03	6.73450E-05	4.85367E-01
1.6700E+02	1.1169E+01	3.04635E-03	6.80150E-05	4.91459E-01
1.6900E+02	1.0901E+01	2.86575E-03	6.60650E-05	4.97191E-01
1.7100E+02	1.0643E+01	2.87995E-03	6.62200E-05	5.02951E-01
1.7300E+02	1.0395E+01	2.80650E-03	6.54150E-05	5.08564E-01
1.7500E+02	1.0154E+01	2.77165E-03	6.50300E-05	5.14107E-01
1.7700E+02	9.9227E+00	2.74290E-03	6.47050E-05	5.19593E-01
1.7900E+02	9.6987E+00	2.68635E-03	6.40700E-05	5.24966E-01
1.8100E+02	9.4824E+00	2.84530E-03	6.58400E-05	5.30656E-01
1.8300E+02	9.2732E+00	2.55560E-03	6.25750E-05	5.35767E-01
1.8500E+02	9.0708E+00	2.39550E-03	6.06950E-05	5.40558E-01
1.8700E+02	8.8751E+00	2.34775E-03	6.01250E-05	5.45254E-01
1.8900E+02	8.6857E+00	2.35840E-03	6.02550E-05	5.49971E-01
1.9100E+02	8.5023E+00	2.34650E-03	6.01100E-05	5.54664E-01
1.9300E+02	8.3246E+00	2.21495E-03	5.85050E-05	5.59094E-01
1.9500E+02	8.1525E+00	2.23910E-03	5.88050E-05	5.63572E-01
1.9700E+02	7.9857E+00	2.13765E-03	5.75400E-05	5.67847E-01
1.9900E+02	7.8240E+00	2.06430E-03	5.66100E-05	5.71976E-01
2.0100E+02	7.6672E+00	1.84155E-03	5.36900E-05	5.75659E-01
2.0300E+02	7.5150E+00	1.76790E-03	5.26850E-05	5.79195E-01
2.0500E+02	7.3674E+00	1.84305E-03	5.37100E-05	5.82881E-01
2.0700E+02	7.2241E+00	1.66640E-03	5.12750E-05	5.86213E-01
2.0900E+02	7.0849E+00	1.57865E-03	5.00200E-05	5.89371E-01
2.1100E+02	6.9498E+00	1.39285E-03	4.72550E-05	5.92156E-01
2.1300E+02	6.8184E+00	1.48250E-03	4.86080E-05	5.95121E-01
2.1500E+02	6.6908E+00	1.41775E-03	4.76345E-05	5.97957E-01
2.1700E+02	6.5668E+00	1.35725E-03	4.67060E-05	6.00671E-01
2.1900E+02	6.4461E+00	1.33620E-03	4.63790E-05	6.03344E-01
2.2100E+02	6.3288E+00	1.24300E-03	4.49010E-05	6.05830E-01

2.2300E+02	6.2147E+00	1.34590E-03	4.65305E-05	6.08522E-01
2.2500E+02	6.1036E+00	1.09215E-03	4.24005E-05	6.10706E-01
2.2700E+02	5.9955E+00	1.18925E-03	4.40260E-05	6.13084E-01
2.2900E+02	5.8903E+00	1.18430E-03	4.39450E-05	6.15453E-01
2.3100E+02	5.7878E+00	1.10075E-03	4.25470E-05	6.17655E-01
2.3300E+02	5.6879E+00	1.01165E-03	4.10030E-05	6.19678E-01
2.3500E+02	5.5907E+00	1.05860E-03	4.18240E-05	6.21795E-01
2.3700E+02	5.4959E+00	1.03895E-03	4.14820E-05	6.23873E-01
2.3900E+02	5.4035E+00	9.41250E-04	3.97415E-05	6.25755E-01
2.4100E+02	5.3134E+00	9.86300E-04	4.05535E-05	6.27728E-01
2.4300E+02	5.2256E+00	9.02650E-04	3.90325E-05	6.29533E-01
2.4500E+02	5.1399E+00	1.04070E-03	4.15125E-05	6.31615E-01
2.4700E+02	5.0564E+00	1.02765E-03	4.12850E-05	6.33670E-01
2.4900E+02	4.9748E+00	9.70400E-04	4.02685E-05	6.35611E-01
2.5100E+02	4.8952E+00	8.98400E-04	3.89535E-05	6.37408E-01
2.5300E+02	4.8175E+00	8.20850E-04	3.74855E-05	6.39049E-01
2.5500E+02	4.7417E+00	8.24700E-04	3.75590E-05	6.40699E-01
2.5700E+02	4.6676E+00	8.37800E-04	3.78110E-05	6.42374E-01
2.5900E+02	4.5953E+00	8.96000E-04	3.89085E-05	6.44166E-01
2.6100E+02	4.5246E+00	8.26750E-04	3.75985E-05	6.45820E-01
2.6300E+02	4.4556E+00	8.36150E-04	3.77795E-05	6.47492E-01
2.6500E+02	4.3881E+00	7.56250E-04	3.62160E-05	6.49005E-01
2.6700E+02	4.3222E+00	7.75550E-04	3.66000E-05	6.50556E-01
2.6900E+02	4.2577E+00	7.81050E-04	3.67085E-05	6.52118E-01
2.7100E+02	4.1947E+00	8.16650E-04	3.74040E-05	6.53751E-01
2.7300E+02	4.1330E+00	7.36650E-04	3.58225E-05	6.55224E-01
2.7500E+02	4.0728E+00	7.80800E-04	3.67040E-05	6.56786E-01
2.7700E+02	4.0138E+00	7.10850E-04	3.52980E-05	6.58208E-01
2.7900E+02	3.9561E+00	7.66250E-04	3.64160E-05	6.59740E-01
2.8100E+02	3.8996E+00	7.61650E-04	3.63240E-05	6.61264E-01
2.8300E+02	3.8443E+00	7.01050E-04	3.50960E-05	6.62666E-01
2.8500E+02	3.7903E+00	7.24750E-04	3.55815E-05	6.64115E-01
2.8700E+02	3.7373E+00	6.89400E-04	3.48555E-05	6.65494E-01
2.8900E+02	3.6854E+00	6.45050E-04	3.39215E-05	6.66784E-01
2.9100E+02	3.6347E+00	6.52050E-04	3.40710E-05	6.68088E-01
2.9300E+02	3.5849E+00	6.98600E-04	3.50460E-05	6.69485E-01
2.9500E+02	3.5362E+00	6.51050E-04	3.40495E-05	6.70787E-01
2.9700E+02	3.4885E+00	7.12900E-04	3.53390E-05	6.72213E-01
2.9900E+02	3.4417E+00	6.61200E-04	3.42645E-05	6.73536E-01
3.0100E+02	3.3959E+00	7.20400E-04	3.54925E-05	6.74976E-01
3.0300E+02	3.3510E+00	6.59550E-04	3.42300E-05	6.76296E-01
3.0500E+02	3.3069E+00	6.54450E-04	3.41220E-05	6.77604E-01
3.0700E+02	3.2638E+00	6.49200E-04	3.40100E-05	6.78903E-01
3.0900E+02	3.2214E+00	6.89500E-04	3.48575E-05	6.80282E-01
3.1100E+02	3.1799E+00	6.31850E-04	3.36385E-05	6.81546E-01
3.1300E+02	3.1392E+00	7.33400E-04	3.57565E-05	6.83012E-01
3.1500E+02	3.0993E+00	7.71450E-04	3.65190E-05	6.84555E-01
3.1700E+02	3.0601E+00	6.84800E-04	3.47595E-05	6.85925E-01

3.1900E+02	3.0217E+00	6.51850E-04	3.40660E-05	6.87229E-01
3.2100E+02	2.9840E+00	7.41600E-04	3.59225E-05	6.88712E-01
3.2300E+02	2.9469E+00	6.74300E-04	3.45400E-05	6.90060E-01
3.2500E+02	2.9106E+00	6.78750E-04	3.46330E-05	6.91418E-01
3.2700E+02	2.8750E+00	6.28600E-04	3.35685E-05	6.92675E-01
3.2900E+02	2.8399E+00	5.97050E-04	3.28820E-05	6.93869E-01
3.3100E+02	2.8056E+00	5.59450E-04	3.20440E-05	6.94988E-01
3.3300E+02	2.7718E+00	6.49350E-04	3.40130E-05	6.96287E-01
3.3500E+02	2.7387E+00	6.32050E-04	3.36435E-05	6.97551E-01
3.3700E+02	2.7061E+00	6.16150E-04	3.32990E-05	6.98783E-01
3.3900E+02	2.6742E+00	6.45700E-04	3.39350E-05	7.00075E-01
3.4100E+02	2.6428E+00	6.33000E-04	3.36640E-05	7.01341E-01
3.4300E+02	2.6119E+00	6.05600E-04	3.30695E-05	7.02552E-01
3.4500E+02	2.5816E+00	6.47950E-04	3.39835E-05	7.03848E-01
3.4700E+02	2.5518E+00	6.89800E-04	3.48635E-05	7.05227E-01
3.4900E+02	2.5225E+00	6.58550E-04	3.42090E-05	7.06544E-01
3.5100E+02	2.4937E+00	7.02450E-04	3.51255E-05	7.07949E-01
3.5300E+02	2.4654E+00	5.84300E-04	3.26005E-05	7.09118E-01
3.5500E+02	2.4376E+00	6.27600E-04	3.35470E-05	7.10373E-01
3.5700E+02	2.4103E+00	6.00350E-04	3.29540E-05	7.11574E-01
3.5900E+02	2.3834E+00	6.20050E-04	3.33840E-05	7.12814E-01
3.6100E+02	2.3570E+00	6.12150E-04	3.32130E-05	7.14038E-01
3.6300E+02	2.3310E+00	5.27250E-04	3.13085E-05	7.15093E-01
3.6500E+02	2.3054E+00	6.24200E-04	3.34740E-05	7.16341E-01
3.6700E+02	2.2803E+00	5.66100E-04	3.21940E-05	7.17473E-01
3.6900E+02	2.2555E+00	5.60300E-04	3.20625E-05	7.18594E-01
3.7100E+02	2.2312E+00	5.76650E-04	3.24295E-05	7.19747E-01
3.7300E+02	2.2072E+00	5.64350E-04	3.21540E-05	7.20876E-01
3.7500E+02	2.1837E+00	5.61300E-04	3.20850E-05	7.21998E-01
3.7700E+02	2.1605E+00	5.46750E-04	3.17560E-05	7.23092E-01
3.7900E+02	2.1377E+00	5.16150E-04	3.10500E-05	7.24124E-01
3.8100E+02	2.1152E+00	4.45750E-04	2.93640E-05	7.25016E-01
3.8300E+02	2.0931E+00	4.19005E-04	2.86970E-05	7.25854E-01
3.8500E+02	2.0713E+00	4.84770E-04	3.03100E-05	7.26823E-01
3.8700E+02	2.0499E+00	4.60565E-04	2.97265E-05	7.27744E-01
3.8900E+02	2.0288E+00	4.68235E-04	2.99130E-05	7.28681E-01
3.9100E+02	2.0080E+00	4.85965E-04	3.03385E-05	7.29653E-01
3.9300E+02	1.9876E+00	4.24900E-04	2.88455E-05	7.30503E-01
3.9500E+02	1.9675E+00	3.98705E-04	2.81805E-05	7.31300E-01
3.9700E+02	1.9476E+00	4.09425E-04	2.84545E-05	7.32119E-01
3.9900E+02	1.9281E+00	3.53025E-04	2.69820E-05	7.32825E-01
4.0100E+02	1.9088E+00	3.41345E-04	2.66670E-05	7.33508E-01
4.0300E+02	1.8899E+00	3.63435E-04	2.72600E-05	7.34234E-01
4.0500E+02	1.8712E+00	3.41900E-04	2.66820E-05	7.34918E-01
4.0700E+02	1.8528E+00	3.06760E-04	2.57110E-05	7.35532E-01
4.0900E+02	1.8347E+00	2.94395E-04	2.53610E-05	7.36121E-01

^{7}Lithium-0.5 m.f.p.

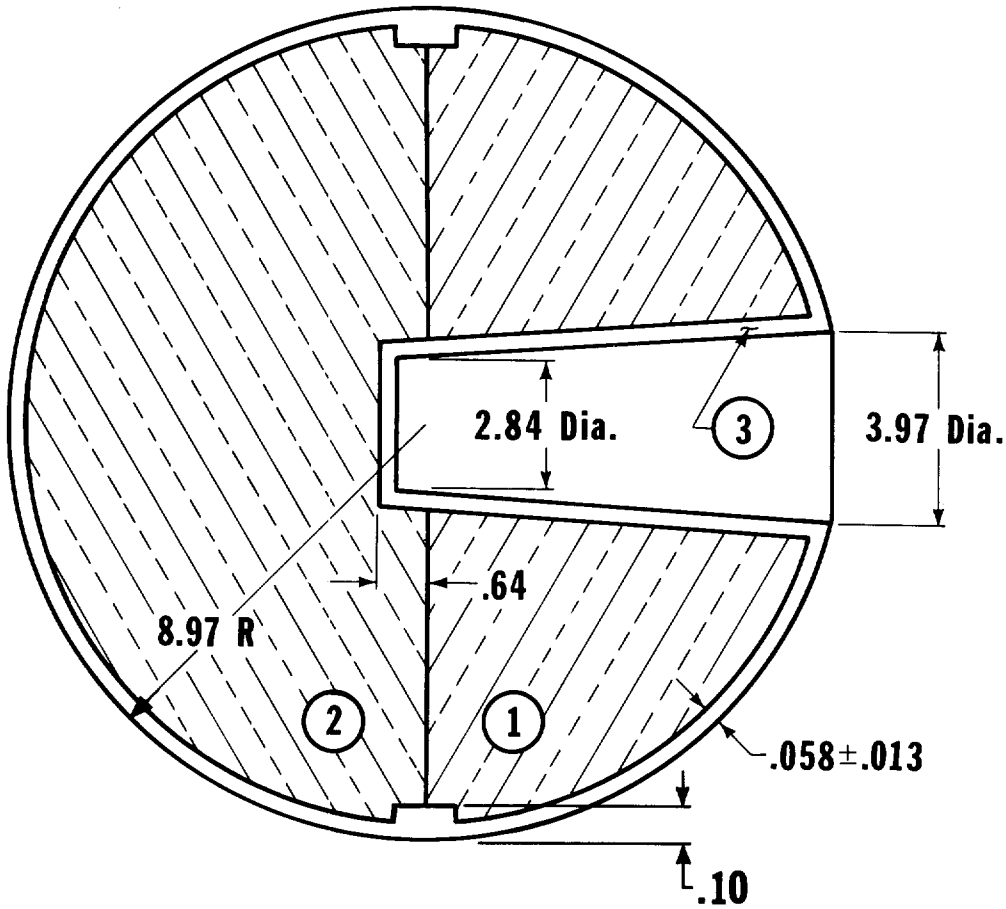

All Dimensions in Centimeters

Zone	Mass in grams	Material
1	720	^{7}Li – 97.39%
2	761	^{6}Li – 2.61%
3	609	Fe – 68.6% Cr – 20.0% Ni – 8.4% Si – 2.0% Mn – 1.0%

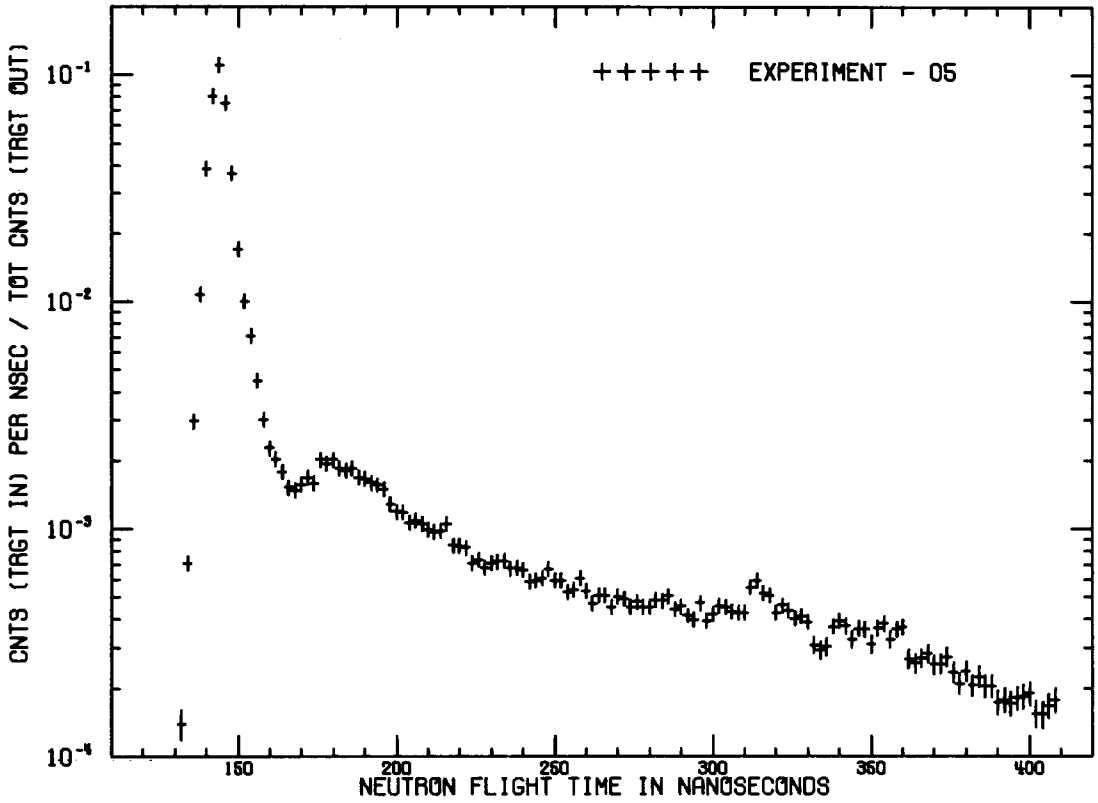

LITHIUM 7 - 0.5 M.F.P. - 30 DEG.

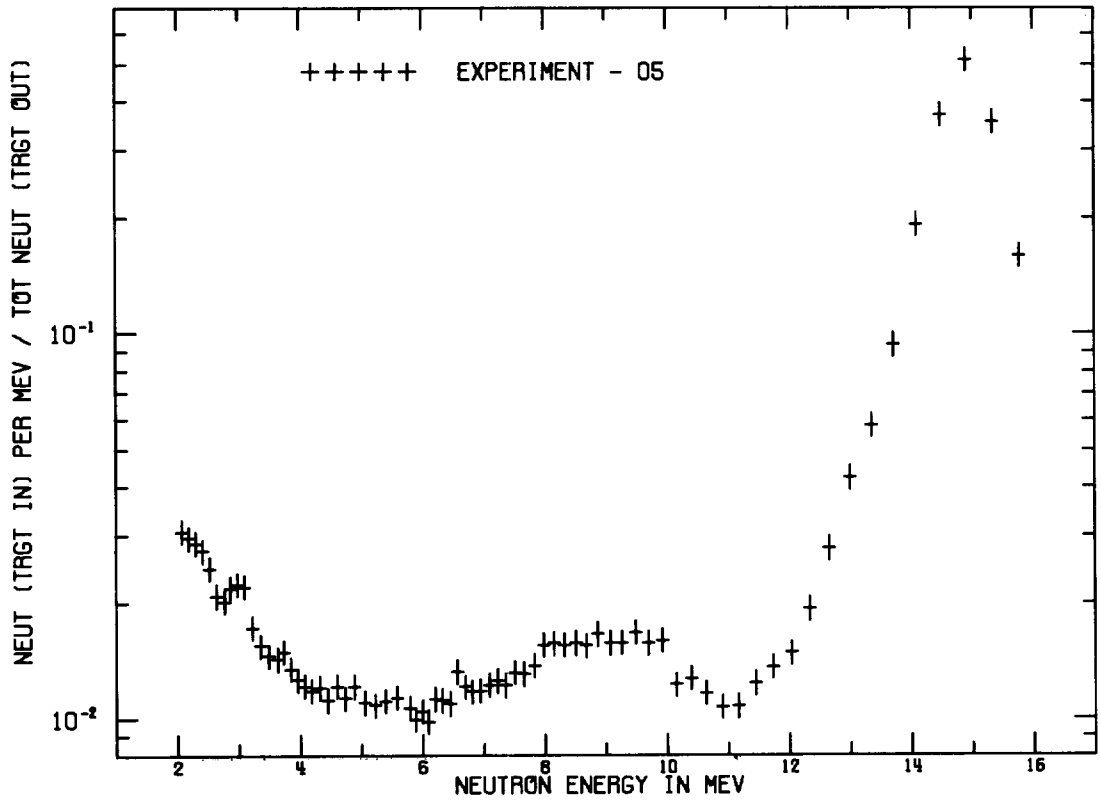

LITHIUM 7 - 0.5 M.F.P. - 30 DEG.

LITHIUM 7 - 0.5 M.F.P. - 30 DEG.
FLIGHTPATH = 765.20 CM DETECTOR = PILOT B FWHM = 4 NS

TIME(NS)	CALCULATED ENERGY(MEV)	CNT/NS/SOURCE	ERROR	INTEGRAL
1.3100E+02	1.8356E+01	3.70215E-05	1.62585E-05	7.40430E-05
1.3300E+02	1.7792E+01	1.38660E-04	2.02455E-05	3.51363E-04
1.3500E+02	1.7255E+01	7.07650E-04	3.49945E-05	1.76666E-03
1.3700E+02	1.6741E+01	2.95665E-03	6.66700E-05	7.67996E-03
1.3900E+02	1.6250E+01	1.07915E-02	1.25155E-04	2.92630E-02
1.4100E+02	1.5781E+01	3.83910E-02	2.34915E-04	1.06045E-01
1.4300E+02	1.5332E+01	8.05000E-02	3.39835E-04	2.67045E-01
1.4500E+02	1.4902E+01	1.10425E-01	3.97915E-04	4.87895E-01
1.4700E+02	1.4490E+01	7.47800E-02	3.27550E-04	6.37455E-01
1.4900E+02	1.4095E+01	3.67090E-02	2.29730E-04	7.10873E-01
1.5100E+02	1.3716E+01	1.69385E-02	1.56420E-04	7.44750E-01
1.5300E+02	1.3352E+01	1.00315E-02	1.20730E-04	7.64813E-01
1.5500E+02	1.3002E+01	7.06050E-03	1.01535E-04	7.78934E-01
1.5700E+02	1.2666E+01	4.48800E-03	8.14750E-05	7.87910E-01
1.5900E+02	1.2343E+01	3.01830E-03	6.73300E-05	7.93947E-01
1.6100E+02	1.2033E+01	2.25820E-03	5.86950E-05	7.98463E-01
1.6300E+02	1.1734E+01	2.01815E-03	5.56900E-05	8.02499E-01
1.6500E+02	1.1446E+01	1.78560E-03	5.26150E-05	8.06070E-01
1.6700E+02	1.1169E+01	1.51830E-03	4.88415E-05	8.09107E-01
1.6900E+02	1.0901E+01	1.47465E-03	4.81975E-05	8.12056E-01
1.7100E+02	1.0643E+01	1.56900E-03	4.95795E-05	8.15194E-01
1.7300E+02	1.0395E+01	1.67270E-03	5.10550E-05	8.18540E-01
1.7500E+02	1.0154E+01	1.57710E-03	4.96960E-05	8.21694E-01
1.7700E+02	9.9227E+00	2.00865E-03	5.55650E-05	8.25711E-01
1.7900E+02	9.6987E+00	1.92765E-03	5.45150E-05	8.29567E-01
1.8100E+02	9.4824E+00	2.00775E-03	5.55550E-05	8.33582E-01
1.8300E+02	9.2732E+00	1.83650E-03	5.33050E-05	8.37255E-01
1.8500E+02	9.0708E+00	1.79200E-03	5.27000E-05	8.40839E-01
1.8700E+02	8.8751E+00	1.84960E-03	5.34800E-05	8.44538E-01
1.8900E+02	8.6857E+00	1.67810E-03	5.11300E-05	8.47894E-01
1.9100E+02	8.5023E+00	1.65805E-03	5.08500E-05	8.51211E-01
1.9300E+02	8.3246E+00	1.59025E-03	4.98850E-05	8.54391E-01
1.9500E+02	8.1525E+00	1.55590E-03	4.93895E-05	8.57503E-01
1.9700E+02	7.9857E+00	1.49265E-03	4.84640E-05	8.60488E-01
1.9900E+02	7.8240E+00	1.28400E-03	4.52765E-05	8.63056E-01
2.0100E+02	7.6672E+00	1.18765E-03	4.37265E-05	8.65431E-01
2.0300E+02	7.5150E+00	1.17800E-03	4.35680E-05	8.67787E-01
2.0500E+02	7.3674E+00	1.06715E-03	4.17065E-05	8.69922E-01
2.0700E+02	7.2241E+00	1.09060E-03	4.21070E-05	8.72103E-01
2.0900E+02	7.0849E+00	1.04690E-03	4.13570E-05	8.74197E-01
2.1100E+02	6.9498E+00	9.92900E-04	4.04120E-05	8.76183E-01
2.1300E+02	6.8184E+00	9.70950E-04	4.00210E-05	8.78124E-01
2.1500E+02	6.6908E+00	9.78300E-04	4.01525E-05	8.80081E-01
2.1700E+02	6.5668E+00	1.04990E-03	4.14090E-05	8.82181E-01
2.1900E+02	6.4461E+00	8.45300E-04	3.77065E-05	8.83871E-01

2.2100E+02	6.3288E+00	8.41700E-04	3.76380E-05	8.85555E-01
2.2300E+02	6.2147E+00	8.26750E-04	3.73525E-05	8.87208E-01
2.2500E+02	6.1036E+00	7.03850E-04	3.49175E-05	8.88616E-01
2.2700E+02	5.9955E+00	7.28900E-04	3.54270E-05	8.90074E-01
2.2900E+02	5.8903E+00	6.75000E-04	3.43210E-05	8.91424E-01
2.3100E+02	5.7878E+00	7.04300E-04	3.49265E-05	8.92832E-01
2.3300E+02	5.6879E+00	7.18950E-04	3.52255E-05	8.94270E-01
2.3500E+02	5.5907E+00	7.21200E-04	3.52710E-05	8.95713E-01
2.3700E+02	5.4959E+00	6.69750E-04	3.42115E-05	8.97052E-01
2.3900E+02	5.4035E+00	6.73800E-04	3.42955E-05	8.98400E-01
2.4100E+02	5.3134E+00	6.59150E-04	3.39880E-05	8.99718E-01
2.4300E+02	5.2256E+00	5.85800E-04	3.24065E-05	9.00890E-01
2.4500E+02	5.1399E+00	5.94500E-04	3.25985E-05	9.02079E-01
2.4700E+02	5.0564E+00	6.07100E-04	3.28740E-05	9.03293E-01
2.4900E+02	4.9748E+00	6.68500E-04	3.41850E-05	9.04630E-01
2.5100E+02	4.8952E+00	5.91050E-04	3.25220E-05	9.05812E-01
2.5300E+02	4.8175E+00	5.89700E-04	3.24930E-05	9.06991E-01
2.5500E+02	4.7417E+00	5.26850E-04	3.10765E-05	9.08045E-01
2.5700E+02	4.6676E+00	5.38350E-04	3.13400E-05	9.09122E-01
2.5900E+02	4.5953E+00	6.07400E-04	3.28795E-05	9.10337E-01
2.6100E+02	4.5246E+00	5.30800E-04	3.11680E-05	9.11398E-01
2.6300E+02	4.4556E+00	4.66635E-04	2.96570E-05	9.12332E-01
2.6500E+02	4.3881E+00	5.10750E-04	3.07040E-05	9.13353E-01
2.6700E+02	4.3222E+00	5.08600E-04	3.06535E-05	9.14370E-01
2.6900E+02	4.2577E+00	4.54090E-04	2.93525E-05	9.15278E-01
2.7100E+02	4.1947E+00	5.04400E-04	3.05550E-05	9.16287E-01
2.7300E+02	4.1330E+00	4.90355E-04	3.02240E-05	9.17268E-01
2.7500E+02	4.0728E+00	4.51255E-04	2.92830E-05	9.18170E-01
2.7700E+02	4.0138E+00	4.77005E-04	2.99060E-05	9.19124E-01
2.7900E+02	3.9561E+00	4.52830E-04	2.93215E-05	9.20030E-01
2.8100E+02	3.8996E+00	4.53305E-04	2.93335E-05	9.20937E-01
2.8300E+02	3.8443E+00	4.86645E-04	3.01360E-05	9.21910E-01
2.8500E+02	3.7903E+00	4.83075E-04	3.00510E-05	9.22876E-01
2.8700E+02	3.7373E+00	5.06100E-04	3.05945E-05	9.23888E-01
2.8900E+02	3.6854E+00	4.42645E-04	2.90720E-05	9.24774E-01
2.9100E+02	3.6347E+00	4.55605E-04	2.93895E-05	9.25685E-01
2.9300E+02	3.5849E+00	4.15060E-04	2.83845E-05	9.26515E-01
2.9500E+02	3.5362E+00	3.96960E-04	2.79240E-05	9.27309E-01
2.9700E+02	3.4885E+00	4.71220E-04	2.97675E-05	9.28251E-01
2.9900E+02	3.4417E+00	3.91895E-04	2.77940E-05	9.29035E-01
3.0100E+02	3.3959E+00	4.20445E-04	2.85200E-05	9.29876E-01
3.0300E+02	3.3510E+00	4.56355E-04	2.94075E-05	9.30789E-01
3.0500E+02	3.3069E+00	4.53250E-04	2.93320E-05	9.31695E-01
3.0700E+02	3.2638E+00	4.33580E-04	2.88480E-05	9.32562E-01
3.0900E+02	3.2214E+00	4.28275E-04	2.87160E-05	9.33419E-01
3.1100E+02	3.1799E+00	4.25020E-04	2.86345E-05	9.34269E-01
3.1300E+02	3.1392E+00	5.51300E-04	3.16355E-05	9.35372E-01
3.1500E+02	3.0993E+00	5.94450E-04	3.25965E-05	9.36560E-01

3.1700E+02	3.0601E+00	5.21400E-04	3.09505E-05	9.37603E-01
3.1900E+02	3.0217E+00	5.06600E-04	3.06070E-05	9.38616E-01
3.2100E+02	2.9840E+00	4.25485E-04	2.86465E-05	9.39467E-01
3.2300E+02	2.9469E+00	4.60810E-04	2.95160E-05	9.40389E-01
3.2500E+02	2.9106E+00	4.36220E-04	2.89135E-05	9.41262E-01
3.2700E+02	2.8750E+00	4.04065E-04	2.81060E-05	9.42070E-01
3.2900E+02	2.8399E+00	4.11165E-04	2.82860E-05	9.42892E-01
3.3100E+02	2.8056E+00	3.88210E-04	2.76990E-05	9.43668E-01
3.3300E+02	2.7718E+00	3.08085E-04	2.55440E-05	9.44285E-01
3.3500E+02	2.7387E+00	2.93375E-04	2.51285E-05	9.44871E-01
3.3700E+02	2.7061E+00	3.02720E-04	2.53930E-05	9.45477E-01
3.3900E+02	2.6742E+00	3.71640E-04	2.72675E-05	9.46220E-01
3.4100E+02	2.6428E+00	3.94560E-04	2.78625E-05	9.47009E-01
3.4300E+02	2.6119E+00	3.73770E-04	2.73230E-05	9.47757E-01
3.4500E+02	2.5816E+00	3.27655E-04	2.60870E-05	9.48412E-01
3.4700E+02	2.5518E+00	3.63945E-04	2.70645E-05	9.49140E-01
3.4900E+02	2.5225E+00	3.60510E-04	2.69735E-05	9.49861E-01
3.5100E+02	2.4937E+00	3.09985E-04	2.55970E-05	9.50481E-01
3.5300E+02	2.4654E+00	3.65565E-04	2.71075E-05	9.51212E-01
3.5500E+02	2.4376E+00	3.82205E-04	2.75435E-05	9.51976E-01
3.5700E+02	2.4103E+00	3.27040E-04	2.60700E-05	9.52630E-01
3.5900E+02	2.3834E+00	3.60270E-04	2.69670E-05	9.53351E-01
3.6100E+02	2.3570E+00	3.69535E-04	2.72120E-05	9.54090E-01
3.6300E+02	2.3310E+00	2.68015E-04	2.43950E-05	9.54626E-01
3.6500E+02	2.3054E+00	2.56445E-04	2.40530E-05	9.55139E-01
3.6700E+02	2.2803E+00	2.69760E-04	2.44460E-05	9.55679E-01
3.6900E+02	2.2555E+00	2.83740E-04	2.48520E-05	9.56246E-01
3.7100E+02	2.2312E+00	2.53440E-04	2.39635E-05	9.56753E-01
3.7300E+02	2.2072E+00	2.54945E-04	2.40085E-05	9.57263E-01
3.7500E+02	2.1837E+00	2.74495E-04	2.45845E-05	9.57812E-01
3.7700E+02	2.1605E+00	2.34145E-04	2.33800E-05	9.58280E-01
3.7900E+02	2.1377E+00	2.10065E-04	2.26305E-05	9.58700E-01
3.8100E+02	2.1152E+00	2.37530E-04	2.34835E-05	9.59175E-01
3.8300E+02	2.0931E+00	2.05355E-04	2.24810E-05	9.59586E-01
3.8500E+02	2.0713E+00	2.24475E-04	2.30820E-05	9.60035E-01
3.8700E+02	2.0499E+00	2.04260E-04	2.24460E-05	9.60443E-01
3.8900E+02	2.0288E+00	2.03320E-04	2.24160E-05	9.60850E-01
3.9100E+02	2.0080E+00	1.73660E-04	2.14480E-05	9.61197E-01
3.9300E+02	1.9876E+00	1.77490E-04	2.15755E-05	9.61552E-01
3.9500E+02	1.9675E+00	1.71775E-04	2.13845E-05	9.61896E-01
3.9700E+02	1.9476E+00	1.80710E-04	2.16820E-05	9.62257E-01
3.9900E+02	1.9281E+00	1.84070E-04	2.17925E-05	9.62625E-01
4.0100E+02	1.9088E+00	1.90090E-04	2.19895E-05	9.63006E-01
4.0300E+02	1.8899E+00	1.54325E-04	2.07925E-05	9.63314E-01
4.0500E+02	1.8712E+00	1.53440E-04	2.07620E-05	9.63621E-01
4.0700E+02	1.8528E+00	1.67750E-04	2.12495E-05	9.63957E-01
4.0900E+02	1.8347E+00	1.77660E-04	2.15810E-05	9.64312E-01

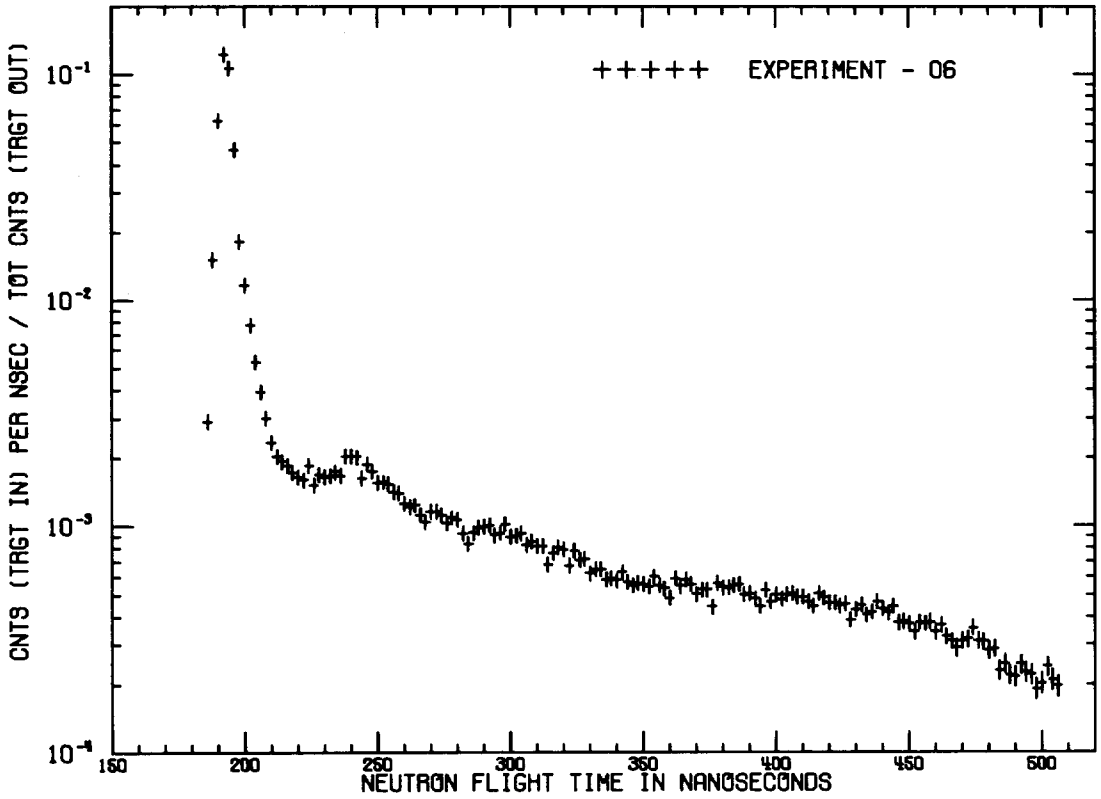

LITHIUM 7 - 0.5 M.F.P. - 120 DEG.

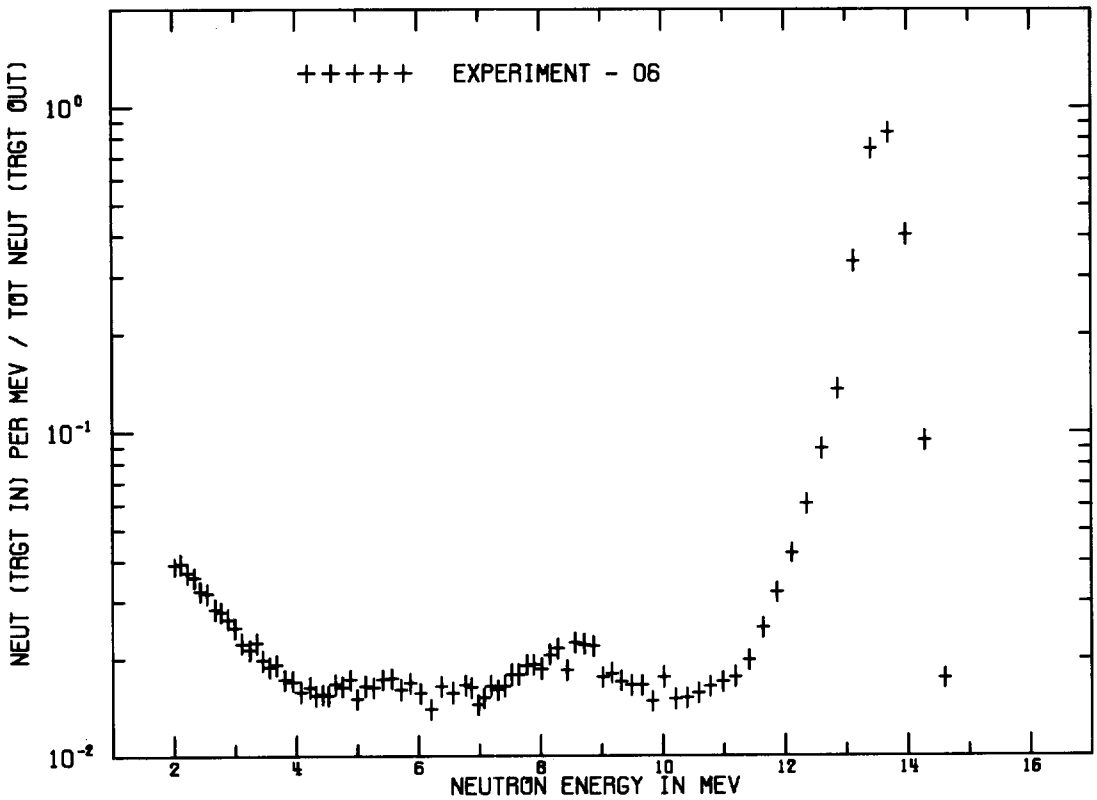

LITHIUM 7 - 0.5 M.F.P. - 120 DEG.

LITHIUM 7 - 0.5 M.F.P. - 120 DEG.
FLIGHTPATH = 977.20 CM DETECTOR = NE213 FWHM = 4 NS

TIME(NS)	CALCULATED ENERGY(MEV)	CNT/NS/SOURCE	ERROR	INTEGRAL
1.8500E+02	1.4930E+01	3.71360E-04	2.73580E-05	7.42720E-04
1.8700E+02	1.4605E+01	2.88305E-03	7.36300E-05	6.50882E-03
1.8900E+02	1.4291E+01	1.50105E-02	1.67280E-04	3.65298E-02
1.9100E+02	1.3986E+01	6.20900E-02	3.39960E-04	1.60710E-01
1.9300E+02	1.3692E+01	1.22955E-01	4.78330E-04	4.06620E-01
1.9500E+02	1.3406E+01	1.06455E-01	4.45090E-04	6.19530E-01
1.9700E+02	1.3130E+01	4.63810E-02	2.93845E-04	7.12292E-01
1.9900E+02	1.2862E+01	1.82345E-02	1.84340E-04	7.48761E-01
2.0100E+02	1.2602E+01	1.16455E-02	1.47385E-04	7.72052E-01
2.0300E+02	1.2350E+01	7.71650E-03	1.20055E-04	7.87485E-01
2.0500E+02	1.2105E+01	5.32000E-03	9.97700E-05	7.98125E-01
2.0700E+02	1.1868E+01	3.92585E-03	8.57950E-05	8.05977E-01
2.0900E+02	1.1638E+01	2.99670E-03	7.50500E-05	8.11970E-01
2.1100E+02	1.1414E+01	2.33490E-03	6.63450E-05	8.16640E-01
2.1300E+02	1.1197E+01	2.03700E-03	6.20250E-05	8.20714E-01
2.1500E+02	1.0986E+01	1.92860E-03	6.03800E-05	8.24571E-01
2.1700E+02	1.0781E+01	1.84460E-03	5.90700E-05	8.28260E-01
2.1900E+02	1.0582E+01	1.72395E-03	5.71400E-05	8.31708E-01
2.2100E+02	1.0388E+01	1.64315E-03	5.58100E-05	8.34994E-01
2.2300E+02	1.0199E+01	1.59965E-03	5.50800E-05	8.38194E-01
2.2500E+02	1.0016E+01	1.84415E-03	5.90650E-05	8.41882E-01
2.2700E+02	9.8374E+00	1.51855E-03	5.36900E-05	8.44919E-01
2.2900E+02	9.6637E+00	1.68005E-03	5.64200E-05	8.48279E-01
2.3100E+02	9.4946E+00	1.64450E-03	5.58300E-05	8.51568E-01
2.3300E+02	9.3298E+00	1.66610E-03	5.61900E-05	8.54900E-01
2.3500E+02	9.1694E+00	1.73435E-03	5.73050E-05	8.58369E-01
2.3700E+02	9.0131E+00	1.66105E-03	5.61050E-05	8.61691E-01
2.3900E+02	8.8607E+00	2.03400E-03	6.19800E-05	8.65759E-01
2.4100E+02	8.7122E+00	2.02985E-03	6.19200E-05	8.69819E-01
2.4300E+02	8.5674E+00	2.02010E-03	6.17700E-05	8.73859E-01
2.4500E+02	8.4262E+00	1.63320E-03	5.56400E-05	8.77125E-01
2.4700E+02	8.2885E+00	1.87260E-03	5.95100E-05	8.80871E-01
2.4900E+02	8.1542E+00	1.74645E-03	5.75050E-05	8.84364E-01
2.5100E+02	8.0231E+00	1.54925E-03	5.42200E-05	8.87462E-01
2.5300E+02	7.8952E+00	1.56290E-03	5.44550E-05	8.90588E-01
2.5500E+02	7.7703E+00	1.52920E-03	5.38750E-05	8.93646E-01
2.5700E+02	7.6483E+00	1.40990E-03	5.17750E-05	8.96466E-01
2.5900E+02	7.5292E+00	1.39085E-03	5.14300E-05	8.99248E-01
2.6100E+02	7.4129E+00	1.25845E-03	4.89780E-05	9.01765E-01
2.6300E+02	7.2993E+00	1.21080E-03	4.80640E-05	9.04186E-01
2.6500E+02	7.1883E+00	1.23675E-03	4.85635E-05	9.06660E-01
2.6700E+02	7.0798E+00	1.11550E-03	4.61825E-05	9.08891E-01
2.6900E+02	6.9737E+00	1.04445E-03	4.47285E-05	9.10980E-01
2.7100E+02	6.8700E+00	1.15995E-03	4.70695E-05	9.13300E-01
2.7300E+02	6.7687E+00	1.16040E-03	4.70785E-05	9.15620E-01

2.7500E+02	6.6695E+00	1.11850E-03	4.62435E-05	9.17857E-01
2.7700E+02	6.5725E+00	1.02535E-03	4.43295E-05	9.19908E-01
2.7900E+02	6.4777E+00	1.08700E-03	4.56050E-05	9.22082E-01
2.8100E+02	6.3849E+00	1.06765E-03	4.52090E-05	9.24217E-01
2.8300E+02	6.2940E+00	9.28900E-04	4.22580E-05	9.26075E-01
2.8500E+02	6.2051E+00	8.32450E-04	4.00785E-05	9.27740E-01
2.8700E+02	6.1181E+00	9.32050E-04	4.23265E-05	9.29604E-01
2.8900E+02	6.0329E+00	9.84300E-04	4.34705E-05	9.31574E-01
2.9100E+02	5.9495E+00	9.93850E-04	4.36645E-05	9.33561E-01
2.9300E+02	5.8678E+00	1.00305E-03	4.38600E-05	9.35568E-01
2.9500E+02	5.7877E+00	9.10100E-04	4.18420E-05	9.37388E-01
2.9700E+02	5.7093E+00	9.29150E-04	4.22635E-05	9.39246E-01
2.9900E+02	5.6325E+00	1.02095E-03	4.42375E-05	9.41238E-01
3.0100E+02	5.5573E+00	8.97200E-04	4.15545E-05	9.43082E-01
3.0300E+02	5.4835E+00	9.03050E-04	4.16850E-05	9.44888E-01
3.0500E+02	5.4112E+00	9.23900E-04	4.21475E-05	9.46736E-01
3.0700E+02	5.3403E+00	8.22500E-04	3.98470E-05	9.48381E-01
3.0900E+02	5.2708E+00	8.55300E-04	4.06050E-05	9.50092E-01
3.1100E+02	5.2027E+00	8.17350E-04	3.97265E-05	9.51727E-01
3.1300E+02	5.1359E+00	8.16250E-04	3.97010E-05	9.53359E-01
3.1500E+02	5.0703E+00	6.74100E-04	3.62175E-05	9.54707E-01
3.1700E+02	5.0061E+00	7.58750E-04	3.83295E-05	9.56225E-01
3.1900E+02	4.9430E+00	8.06800E-04	3.94785E-05	9.57838E-01
3.2100E+02	4.8811E+00	7.84100E-04	3.89400E-05	9.59407E-01
3.2300E+02	4.8204E+00	6.70900E-04	3.61350E-05	9.60748E-01
3.2500E+02	4.7608E+00	7.79750E-04	3.88360E-05	9.62308E-01
3.2700E+02	4.7023E+00	7.08600E-04	3.70925E-05	9.63725E-01
3.2900E+02	4.6449E+00	7.19200E-04	3.73575E-05	9.65163E-01
3.3100E+02	4.5885E+00	6.19100E-04	3.47755E-05	9.66402E-01
3.3300E+02	4.5331E+00	6.44850E-04	3.54585E-05	9.67691E-01
3.3500E+02	4.4788E+00	6.43900E-04	3.54330E-05	9.68979E-01
3.3700E+02	4.4254E+00	5.79450E-04	3.36985E-05	9.70138E-01
3.3900E+02	4.3730E+00	5.86300E-04	3.38870E-05	9.71311E-01
3.4100E+02	4.3215E+00	5.76700E-04	3.36230E-05	9.72464E-01
3.4300E+02	4.2709E+00	6.26650E-04	3.49770E-05	9.73717E-01
3.4500E+02	4.2212E+00	5.67300E-04	3.33610E-05	9.74852E-01
3.4700E+02	4.1723E+00	5.46100E-04	3.27650E-05	9.75944E-01
3.4900E+02	4.1243E+00	5.58400E-04	3.31120E-05	9.77061E-01
3.5100E+02	4.0772E+00	5.53250E-04	3.29675E-05	9.78167E-01
3.5300E+02	4.0308E+00	5.39500E-04	3.25775E-05	9.79246E-01
3.5500E+02	3.9852E+00	5.98000E-04	3.42070E-05	9.80442E-01
3.5700E+02	3.9404E+00	5.45900E-04	3.27595E-05	9.81534E-01
3.5900E+02	3.8964E+00	5.31150E-04	3.23375E-05	9.82597E-01
3.6100E+02	3.8530E+00	4.81320E-04	3.08710E-05	9.83559E-01
3.6300E+02	3.8104E+00	5.84900E-04	3.38485E-05	9.84729E-01
3.6500E+02	3.7686E+00	5.43800E-04	3.26995E-05	9.85817E-01
3.6700E+02	3.7273E+00	5.79600E-04	3.37025E-05	9.86976E-01
3.6900E+02	3.6868E+00	5.54600E-04	3.30060E-05	9.88085E-01

3.7100E+02	3.6469E+00	5.01250E-04	3.14660E-05	9.89087E-01
3.7300E+02	3.6077E+00	5.24850E-04	3.21560E-05	9.90137E-01
3.7500E+02	3.5691E+00	5.25000E-04	3.21600E-05	9.91187E-01
3.7700E+02	3.5311E+00	4.40485E-04	2.96155E-05	9.92068E-01
3.7900E+02	3.4938E+00	5.61850E-04	3.32100E-05	9.93192E-01
3.8100E+02	3.4570E+00	5.37350E-04	3.25155E-05	9.94267E-01
3.8300E+02	3.4208E+00	5.35950E-04	3.24750E-05	9.95338E-01
3.8500E+02	3.3851E+00	5.46450E-04	3.27750E-05	9.96431E-01
3.8700E+02	3.3500E+00	5.54200E-04	3.29940E-05	9.97540E-01
3.8900E+02	3.3155E+00	4.99365E-04	3.14105E-05	9.98538E-01
3.9100E+02	3.2815E+00	5.02000E-04	3.14875E-05	9.99542E-01
3.9300E+02	3.2480E+00	4.78255E-04	3.07790E-05	1.00050E+00
3.9500E+02	3.2150E+00	4.41420E-04	2.96445E-05	1.00138E+00
3.9700E+02	3.1825E+00	5.21850E-04	3.20690E-05	1.00243E+00
3.9900E+02	3.1506E+00	4.65395E-04	3.03875E-05	1.00336E+00
4.0100E+02	3.1191E+00	4.98660E-04	3.13895E-05	1.00435E+00
4.0300E+02	3.0880E+00	4.77540E-04	3.07570E-05	1.00531E+00
4.0500E+02	3.0575E+00	4.98160E-04	3.13745E-05	1.00631E+00
4.0700E+02	3.0273E+00	5.05500E-04	3.15915E-05	1.00732E+00
4.0900E+02	2.9977E+00	4.86465E-04	3.10260E-05	1.00829E+00
4.1100E+02	2.9684E+00	4.85845E-04	3.10075E-05	1.00926E+00
4.1300E+02	2.9396E+00	4.65420E-04	3.03885E-05	1.01019E+00
4.1500E+02	2.9112E+00	4.43355E-04	2.97055E-05	1.01108E+00
4.1700E+02	2.8832E+00	5.03850E-04	3.15425E-05	1.01209E+00
4.1900E+02	2.8556E+00	4.83360E-04	3.09325E-05	1.01305E+00
4.2100E+02	2.8284E+00	4.57510E-04	3.01455E-05	1.01397E+00
4.2300E+02	2.8016E+00	4.57830E-04	3.01550E-05	1.01488E+00
4.2500E+02	2.7752E+00	4.45780E-04	2.97810E-05	1.01577E+00
4.2700E+02	2.7492E+00	4.54380E-04	3.00485E-05	1.01668E+00
4.2900E+02	2.7235E+00	3.85135E-04	2.78225E-05	1.01745E+00
4.3100E+02	2.6982E+00	4.26620E-04	2.91765E-05	1.01831E+00
4.3300E+02	2.6732E+00	4.49870E-04	2.99085E-05	1.01921E+00
4.3500E+02	2.6486E+00	4.05670E-04	2.85010E-05	1.02002E+00
4.3700E+02	2.6243E+00	4.16815E-04	2.88625E-05	1.02085E+00
4.3900E+02	2.6003E+00	4.65965E-04	3.04350E-05	1.02178E+00
4.4100E+02	2.5767E+00	4.33240E-04	2.93870E-05	1.02265E+00
4.4300E+02	2.5534E+00	4.15200E-04	2.88100E-05	1.02348E+00
4.4500E+02	2.5304E+00	4.42835E-04	2.96890E-05	1.02437E+00
4.4700E+02	2.5077E+00	3.75255E-04	2.74900E-05	1.02512E+00
4.4900E+02	2.4853E+00	3.79220E-04	2.76240E-05	1.02588E+00
4.5100E+02	2.4632E+00	3.71070E-04	2.73485E-05	1.02662E+00
4.5300E+02	2.4414E+00	3.40695E-04	2.62950E-05	1.02730E+00
4.5500E+02	2.4199E+00	3.77040E-04	2.75505E-05	1.02805E+00
4.5700E+02	2.3987E+00	3.73085E-04	2.74165E-05	1.02880E+00
4.5900E+02	2.3778E+00	3.77885E-04	2.75790E-05	1.02955E+00
4.6100E+02	2.3571E+00	3.40445E-04	2.62860E-05	1.03024E+00
4.6300E+02	2.3367E+00	3.65615E-04	2.71620E-05	1.03097E+00
4.6500E+02	2.3166E+00	3.25950E-04	2.57680E-05	1.03162E+00

4.6700E+02	2.2967E+00	3.10650E-04	2.52095E-05	1.03224E+00
4.6900E+02	2.2771E+00	2.90020E-04	2.44365E-05	1.03282E+00
4.7100E+02	2.2577E+00	3.11400E-04	2.52370E-05	1.03344E+00
4.7300E+02	2.2386E+00	3.17435E-04	2.54585E-05	1.03408E+00
4.7500E+02	2.2197E+00	3.55635E-04	2.68180E-05	1.03479E+00
4.7700E+02	2.2011E+00	3.11840E-04	2.52535E-05	1.03541E+00
4.7900E+02	2.1827E+00	3.10450E-04	2.52025E-05	1.03603E+00
4.8100E+02	2.1645E+00	2.83330E-04	2.41805E-05	1.03660E+00
4.8300E+02	2.1466E+00	2.87195E-04	2.43285E-05	1.03717E+00
4.8500E+02	2.1288E+00	2.30475E-04	2.20535E-05	1.03764E+00
4.8700E+02	2.1113E+00	2.47680E-04	2.27680E-05	1.03813E+00
4.8900E+02	2.0940E+00	2.20305E-04	2.16205E-05	1.03857E+00
4.9100E+02	2.0770E+00	2.16800E-04	2.14690E-05	1.03901E+00
4.9300E+02	2.0601E+00	2.45655E-04	2.26850E-05	1.03950E+00
4.9500E+02	2.0434E+00	2.26700E-04	2.18940E-05	1.03995E+00
4.9700E+02	2.0270E+00	2.21860E-04	2.16875E-05	1.04039E+00
4.9900E+02	2.0107E+00	1.91465E-04	2.03420E-05	1.04078E+00
5.0100E+02	1.9946E+00	2.02705E-04	2.08495E-05	1.04118E+00
5.0300E+02	1.9787E+00	2.39560E-04	2.24335E-05	1.04166E+00
5.0500E+02	1.9630E+00	2.10225E-04	2.11825E-05	1.04208E+00
5.0700E+02	1.9475E+00	1.96140E-04	2.05545E-05	1.04247E+00

^{7}Lithium-1.0 m.f.p.

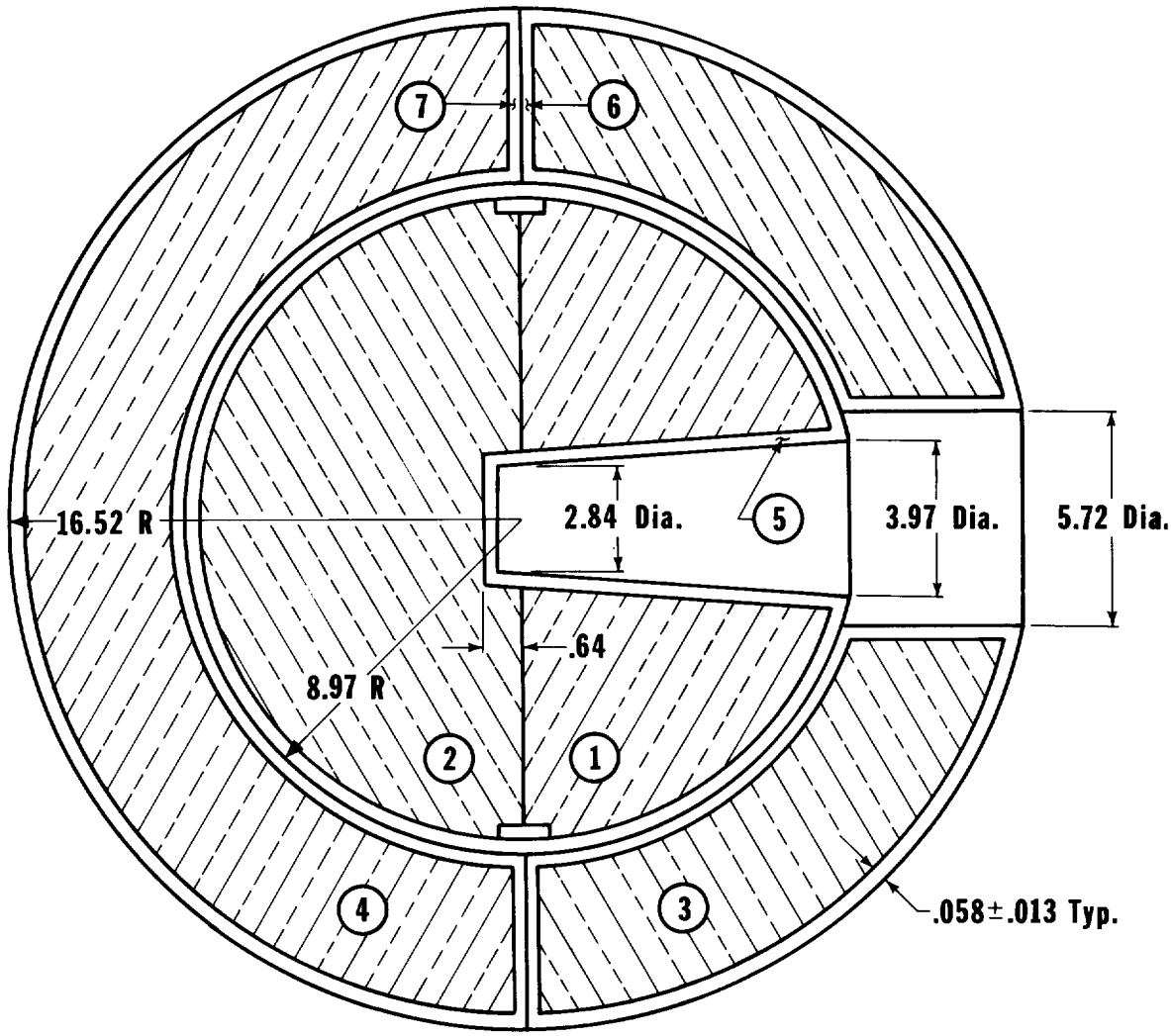

All Dimensions in Centimeters

zone	Mass in grams	Material
1	720	^{7}Li – 97.39%
2	761	
3	3753	^{6}Li – 2.61%
4	3859	
		Fe – 68.6%
5	609	Cr – 20.0%
6	3247	Ni – 8.4%
7	3141	Si – 2.0%
		Mn – 1.0%

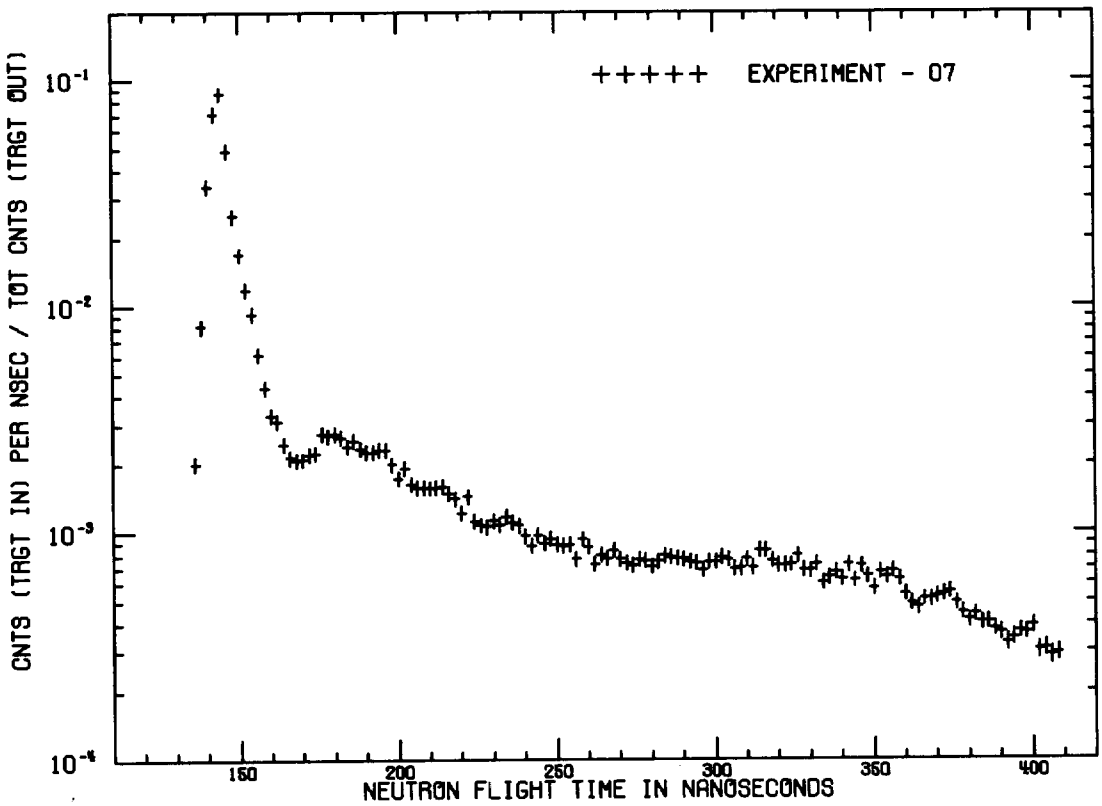

LITHIUM 7 - 1.0 M.F.P. - 30 DEG.

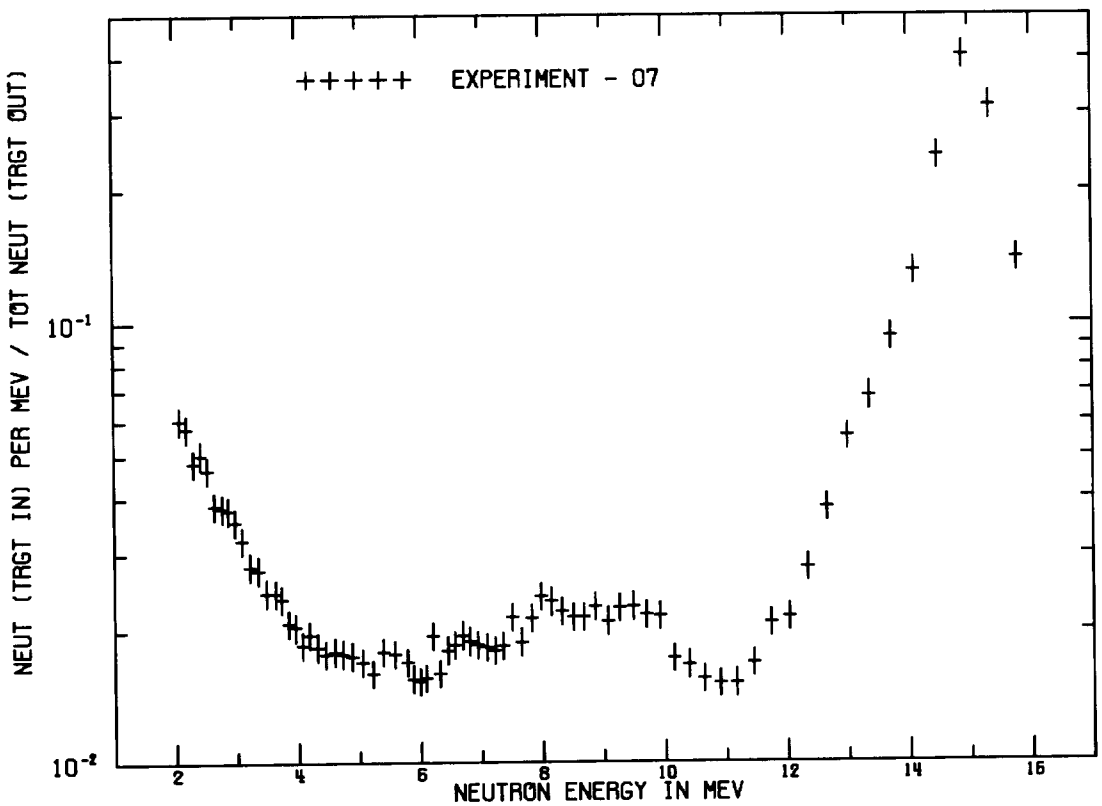

LITHIUM 7 - 1.0 M.F.P. - 30 DEG.

LITHIUM 7 - 1.0 M.F.P. - 30 DEG.
FLIGHTPATH = 765.20 CM DETECTOR = PILOT B FWHM = 4 NS

TIME(NS)	CALCULATED ENERGY(MEV)	CNT/NS/SOURCE	ERROR	INTEGRAL
1.3500E+02	1.7255E+01	3.13670E-04	2.55340E-05	6.27340E-04
1.3700E+02	1.6741E+01	2.01600E-03	5.55150E-05	4.65934E-03
1.3900E+02	1.6250E+01	8.15700E-03	1.08850E-04	2.09733E-02
1.4100E+02	1.5781E+01	3.37215E-02	2.19865E-04	8.84163E-02
1.4300E+02	1.5332E+01	7.06950E-02	3.17990E-04	2.29806E-01
1.4500E+02	1.4902E+01	8.70150E-02	3.52725E-04	4.03836E-01
1.4700E+02	1.4490E+01	4.85560E-02	2.63660E-04	5.00948E-01
1.4900E+02	1.4095E+01	2.51150E-02	1.89885E-04	5.51178E-01
1.5100E+02	1.3716E+01	1.68735E-02	1.55855E-04	5.84925E-01
1.5300E+02	1.3352E+01	1.17935E-02	1.30535E-04	6.08512E-01
1.5500E+02	1.3002E+01	9.21900E-03	1.15600E-04	6.26950E-01
1.5700E+02	1.2666E+01	6.14400E-03	9.47350E-05	6.39238E-01
1.5900E+02	1.2343E+01	4.35000E-03	8.00850E-05	6.47938E-01
1.6100E+02	1.2033E+01	3.27655E-03	6.98650E-05	6.54491E-01
1.6300E+02	1.1734E+01	3.09875E-03	6.80250E-05	6.60689E-01
1.6500E+02	1.1446E+01	2.44740E-03	6.08100E-05	6.65584E-01
1.6700E+02	1.1169E+01	2.14530E-03	5.71550E-05	6.69874E-01
1.6900E+02	1.0901E+01	2.08710E-03	5.64250E-05	6.74049E-01
1.7100E+02	1.0643E+01	2.09620E-03	5.65400E-05	6.78241E-01
1.7300E+02	1.0395E+01	2.20415E-03	5.78850E-05	6.82649E-01
1.7500E+02	1.0154E+01	2.23210E-03	5.82300E-05	6.87113E-01
1.7700E+02	9.9227E+00	2.72270E-03	6.39600E-05	6.92559E-01
1.7900E+02	9.6987E+00	2.67710E-03	6.34500E-05	6.97913E-01
1.8100E+02	9.4824E+00	2.72480E-03	6.39850E-05	7.03363E-01
1.8300E+02	9.2732E+00	2.63440E-03	6.29650E-05	7.08631E-01
1.8500E+02	9.0708E+00	2.40320E-03	6.02900E-05	7.13438E-01
1.8700E+02	8.8751E+00	2.52960E-03	6.17650E-05	7.18497E-01
1.8900E+02	8.6857E+00	2.33460E-03	5.94700E-05	7.23166E-01
1.9100E+02	8.5023E+00	2.26955E-03	5.86850E-05	7.27705E-01
1.9300E+02	8.3246E+00	2.26495E-03	5.86300E-05	7.32235E-01
1.9500E+02	8.1525E+00	2.31640E-03	5.92500E-05	7.36868E-01
1.9700E+02	7.9857E+00	2.30575E-03	5.91250E-05	7.41480E-01
1.9900E+02	7.8240E+00	1.99725E-03	5.52750E-05	7.45474E-01
2.0100E+02	7.6672E+00	1.72040E-03	5.15750E-05	7.48915E-01
2.0300E+02	7.5150E+00	1.92005E-03	5.42700E-05	7.52755E-01
2.0500E+02	7.3674E+00	1.62390E-03	5.02250E-05	7.56003E-01
2.0700E+02	7.2241E+00	1.56985E-03	4.94485E-05	7.59142E-01
2.0900E+02	7.0849E+00	1.57590E-03	4.95360E-05	7.62294E-01
2.1100E+02	6.9498E+00	1.56425E-03	4.93680E-05	7.65423E-01
2.1300E+02	6.8184E+00	1.57040E-03	4.94565E-05	7.68564E-01
2.1500E+02	6.6908E+00	1.58725E-03	4.96990E-05	7.71738E-01
2.1700E+02	6.5668E+00	1.48155E-03	4.81570E-05	7.74701E-01
2.1900E+02	6.4461E+00	1.40495E-03	4.70085E-05	7.77511E-01
2.2100E+02	6.3288E+00	1.21310E-03	4.39985E-05	7.79937E-01
2.2300E+02	6.2147E+00	1.44050E-03	4.75450E-05	7.82818E-01

2.2500E+02	6.1036E+00	1.12150E-03	4.24870E-05	7.85061E-01
2.2700E+02	5.9955E+00	1.07515E-03	4.17010E-05	7.87212E-01
2.2900E+02	5.8903E+00	1.06000E-03	4.14410E-05	7.89332E-01
2.3100E+02	5.7878E+00	1.12515E-03	4.25480E-05	7.91582E-01
2.3300E+02	5.6879E+00	1.08140E-03	4.18080E-05	7.93745E-01
2.3500E+02	5.5907E+00	1.17415E-03	4.33625E-05	7.96093E-01
2.3700E+02	5.4959E+00	1.10370E-03	4.21870E-05	7.98300E-01
2.3900E+02	5.4035E+00	1.07305E-03	4.16655E-05	8.00446E-01
2.4100E+02	5.3134E+00	9.66400E-04	3.97960E-05	8.02379E-01
2.4300E+02	5.2256E+00	8.78550E-04	3.81885E-05	8.04136E-01
2.4500E+02	5.1399E+00	9.69500E-04	3.98520E-05	8.06075E-01
2.4700E+02	5.0564E+00	8.92300E-04	3.84445E-05	8.07860E-01
2.4900E+02	4.9748E+00	9.41700E-04	3.93510E-05	8.09743E-01
2.5100E+02	4.8952E+00	8.87500E-04	3.83550E-05	8.11518E-01
2.5300E+02	4.8175E+00	8.78450E-04	3.81865E-05	8.13275E-01
2.5500E+02	4.7417E+00	8.83650E-04	3.82830E-05	8.15043E-01
2.5700E+02	4.6676E+00	7.64700E-04	3.59970E-05	8.16572E-01
2.5900E+02	4.5953E+00	9.34000E-04	3.92105E-05	8.18440E-01
2.6100E+02	4.5246E+00	8.63700E-04	3.79095E-05	8.20167E-01
2.6300E+02	4.4556E+00	7.22250E-04	3.51455E-05	8.21612E-01
2.6500E+02	4.3881E+00	7.98850E-04	3.66685E-05	8.23210E-01
2.6700E+02	4.3222E+00	7.67400E-04	3.60510E-05	8.24744E-01
2.6900E+02	4.2577E+00	8.34000E-04	3.73465E-05	8.26412E-01
2.7100E+02	4.1947E+00	7.63900E-04	3.59820E-05	8.27940E-01
2.7300E+02	4.1330E+00	7.32650E-04	3.53565E-05	8.29405E-01
2.7500E+02	4.0728E+00	7.15100E-04	3.49995E-05	8.30836E-01
2.7700E+02	4.0138E+00	7.61750E-04	3.59390E-05	8.32359E-01
2.7900E+02	3.9561E+00	7.50500E-04	3.57150E-05	8.33860E-01
2.8100E+02	3.8996E+00	7.09450E-04	3.48845E-05	8.35279E-01
2.8300E+02	3.8443E+00	7.46800E-04	3.56405E-05	8.36773E-01
2.8500E+02	3.7903E+00	7.92000E-04	3.65350E-05	8.38357E-01
2.8700E+02	3.7373E+00	7.80150E-04	3.63025E-05	8.39917E-01
2.8900E+02	3.6854E+00	7.68550E-04	3.60735E-05	8.41454E-01
2.9100E+02	3.6347E+00	7.64100E-04	3.59855E-05	8.42982E-01
2.9300E+02	3.5849E+00	7.42450E-04	3.55535E-05	8.44467E-01
2.9500E+02	3.5362E+00	7.35350E-04	3.54105E-05	8.45938E-01
2.9700E+02	3.4885E+00	6.83300E-04	3.43460E-05	8.47304E-01
2.9900E+02	3.4417E+00	7.44950E-04	3.56040E-05	8.48794E-01
3.0100E+02	3.3959E+00	7.43150E-04	3.55675E-05	8.50281E-01
3.0300E+02	3.3510E+00	7.76200E-04	3.62245E-05	8.51833E-01
3.0500E+02	3.3069E+00	7.61100E-04	3.59255E-05	8.53355E-01
3.0700E+02	3.2638E+00	6.91050E-04	3.45060E-05	8.54737E-01
3.0900E+02	3.2214E+00	6.95950E-04	3.46080E-05	8.56129E-01
3.1100E+02	3.1799E+00	7.64600E-04	3.59950E-05	8.57658E-01
3.1300E+02	3.1392E+00	6.99100E-04	3.46730E-05	8.59057E-01
3.1500E+02	3.0993E+00	8.32700E-04	3.73220E-05	8.60722E-01
3.1700E+02	3.0601E+00	8.37050E-04	3.74040E-05	8.62396E-01
3.1900E+02	3.0217E+00	7.50550E-04	3.57155E-05	8.63897E-01

3.2100E+02	2.9840E+00	7.16300E-04	3.50250E-05	8.65330E-01
3.2300E+02	2.9469E+00	7.18000E-04	3.50590E-05	8.66766E-01
3.2500E+02	2.9106E+00	7.21700E-04	3.51345E-05	8.68209E-01
3.2700E+02	2.8750E+00	7.91350E-04	3.65215E-05	8.69792E-01
3.2900E+02	2.8399E+00	6.84250E-04	3.43655E-05	8.71160E-01
3.3100E+02	2.8056E+00	6.79400E-04	3.42640E-05	8.72519E-01
3.3300E+02	2.7718E+00	7.24950E-04	3.52005E-05	8.73969E-01
3.3500E+02	2.7387E+00	5.98550E-04	3.25370E-05	8.75166E-01
3.3700E+02	2.7061E+00	6.33400E-04	3.32920E-05	8.76433E-01
3.3900E+02	2.6742E+00	6.68600E-04	3.40390E-05	8.77770E-01
3.4100E+02	2.6428E+00	6.22600E-04	3.30595E-05	8.79015E-01
3.4300E+02	2.6119E+00	7.20550E-04	3.51115E-05	8.80457E-01
3.4500E+02	2.5816E+00	6.12600E-04	3.28435E-05	8.81682E-01
3.4700E+02	2.5518E+00	7.12000E-04	3.49370E-05	8.83106E-01
3.4900E+02	2.5225E+00	6.41450E-04	3.34645E-05	8.84389E-01
3.5100E+02	2.4937E+00	5.68950E-04	3.18805E-05	8.85527E-01
3.5300E+02	2.4654E+00	6.65200E-04	3.39670E-05	8.86857E-01
3.5500E+02	2.4376E+00	6.37050E-04	3.33705E-05	8.88131E-01
3.5700E+02	2.4103E+00	6.77000E-04	3.42145E-05	8.89485E-01
3.5900E+02	2.3834E+00	6.21550E-04	3.30380E-05	8.90728E-01
3.6100E+02	2.3570E+00	5.35650E-04	3.11265E-05	8.91799E-01
3.6300E+02	2.3310E+00	4.88205E-04	3.00190E-05	8.92776E-01
3.6500E+02	2.3054E+00	4.66855E-04	2.95070E-05	8.93710E-01
3.6700E+02	2.2803E+00	5.08000E-04	3.04860E-05	8.94726E-01
3.6900E+02	2.2555E+00	5.07250E-04	3.04680E-05	8.95740E-01
3.7100E+02	2.2312E+00	5.22000E-04	3.08125E-05	8.96784E-01
3.7300E+02	2.2072E+00	5.33550E-04	3.10785E-05	8.97851E-01
3.7500E+02	2.1837E+00	5.47400E-04	3.13950E-05	8.98946E-01
3.7700E+02	2.1605E+00	4.90055E-04	3.00630E-05	8.99926E-01
3.7900E+02	2.1377E+00	4.43855E-04	2.89450E-05	9.00814E-01
3.8100E+02	2.1152E+00	4.11120E-04	2.81265E-05	9.01636E-01
3.8300E+02	2.0931E+00	4.35405E-04	2.87360E-05	9.02507E-01
3.8500E+02	2.0713E+00	4.01005E-04	2.78685E-05	9.03309E-01
3.8700E+02	2.0499E+00	4.03920E-04	2.79430E-05	9.04117E-01
3.8900E+02	2.0288E+00	3.75930E-04	2.72185E-05	9.04869E-01
3.9100E+02	2.0080E+00	3.62640E-04	2.68680E-05	9.05594E-01
3.9300E+02	1.9876E+00	3.27790E-04	2.59255E-05	9.06249E-01
3.9500E+02	1.9675E+00	3.43865E-04	2.63645E-05	9.06937E-01
3.9700E+02	1.9476E+00	3.67705E-04	2.70020E-05	9.07673E-01
3.9900E+02	1.9281E+00	3.63255E-04	2.68840E-05	9.08399E-01
4.0100E+02	1.9088E+00	3.88170E-04	2.75380E-05	9.09175E-01
4.0300E+02	1.8899E+00	3.03035E-04	2.52350E-05	9.09781E-01
4.0500E+02	1.8712E+00	3.08090E-04	2.53775E-05	9.10398E-01
4.0700E+02	1.8528E+00	2.85675E-04	2.47390E-05	9.10969E-01
4.0900E+02	1.8347E+00	2.94290E-04	2.49865E-05	9.11558E-01

^{7}Lithium-1.6 m.f.p.

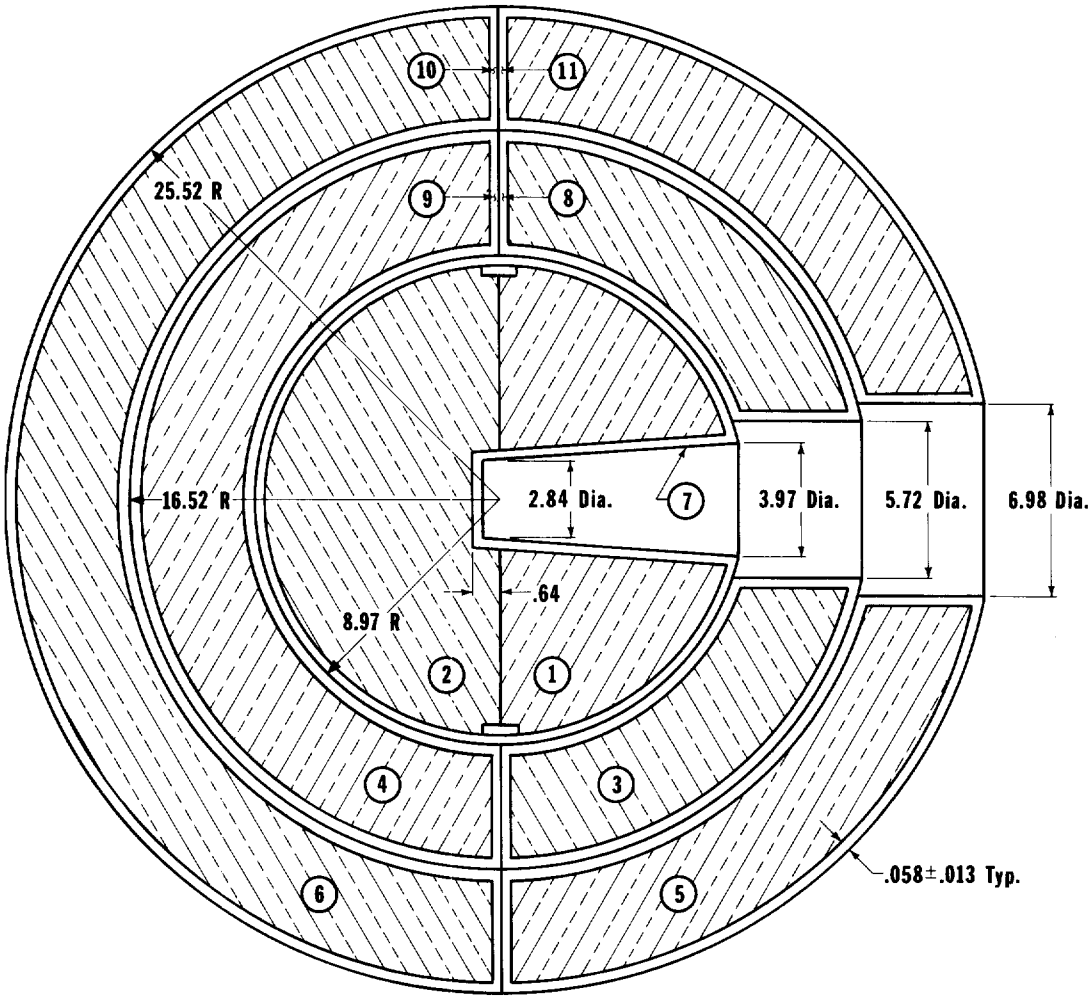

All Dimensions in Centimeters

zone	Mass in grams	Material
1	720	
2	761	^{7}Li – 97.39%
3	3753	
4	3859	^{6}Li – 2.61%
5	12433	
6	12620	
7	609	Fe – 68.6%
8	3247	Cr – 20.0%
9	3141	Ni – 8.4%
10	7192	Si – 2.0%
11	6880	Mn – 1.0%

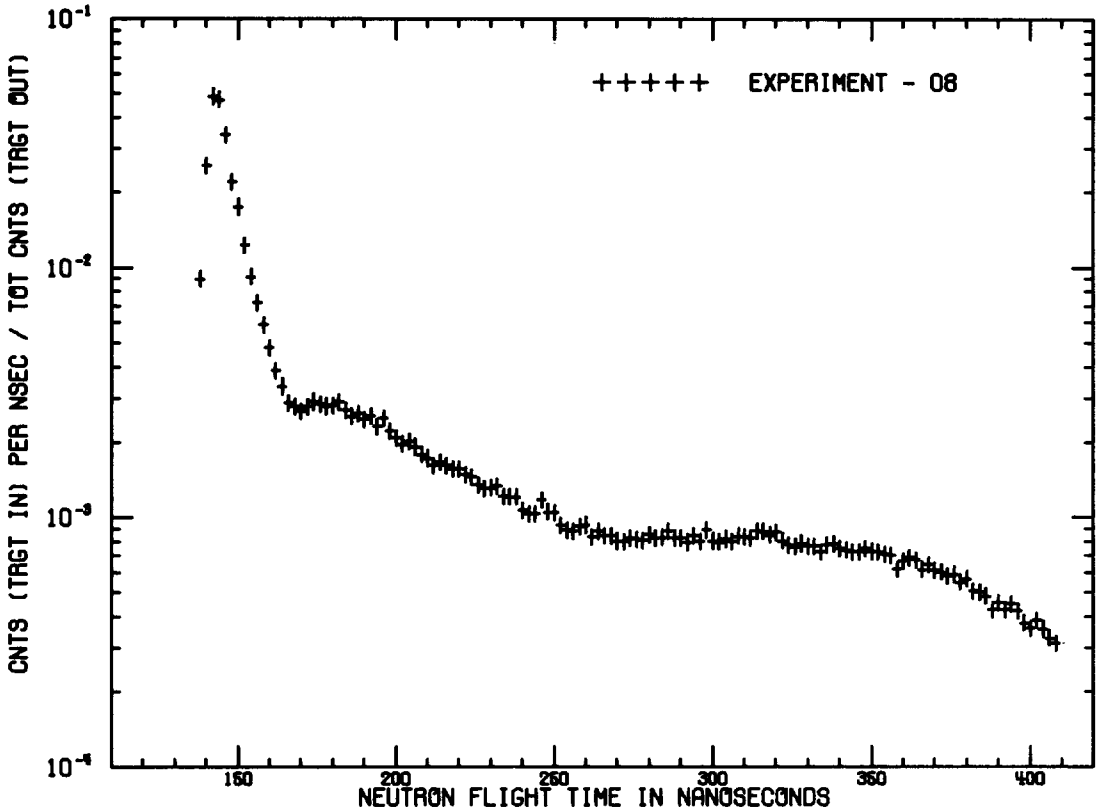

LITHIUM 7 - 1.6 M.F.P. - 30 DEG.

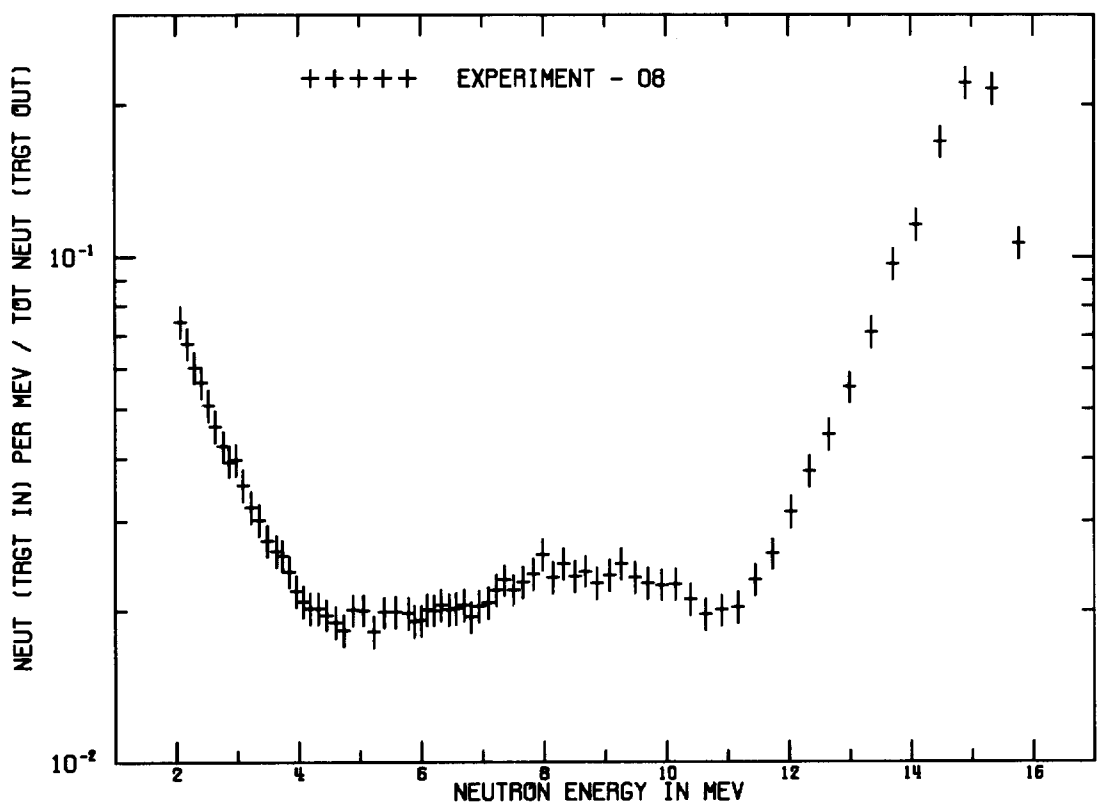

LITHIUM 7 - 1.6 M.F.P. - 30 DEG.

LITHIUM 7 - 1.6 M.F.P. - 30 DEG.
FLIGHTPATH = 765.20 CM DETECTOR = PILOT B FWHM = 4 NS

TIME(NS)	CALCULATED ENERGY(MEV)	CNT/NS/SOURCE	ERROR	INTEGRAL
1.3700E+02	1.6741E+01	2.47060E-03	4.36180E-05	4.94120E-03
1.3900E+02	1.6250E+01	8.98150E-03	8.10450E-05	2.29042E-02
1.4100E+02	1.5781E+01	2.55930E-02	1.35915E-04	7.40902E-02
1.4300E+02	1.5332E+01	4.87310E-02	1.87225E-04	1.71552E-01
1.4500E+02	1.4902E+01	4.72690E-02	1.84405E-04	2.66090E-01
1.4700E+02	1.4490E+01	3.41680E-02	1.56900E-04	3.34426E-01
1.4900E+02	1.4095E+01	2.21175E-02	1.26420E-04	3.78661E-01
1.5100E+02	1.3716E+01	1.75430E-02	1.12710E-04	4.13747E-01
1.5300E+02	1.3352E+01	1.22675E-02	9.44650E-05	4.38282E-01
1.5500E+02	1.3002E+01	9.17800E-03	8.19100E-05	4.56638E-01
1.5700E+02	1.2666E+01	7.19150E-03	7.27000E-05	4.71021E-01
1.5900E+02	1.2343E+01	5.89000E-03	6.59750E-05	4.82801E-01
1.6100E+02	1.2033E+01	4.77620E-03	5.96200E-05	4.92354E-01
1.6300E+02	1.1734E+01	3.84230E-03	5.37150E-05	5.00038E-01
1.6500E+02	1.1446E+01	3.32865E-03	5.01750E-05	5.06695E-01
1.6700E+02	1.1169E+01	2.86090E-03	4.67145E-05	5.12417E-01
1.6900E+02	1.0901E+01	2.76425E-03	4.59670E-05	5.17946E-01
1.7100E+02	1.0643E+01	2.64575E-03	4.50340E-05	5.23237E-01
1.7300E+02	1.0395E+01	2.77505E-03	4.60515E-05	5.28787E-01
1.7500E+02	1.0154E+01	2.89965E-03	4.70105E-05	5.34587E-01
1.7700E+02	9.9227E+00	2.82800E-03	4.64610E-05	5.40243E-01
1.7900E+02	9.6987E+00	2.77815E-03	4.60750E-05	5.45799E-01
1.8100E+02	9.4824E+00	2.78830E-03	4.61540E-05	5.51376E-01
1.8300E+02	9.2732E+00	2.89270E-03	4.69575E-05	5.57161E-01
1.8500E+02	9.0708E+00	2.68115E-03	4.53145E-05	5.62523E-01
1.8700E+02	8.8751E+00	2.53030E-03	4.41060E-05	5.67584E-01
1.8900E+02	8.6857E+00	2.59955E-03	4.46650E-05	5.72783E-01
1.9100E+02	8.5023E+00	2.46375E-03	4.35620E-05	5.77710E-01
1.9300E+02	8.3246E+00	2.53680E-03	4.41585E-05	5.82784E-01
1.9500E+02	8.1525E+00	2.30590E-03	4.22435E-05	5.87396E-01
1.9700E+02	7.9857E+00	2.48170E-03	4.37095E-05	5.92359E-01
1.9900E+02	7.8240E+00	2.21220E-03	4.14410E-05	5.96784E-01
2.0100E+02	7.6672E+00	2.07940E-03	4.02765E-05	6.00942E-01
2.0300E+02	7.5150E+00	1.95965E-03	3.91970E-05	6.04862E-01
2.0500E+02	7.3674E+00	2.01415E-03	3.96920E-05	6.08890E-01
2.0700E+02	7.2241E+00	1.91560E-03	3.87920E-05	6.12721E-01
2.0900E+02	7.0849E+00	1.77940E-03	3.75130E-05	6.16280E-01
2.1100E+02	6.9498E+00	1.72070E-03	3.69480E-05	6.19721E-01
2.1300E+02	6.8184E+00	1.60665E-03	3.58250E-05	6.22935E-01
2.1500E+02	6.6908E+00	1.65965E-03	3.63515E-05	6.26254E-01
2.1700E+02	6.5668E+00	1.60500E-03	3.58085E-05	6.29464E-01
2.1900E+02	6.4461E+00	1.55605E-03	3.53150E-05	6.32576E-01
2.2100E+02	6.3288E+00	1.55250E-03	3.52795E-05	6.35681E-01
2.2300E+02	6.2147E+00	1.47785E-03	3.45125E-05	6.38637E-01
2.2500E+02	6.1036E+00	1.44200E-03	3.41385E-05	6.41521E-01

2.2700E+02	5.9955E+00	1.33725E-03	3.30205E-05	6.44195E-01
2.2900E+02	5.8903E+00	1.29750E-03	3.25865E-05	6.46790E-01
2.3100E+02	5.7878E+00	1.30855E-03	3.27075E-05	6.49407E-01
2.3300E+02	5.6879E+00	1.32580E-03	3.28965E-05	6.52059E-01
2.3500E+02	5.5907E+00	1.20355E-03	3.15365E-05	6.54466E-01
2.3700E+02	5.4959E+00	1.20165E-03	3.15150E-05	6.56869E-01
2.3900E+02	5.4035E+00	1.19985E-03	3.14945E-05	6.59269E-01
2.4100E+02	5.3134E+00	1.06100E-03	2.98730E-05	6.61391E-01
2.4300E+02	5.2256E+00	1.03015E-03	2.95010E-05	6.63451E-01
2.4500E+02	5.1399E+00	1.02835E-03	2.94785E-05	6.65508E-01
2.4700E+02	5.0564E+00	1.16650E-03	3.11125E-05	6.67841E-01
2.4900E+02	4.9748E+00	1.04630E-03	2.96965E-05	6.69934E-01
2.5100E+02	4.8952E+00	1.04170E-03	2.96410E-05	6.72017E-01
2.5300E+02	4.8175E+00	9.25850E-04	2.82055E-05	6.73869E-01
2.5500E+02	4.7417E+00	8.87600E-04	2.77155E-05	6.75644E-01
2.5700E+02	4.6676E+00	8.76250E-04	2.75680E-05	6.77397E-01
2.5900E+02	4.5953E+00	9.11950E-04	2.80285E-05	6.79220E-01
2.6100E+02	4.5246E+00	9.27950E-04	2.82320E-05	6.81076E-01
2.6300E+02	4.4556E+00	8.28900E-04	2.69460E-05	6.82734E-01
2.6500E+02	4.3881E+00	8.75700E-04	2.75615E-05	6.84486E-01
2.6700E+02	4.3222E+00	8.40350E-04	2.70980E-05	6.86166E-01
2.6900E+02	4.2577E+00	8.41650E-04	2.71150E-05	6.87850E-01
2.7100E+02	4.1947E+00	7.99250E-04	2.65485E-05	6.89448E-01
2.7300E+02	4.1330E+00	7.94000E-04	2.64775E-05	6.91036E-01
2.7500E+02	4.0728E+00	8.22300E-04	2.68580E-05	6.92681E-01
2.7700E+02	4.0138E+00	8.14850E-04	2.67585E-05	6.94310E-01
2.7900E+02	3.9561E+00	8.02550E-04	2.65935E-05	6.95915E-01
2.8100E+02	3.8996E+00	8.48350E-04	2.72030E-05	6.97612E-01
2.8300E+02	3.8443E+00	8.20550E-04	2.68350E-05	6.99253E-01
2.8500E+02	3.7903E+00	8.26450E-04	2.69135E-05	7.00906E-01
2.8700E+02	3.7373E+00	8.76100E-04	2.75665E-05	7.02658E-01
2.8900E+02	3.6854E+00	8.24700E-04	2.68900E-05	7.04308E-01
2.9100E+02	3.6347E+00	8.24450E-04	2.68870E-05	7.05957E-01
2.9300E+02	3.5849E+00	7.91200E-04	2.64400E-05	7.07539E-01
2.9500E+02	3.5362E+00	8.40050E-04	2.70940E-05	7.09219E-01
2.9700E+02	3.4885E+00	7.94250E-04	2.64815E-05	7.10808E-01
2.9900E+02	3.4417E+00	8.87850E-04	2.77185E-05	7.12583E-01
3.0100E+02	3.3959E+00	7.98800E-04	2.65430E-05	7.14181E-01
3.0300E+02	3.3510E+00	7.93250E-04	2.64675E-05	7.15767E-01
3.0500E+02	3.3069E+00	8.16450E-04	2.67795E-05	7.17400E-01
3.0700E+02	3.2638E+00	7.96950E-04	2.65175E-05	7.18994E-01
3.0900E+02	3.2214E+00	8.35950E-04	2.70395E-05	7.20666E-01
3.1100E+02	3.1799E+00	8.29650E-04	2.69560E-05	7.22325E-01
3.1300E+02	3.1392E+00	8.19750E-04	2.68235E-05	7.23965E-01
3.1500E+02	3.0993E+00	8.75250E-04	2.75555E-05	7.25715E-01
3.1700E+02	3.0601E+00	8.72650E-04	2.75220E-05	7.27461E-01
3.1900E+02	3.0217E+00	8.44350E-04	2.71510E-05	7.29149E-01
3.2100E+02	2.9840E+00	8.67700E-04	2.74570E-05	7.30885E-01

3.2300E+02	2.9469E+00	8.00850E-04	2.65705E-05	7.32487E-01
3.2500E+02	2.9106E+00	7.73650E-04	2.62010E-05	7.34034E-01
3.2700E+02	2.8750E+00	7.59850E-04	2.60115E-05	7.35554E-01
3.2900E+02	2.8399E+00	7.82850E-04	2.63260E-05	7.37119E-01
3.3100E+02	2.8056E+00	7.64900E-04	2.60805E-05	7.38649E-01
3.3300E+02	2.7718E+00	7.63700E-04	2.60645E-05	7.40176E-01
3.3500E+02	2.7387E+00	7.20900E-04	2.54690E-05	7.41618E-01
3.3700E+02	2.7061E+00	7.72850E-04	2.61900E-05	7.43164E-01
3.3900E+02	2.6742E+00	7.80650E-04	2.62965E-05	7.44725E-01
3.4100E+02	2.6428E+00	7.48900E-04	2.58605E-05	7.46223E-01
3.4300E+02	2.6119E+00	7.36000E-04	2.56810E-05	7.47695E-01
3.4500E+02	2.5816E+00	7.23900E-04	2.55115E-05	7.49143E-01
3.4700E+02	2.5518E+00	7.24500E-04	2.55195E-05	7.50592E-01
3.4900E+02	2.5225E+00	7.48700E-04	2.58580E-05	7.52089E-01
3.5100E+02	2.4937E+00	7.26350E-04	2.55460E-05	7.53542E-01
3.5300E+02	2.4654E+00	7.21000E-04	2.54705E-05	7.54984E-01
3.5500E+02	2.4376E+00	7.08150E-04	2.52895E-05	7.56400E-01
3.5700E+02	2.4103E+00	6.98500E-04	2.51520E-05	7.57797E-01
3.5900E+02	2.3834E+00	6.18500E-04	2.39855E-05	7.59034E-01
3.6100E+02	2.3570E+00	6.64300E-04	2.46600E-05	7.60363E-01
3.6300E+02	2.3310E+00	6.85150E-04	2.49610E-05	7.61733E-01
3.6500E+02	2.3054E+00	6.70400E-04	2.47485E-05	7.63074E-01
3.6700E+02	2.2803E+00	6.14050E-04	2.39190E-05	7.64302E-01
3.6900E+02	2.2555E+00	6.45500E-04	2.43855E-05	7.65593E-01
3.7100E+02	2.2312E+00	6.09550E-04	2.38515E-05	7.66812E-01
3.7300E+02	2.2072E+00	6.00450E-04	2.37145E-05	7.68013E-01
3.7500E+02	2.1837E+00	5.78000E-04	2.33730E-05	7.69169E-01
3.7700E+02	2.1605E+00	5.87250E-04	2.35140E-05	7.70344E-01
3.7900E+02	2.1377E+00	5.45450E-04	2.28685E-05	7.71434E-01
3.8100E+02	2.1152E+00	5.63350E-04	2.31470E-05	7.72561E-01
3.8300E+02	2.0931E+00	5.01950E-04	2.21765E-05	7.73565E-01
3.8500E+02	2.0713E+00	4.99580E-04	2.21380E-05	7.74564E-01
3.8700E+02	2.0499E+00	4.80165E-04	2.18215E-05	7.75525E-01
3.8900E+02	2.0288E+00	4.25295E-04	2.09010E-05	7.76375E-01
3.9100E+02	2.0080E+00	4.53395E-04	2.13775E-05	7.77282E-01
3.9300E+02	1.9876E+00	4.26025E-04	2.09135E-05	7.78134E-01
3.9500E+02	1.9675E+00	4.48790E-04	2.13000E-05	7.79032E-01
3.9700E+02	1.9476E+00	4.21645E-04	2.08385E-05	7.79875E-01
3.9900E+02	1.9281E+00	3.75785E-04	2.00345E-05	7.80626E-01
4.0100E+02	1.9088E+00	3.58130E-04	1.97160E-05	7.81343E-01
4.0300E+02	1.8899E+00	3.85900E-04	2.02145E-05	7.82115E-01
4.0500E+02	1.8712E+00	3.56095E-04	1.96790E-05	7.82827E-01
4.0700E+02	1.8528E+00	3.27300E-04	1.91475E-05	7.83481E-01
4.0900E+02	1.8347E+00	3.12235E-04	1.88635E-05	7.84106E-01

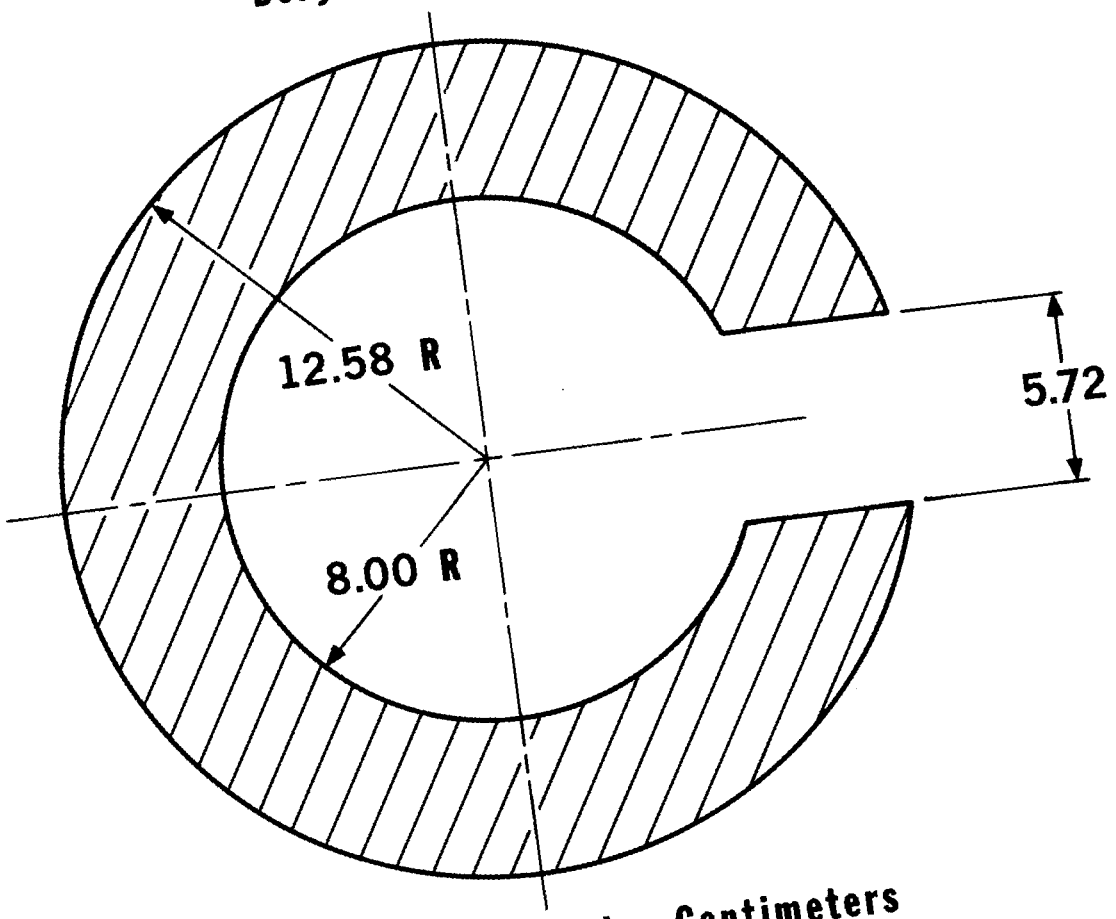

All Dimensions in Centimeters

Mass = 11,144 grams

99.99% Be

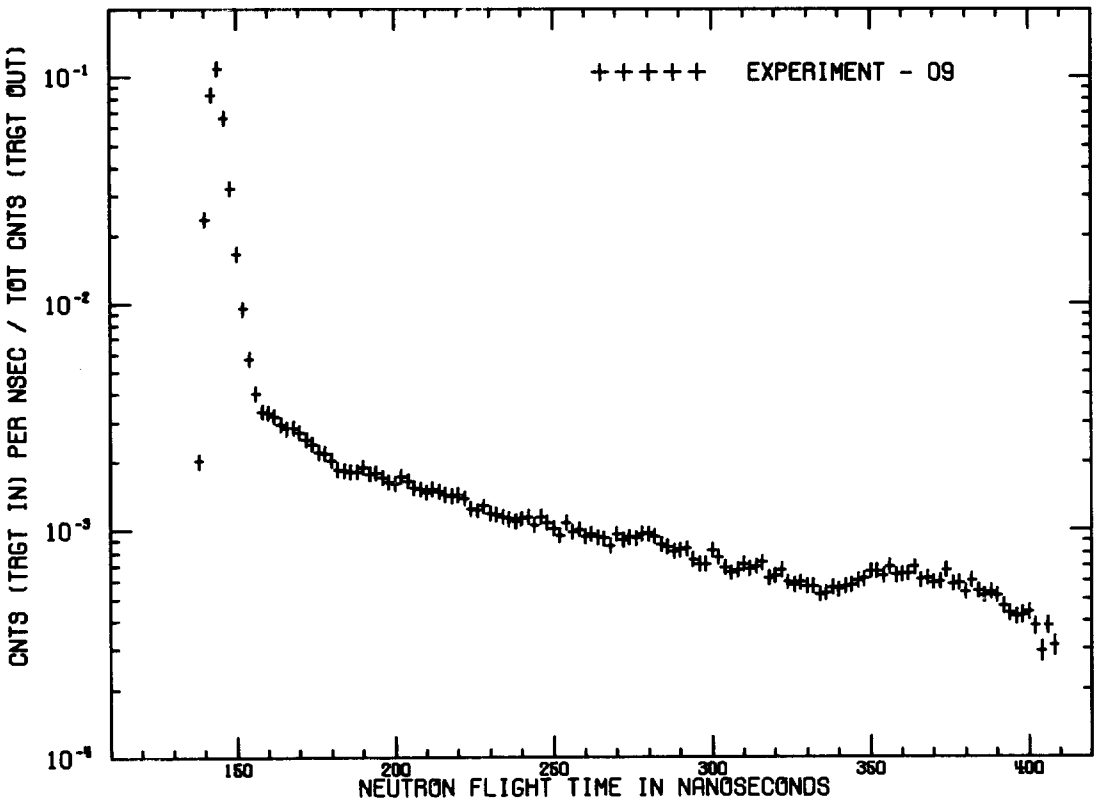

BERYLLIUM - 0.8 M.F.P. - 30 DEG.

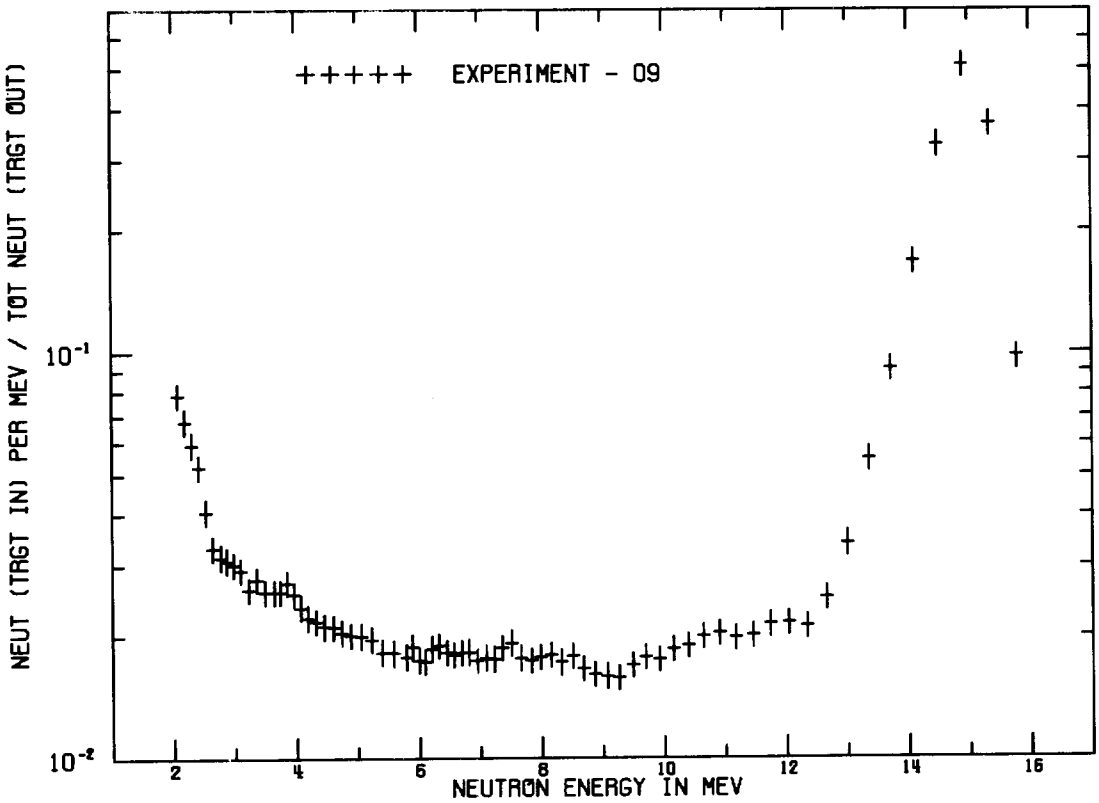

BERYLLIUM - 0.8 M.F.P. - 30 DEG.

BERYLLIUM - 0.8 M.F.P. - 30 DEG.
FLIGHTPATH = 765.20 CM DETECTOR = PILOT B FWHM = 4 NS

TIME(NS)	CALCULATED ENERGY(MEV)	CNT/NS/SOURCE	ERROR	INTEGRAL
1.3700E+02	1.6741E+01	1.61380E-04	2.43035E-05	3.22760E-04
1.3900E+02	1.6250E+01	2.02055E-03	6.46050E-05	4.36386E-03
1.4100E+02	1.5781E+01	2.35735E-02	2.13795E-04	5.15109E-02
1.4300E+02	1.5332E+01	8.31050E-02	4.00550E-04	2.17721E-01
1.4500E+02	1.4902E+01	1.09620E-01	4.59930E-04	4.36961E-01
1.4700E+02	1.4490E+01	6.61500E-02	3.57430E-04	5.69261E-01
1.4900E+02	1.4095E+01	3.21740E-02	2.49565E-04	6.33609E-01
1.5100E+02	1.3716E+01	1.65595E-02	1.79420E-04	6.66728E-01
1.5300E+02	1.3352E+01	9.48200E-03	1.36210E-04	6.85692E-01
1.5500E+02	1.3002E+01	5.68250E-03	1.05975E-04	6.97057E-01
1.5700E+02	1.2666E+01	4.02635E-03	8.96600E-05	7.05110E-01
1.5900E+02	1.2343E+01	3.31810E-03	8.16950E-05	7.11746E-01
1.6100E+02	1.2033E+01	3.29195E-03	8.13850E-05	7.18330E-01
1.6300E+02	1.1734E+01	3.18175E-03	8.00700E-05	7.24693E-01
1.6500E+02	1.1446E+01	2.91055E-03	7.67400E-05	7.30514E-01
1.6700E+02	1.1169E+01	2.80370E-03	7.53850E-05	7.36122E-01
1.6900E+02	1.0901E+01	2.81890E-03	7.55800E-05	7.41759E-01
1.7100E+02	1.0643E+01	2.69175E-03	7.39400E-05	7.47143E-01
1.7300E+02	1.0395E+01	2.50225E-03	7.14250E-05	7.52147E-01
1.7500E+02	1.0154E+01	2.39665E-03	6.99900E-05	7.56941E-01
1.7700E+02	9.9227E+00	2.20785E-03	6.73400E-05	7.61356E-01
1.7900E+02	9.6987E+00	2.18230E-03	6.69700E-05	7.65721E-01
1.8100E+02	9.4824E+00	2.03360E-03	6.47950E-05	7.69788E-01
1.8300E+02	9.2732E+00	1.84480E-03	6.19250E-05	7.73478E-01
1.8500E+02	9.0708E+00	1.82340E-03	6.15900E-05	7.77125E-01
1.8700E+02	8.8751E+00	1.80040E-03	6.12300E-05	7.80725E-01
1.8900E+02	8.6857E+00	1.80615E-03	6.13200E-05	7.84338E-01
1.9100E+02	8.5023E+00	1.88710E-03	6.25800E-05	7.88112E-01
1.9300E+02	8.3246E+00	1.77105E-03	6.07700E-05	7.91654E-01
1.9500E+02	8.1525E+00	1.78850E-03	6.10450E-05	7.95231E-01
1.9700E+02	7.9857E+00	1.70645E-03	5.97350E-05	7.98644E-01
1.9900E+02	7.8240E+00	1.62740E-03	5.84450E-05	8.01899E-01
2. 100E+02	7.6672E+00	1.61360E-03	5.82200E-05	8.05126E-01
2.0300E+02	7.5150E+00	1.72315E-03	6.00050E-05	8.08572E-01
2.0500E+02	7.3674E+00	1.64175E-03	5.86800E-05	8.11856E-01
2.0700E+02	7.2241E+00	1.53455E-03	5.68950E-05	8.14925E-01
2.0900E+02	7.0849E+00	1.52280E-03	5.66950E-05	8.17970E-01
2.1100E+02	6.9498E+00	1.46955E-03	5.57800E-05	8.20910E-01
2.1300E+02	6.8184E+00	1.51605E-03	5.65800E-05	8.23942E-01
2.1500E+02	6.6908E+00	1.47645E-03	5.59000E-05	8.26895E-01
2.1700E+02	6.5668E+00	1.43410E-03	5.51650E-05	8.29763E-01
2.1900E+02	6.4461E+00	1.41565E-03	5.48450E-05	8.32594E-01
2.2100E+02	6.3288E+00	1.43505E-03	5.51850E-05	8.35464E-01
2.2300E+02	6.2147E+00	1.37695E-03	5.41600E-05	8.38218E-01
2.2500E+02	6.1036E+00	1.24740E-03	5.18050E-05	8.40713E-01

2.2700E+02	5.9955E+00	1.22265E-03	5.13400E-05	8.43158E-01
2.2900E+02	5.8903E+00	1.28105E-03	5.24250E-05	8.45720E-01
2.3100E+02	5.7878E+00	1.18090E-03	5.05500E-05	8.48082E-01
2.3300E+02	5.6879E+00	1.17310E-03	5.04000E-05	8.50428E-01
2.3500E+02	5.5907E+00	1.14610E-03	4.98835E-05	8.52720E-01
2.3700E+02	5.4959E+00	1.12395E-03	4.94540E-05	8.54968E-01
2.3900E+02	5.4035E+00	1.09245E-03	4.88360E-05	8.57153E-01
2.4100E+02	5.3134E+00	1.12400E-03	4.94540E-05	8.59401E-01
2.4300E+02	5.2256E+00	1.14415E-03	4.98455E-05	8.61690E-01
2.4500E+02	5.1399E+00	1.05065E-03	4.80045E-05	8.63791E-01
2.4700E+02	5.0564E+00	1.14805E-03	4.99205E-05	8.66087E-01
2.4900E+02	4.9748E+00	1.08125E-03	4.86145E-05	8.68249E-01
2.5100E+02	4.8952E+00	1.01565E-03	4.72965E-05	8.70281E-01
2.5300E+02	4.8175E+00	9.48350E-04	4.59050E-05	8.72177E-01
2.5500E+02	4.7417E+00	1.08310E-03	4.86515E-05	8.74344E-01
2.5700E+02	4.6676E+00	9.80900E-04	4.65825E-05	8.76305E-01
2.5900E+02	4.5953E+00	1.00715E-03	4.71225E-05	8.78320E-01
2.6100E+02	4.5246E+00	9.38250E-04	4.56920E-05	8.80196E-01
2.6300E+02	4.4556E+00	9.58950E-04	4.61270E-05	8.82114E-01
2.6500E+02	4.3881E+00	9.32650E-04	4.55735E-05	8.83979E-01
2.6700E+02	4.3222E+00	9.22150E-04	4.53520E-05	8.85824E-01
2.6900E+02	4.2577E+00	8.52600E-04	4.38485E-05	8.87529E-01
2.7100E+02	4.1947E+00	9.59050E-04	4.61295E-05	8.89447E-01
2.7300E+02	4.1330E+00	9.02350E-04	4.49290E-05	8.91252E-01
2.7500E+02	4.0728E+00	9.32700E-04	4.55750E-05	8.93117E-01
2.7700E+02	4.0138E+00	9.22400E-04	4.53570E-05	8.94962E-01
2.7900E+02	3.9561E+00	9.61900E-04	4.61890E-05	8.96886E-01
2.8100E+02	3.8996E+00	9.65750E-04	4.62690E-05	8.98817E-01
2.8300E+02	3.8443E+00	9.40000E-04	4.57295E-05	9.00697E-01
2.8500E+02	3.7903E+00	8.64850E-04	4.41170E-05	9.02427E-01
2.8700E+02	3.7373E+00	8.47500E-04	4.37370E-05	9.04122E-01
2.8900E+02	3.6854E+00	8.02600E-04	4.27365E-05	9.05727E-01
2.9100E+02	3.6347E+00	8.20250E-04	4.31320E-05	9.07368E-01
2.9300E+02	3.5849E+00	8.29300E-04	4.33340E-05	9.09026E-01
2.9500E+02	3.5362E+00	7.44950E-04	4.14155E-05	9.10516E-01
2.9700E+02	3.4885E+00	7.06800E-04	4.05180E-05	9.11930E-01
2.9900E+02	3.4417E+00	7.05800E-04	4.04945E-05	9.13341E-01
3.0100E+02	3.3959E+00	8.12600E-04	4.29615E-05	9.14967E-01
3.0300E+02	3.3510E+00	7.60500E-04	4.17755E-05	9.16488E-01
3.0500E+02	3.3069E+00	6.81400E-04	3.99100E-05	9.17850E-01
3.0700E+02	3.2638E+00	6.49550E-04	3.91340E-05	9.19149E-01
3.0900E+02	3.2214E+00	6.69850E-04	3.96300E-05	9.20489E-01
3.1100E+02	3.1799E+00	7.11450E-04	4.06285E-05	9.21912E-01
3.1300E+02	3.1392E+00	6.78000E-04	3.98275E-05	9.23268E-01
3.1500E+02	3.0993E+00	6.94900E-04	4.02350E-05	9.24658E-01
3.1700E+02	3.0601E+00	7.20900E-04	4.08525E-05	9.26100E-01
3.1900E+02	3.0217E+00	6.16700E-04	3.83165E-05	9.27333E-01
3.2100E+02	2.9840E+00	6.30500E-04	3.86615E-05	9.28594E-01

3.2300E+02	2.9469E+00	6.67650E-04	3.95760E-05	9.29929E-01
3.2500E+02	2.9106E+00	5.91450E-04	3.76750E-05	9.31112E-01
3.2700E+02	2.8750E+00	5.74250E-04	3.72325E-05	9.32261E-01
3.2900E+02	2.8399E+00	5.90850E-04	3.76605E-05	9.33442E-01
3.3100E+02	2.8056E+00	5.69100E-04	3.71000E-05	9.34581E-01
3.3300E+02	2.7718E+00	5.68600E-04	3.70865E-05	9.35718E-01
3.3500E+02	2.7387E+00	5.23750E-04	3.59020E-05	9.36765E-01
3.3700E+02	2.7061E+00	5.30650E-04	3.60870E-05	9.37827E-01
3.3900E+02	2.6742E+00	5.61500E-04	3.69015E-05	9.38950E-01
3.4100E+02	2.6428E+00	5.50500E-04	3.66135E-05	9.40051E-01
3.4300E+02	2.6119E+00	5.67150E-04	3.70490E-05	9.41185E-01
3.4500E+02	2.5816E+00	5.74950E-04	3.72510E-05	9.42335E-01
3.4700E+02	2.5518E+00	5.98800E-04	3.78625E-05	9.43532E-01
3.4900E+02	2.5225E+00	6.11500E-04	3.81855E-05	9.44755E-01
3.5100E+02	2.4937E+00	6.60150E-04	3.93935E-05	9.46076E-01
3.5300E+02	2.4654E+00	6.63200E-04	3.94680E-05	9.47402E-01
3.5500E+02	2.4376E+00	6.29550E-04	3.86380E-05	9.48661E-01
3.5700E+02	2.4103E+00	6.90700E-04	4.01335E-05	9.50043E-01
3.5900E+02	2.3834E+00	6.33550E-04	3.87375E-05	9.51310E-01
3.6100E+02	2.3570E+00	6.41100E-04	3.89250E-05	9.52592E-01
3.6300E+02	2.3310E+00	6.43200E-04	3.89760E-05	9.53878E-01
3.6500E+02	2.3054E+00	6.87850E-04	4.00655E-05	9.55254E-01
3.6700E+02	2.2803E+00	6.04300E-04	3.80035E-05	9.56463E-01
3.6900E+02	2.2555E+00	6.17500E-04	3.83355E-05	9.57698E-01
3.7100E+02	2.2312E+00	5.85750E-04	3.75295E-05	9.58869E-01
3.7300E+02	2.2072E+00	5.96400E-04	3.78020E-05	9.60062E-01
3.7500E+02	2.1837E+00	6.65500E-04	3.95245E-05	9.61393E-01
3.7700E+02	2.1605E+00	5.81600E-04	3.74235E-05	9.62556E-01
3.7900E+02	2.1377E+00	5.88400E-04	3.75975E-05	9.63733E-01
3.8100E+02	2.1152E+00	5.34150E-04	3.61800E-05	9.64801E-01
3.8300E+02	2.0931E+00	6.00850E-04	3.79150E-05	9.66003E-01
3.8500E+02	2.0713E+00	5.42650E-04	3.64060E-05	9.67088E-01
3.8700E+02	2.0499E+00	5.18100E-04	3.57505E-05	9.68124E-01
3.8900E+02	2.0288E+00	5.35950E-04	3.62290E-05	9.69196E-01
3.9100E+02	2.0080E+00	5.15400E-04	3.56775E-05	9.70227E-01
3.9300E+02	1.9876E+00	4.62700E-04	3.42250E-05	9.71153E-01
3.9500E+02	1.9675E+00	4.30970E-04	3.33195E-05	9.72014E-01
3.9700E+02	1.9476E+00	4.17085E-04	3.29155E-05	9.72849E-01
3.9900E+02	1.9281E+00	4.23930E-04	3.31150E-05	9.73697E-01
4.0100E+02	1.9088E+00	4.37600E-04	3.35105E-05	9.74572E-01
4.0300E+02	1.8899E+00	3.78425E-04	3.17635E-05	9.75329E-01
4.0500E+02	1.8712E+00	2.94925E-04	2.91205E-05	9.75918E-01
4.0700E+02	1.8528E+00	3.81995E-04	3.18715E-05	9.76682E-01
4.0900E+02	1.8347E+00	3.11450E-04	2.96625E-05	9.77305E-01

Carbon 0.5 m. f. p.

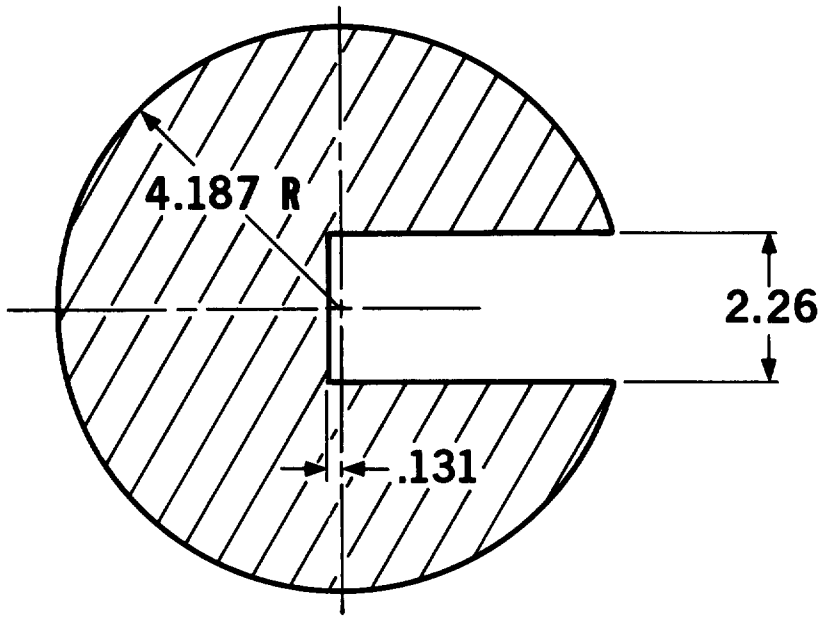

All Dimensions in Centimeters

Mass = 542 grams

99.995 % C

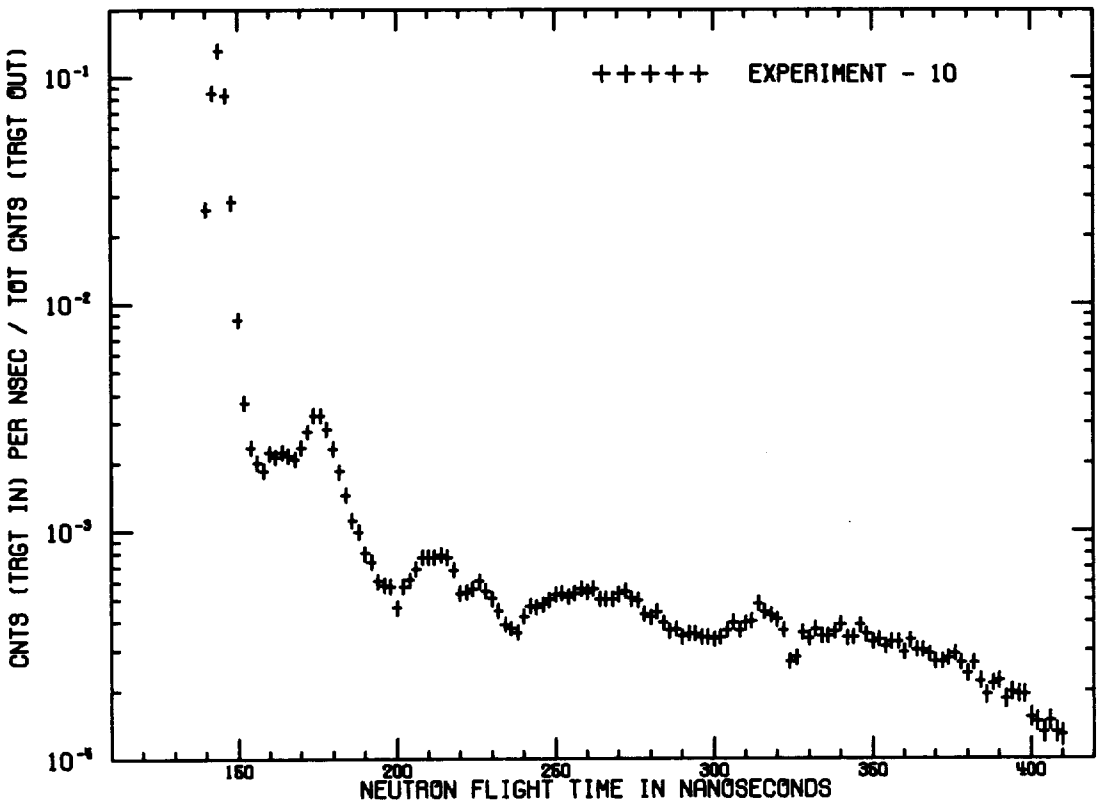

CARBON - 0.5 M.F.P. - 30 DEG.

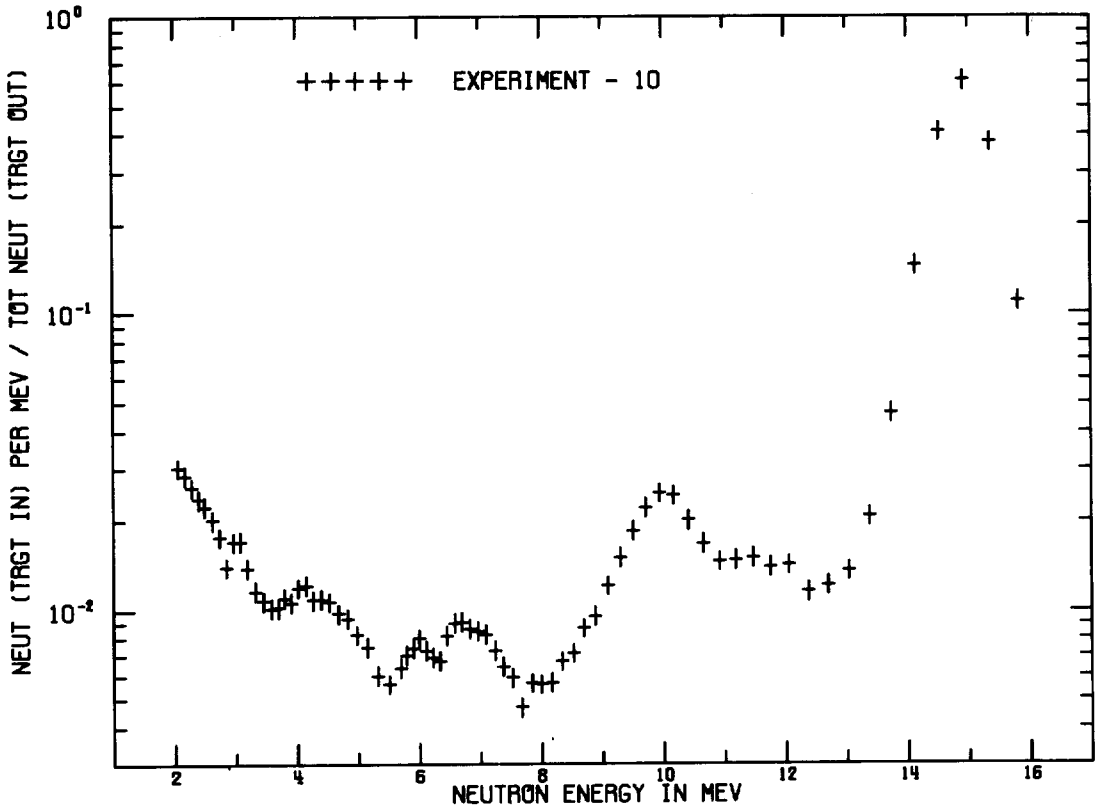

CARBON - 0.5 M.F.P. - 30 DEG.

CARBON - 0.5 M.F.P. - 30 DEG.
FLIGHTPATH = 766.00 CM DETECTOR = NE213 FWHM = 4 NS

TIME(NS)	CALCULATED ENERGY(MEV)	CNT/NS/SOURCE	ERROR	INTEGRAL
1.3900E+02	1.6285E+01	3.31460E-03	6.47350E-05	6.62920E-03
1.4100E+02	1.5815E+01	2.61385E-02	1.81665E-04	5.89062E-02
1.4300E+02	1.5365E+01	8.53050E-02	3.28170E-04	2.29516E-01
1.4500E+02	1.4934E+01	1.31140E-01	4.06885E-04	4.91796E-01
1.4700E+02	1.4521E+01	8.36000E-02	3.24870E-04	6.58996E-01
1.4900E+02	1.4125E+01	2.82165E-02	1.88745E-04	7.15429E-01
1.5100E+02	1.3745E+01	8.55050E-03	1.03925E-04	7.32530E-01
1.5300E+02	1.3380E+01	3.67460E-03	6.81550E-05	7.39879E-01
1.5500E+02	1.3030E+01	2.31975E-03	5.41750E-05	7.44519E-01
1.5700E+02	1.2693E+01	1.99860E-03	5.02950E-05	7.48516E-01
1.5900E+02	1.2370E+01	1.84655E-03	4.83470E-05	7.52209E-01
1.6100E+02	1.2058E+01	2.20655E-03	5.28400E-05	7.56622E-01
1.6300E+02	1.1759E+01	2.11830E-03	5.17750E-05	7.60859E-01
1.6500E+02	1.1470E+01	2.22955E-03	5.31150E-05	7.65318E-01
1.6700E+02	1.1192E+01	2.13685E-03	5.20000E-05	7.69592E-01
1.6900E+02	1.0924E+01	2.06950E-03	5.11750E-05	7.73731E-01
1.7100E+02	1.0666E+01	2.32845E-03	5.42750E-05	7.78388E-01
1.7300E+02	1.0417E+01	2.72750E-03	5.87300E-05	7.83843E-01
1.7500E+02	1.0176E+01	3.22745E-03	6.38800E-05	7.90297E-01
1.7700E+02	9.9438E+00	3.21785E-03	6.37850E-05	7.96733E-01
1.7900E+02	9.7194E+00	2.81590E-03	5.96750E-05	8.02365E-01
1.8100E+02	9.5025E+00	2.29700E-03	5.39100E-05	8.06959E-01
1.8300E+02	9.2929E+00	1.82845E-03	4.81100E-05	8.10616E-01
1.8500E+02	9.0901E+00	1.43950E-03	4.27030E-05	8.13495E-01
1.8700E+02	8.8939E+00	1.11525E-03	3.76065E-05	8.15725E-01
1.8900E+02	8.7041E+00	9.91650E-04	3.54720E-05	8.17709E-01
1.9100E+02	8.5203E+00	7.98800E-04	3.18560E-05	8.19306E-01
1.9300E+02	8.3423E+00	7.30700E-04	3.04765E-05	8.20768E-01
1.9500E+02	8.1698E+00	6.03000E-04	2.77060E-05	8.21974E-01
1.9700E+02	8.0026E+00	5.79950E-04	2.71755E-05	8.23134E-01
1.9900E+02	7.8406E+00	5.70250E-04	2.69495E-05	8.24274E-01
2.0100E+02	7.6834E+00	4.60725E-04	2.42495E-05	8.25196E-01
2.0300E+02	7.5310E+00	5.72250E-04	2.69960E-05	8.26340E-01
2.0500E+02	7.3830E+00	6.10300E-04	2.78725E-05	8.27561E-01
2.0700E+02	7.2394E+00	6.81900E-04	2.94490E-05	8.28924E-01
2.0900E+02	7.0999E+00	7.64800E-04	3.11750E-05	8.30454E-01
2.1100E+02	6.9645E+00	7.67650E-04	3.12325E-05	8.31989E-01
2.1300E+02	6.8329E+00	7.64050E-04	3.11595E-05	8.33517E-01
2.1500E+02	6.7050E+00	7.86200E-04	3.16050E-05	8.35090E-01
2.1700E+02	6.5807E+00	7.63050E-04	3.11395E-05	8.36616E-01
2.1900E+02	6.4598E+00	6.73550E-04	2.92700E-05	8.37963E-01
2.2100E+02	6.3422E+00	5.32650E-04	2.60540E-05	8.39028E-01
2.2300E+02	6.2278E+00	5.39600E-04	2.62220E-05	8.40108E-01
2.2500E+02	6.1165E+00	5.58950E-04	2.66845E-05	8.41225E-01
2.2700E+02	6.0082E+00	6.02200E-04	2.76880E-05	8.42430E-01

2.2900E+02	5.9027E+00	5.44700E-04	2.63445E-05	8.43519E-01
2.3100E+02	5.8000E+00	5.06200E-04	2.54050E-05	8.44532E-01
2.3300E+02	5.6999E+00	4.47670E-04	2.39075E-05	8.45427E-01
2.3500E+02	5.6025E+00	3.88465E-04	2.22895E-05	8.46204E-01
2.3700E+02	5.5075E+00	3.73595E-04	2.18640E-05	8.46951E-01
2.3900E+02	5.4149E+00	3.58210E-04	2.14155E-05	8.47668E-01
2.4100E+02	5.3246E+00	4.22000E-04	2.32195E-05	8.48512E-01
2.4300E+02	5.2366E+00	4.68470E-04	2.44500E-05	8.49448E-01
2.4500E+02	5.1508E+00	4.63860E-04	2.43310E-05	8.50376E-01
2.4700E+02	5.0670E+00	4.76935E-04	2.46680E-05	8.51330E-01
2.4900E+02	4.9853E+00	5.00350E-04	2.52595E-05	8.52331E-01
2.5100E+02	4.9056E+00	5.28200E-04	2.59465E-05	8.53387E-01
2.5300E+02	4.8277E+00	5.31150E-04	2.60180E-05	8.54449E-01
2.5500E+02	4.7517E+00	5.15400E-04	2.56330E-05	8.55480E-01
2.5700E+02	4.6775E+00	5.34650E-04	2.61035E-05	8.56550E-01
2.5900E+02	4.6050E+00	5.58000E-04	2.66615E-05	8.57666E-01
2.6100E+02	4.5342E+00	5.38250E-04	2.61905E-05	8.58742E-01
2.6300E+02	4.4650E+00	5.59150E-04	2.66890E-05	8.59860E-01
2.6500E+02	4.3974E+00	5.02500E-04	2.53130E-05	8.60865E-01
2.6700E+02	4.3313E+00	5.04800E-04	2.53705E-05	8.61875E-01
2.6900E+02	4.2667E+00	5.00700E-04	2.52680E-05	8.62876E-01
2.7100E+02	4.2035E+00	5.29350E-04	2.59745E-05	8.63935E-01
2.7300E+02	4.1417E+00	5.47350E-04	2.64085E-05	8.65030E-01
2.7500E+02	4.0813E+00	5.06100E-04	2.54035E-05	8.66042E-01
2.7700E+02	4.0222E+00	4.98460E-04	2.52125E-05	8.67039E-01
2.7900E+02	3.9644E+00	4.32875E-04	2.35135E-05	8.67905E-01
2.8100E+02	3.9078E+00	4.19400E-04	2.31490E-05	8.68743E-01
2.8300E+02	3.8524E+00	4.43290E-04	2.37915E-05	8.69630E-01
2.8500E+02	3.7982E+00	3.95765E-04	2.24950E-05	8.70422E-01
2.8700E+02	3.7452E+00	3.64715E-04	2.16065E-05	8.71151E-01
2.8900E+02	3.6932E+00	3.71895E-04	2.18150E-05	8.71895E-01
2.9100E+02	3.6423E+00	3.43495E-04	2.09775E-05	8.72582E-01
2.9300E+02	3.5925E+00	3.55610E-04	2.13390E-05	8.73293E-01
2.9500E+02	3.5437E+00	3.53580E-04	2.12785E-05	8.74000E-01
2.9700E+02	3.4958E+00	3.42880E-04	2.09590E-05	8.74686E-01
2.9900E+02	3.4490E+00	3.41580E-04	2.09195E-05	8.75369E-01
3.0100E+02	3.4030E+00	3.36070E-04	2.07525E-05	8.76041E-01
3.0300E+02	3.3580E+00	3.43170E-04	2.09675E-05	8.76728E-01
3.0500E+02	3.3139E+00	3.65425E-04	2.16270E-05	8.77458E-01
3.0700E+02	3.2706E+00	3.99215E-04	2.25915E-05	8.78257E-01
3.0900E+02	3.2282E+00	3.66180E-04	2.16490E-05	8.78989E-01
3.1100E+02	3.1866E+00	3.95740E-04	2.24945E-05	8.79781E-01
3.1300E+02	3.1458E+00	4.03575E-04	2.27130E-05	8.80588E-01
3.1500E+02	3.1058E+00	4.78980E-04	2.47200E-05	8.81546E-01
3.1700E+02	3.0665E+00	4.41050E-04	2.37320E-05	8.82428E-01
3.1900E+02	3.0280E+00	4.25150E-04	2.33050E-05	8.83278E-01
3.2100E+02	2.9902E+00	4.09525E-04	2.28780E-05	8.84097E-01
3.2300E+02	2.9531E+00	3.65770E-04	2.16370E-05	8.84829E-01

3.2500E+02	2.9167E+00	2.66645E-04	1.85210E-05	8.85362E-01
3.2700E+02	2.8810E+00	2.78545E-04	1.89225E-05	8.85919E-01
3.2900E+02	2.8459E+00	3.59425E-04	2.14515E-05	8.86638E-01
3.3100E+02	2.8115E+00	3.36395E-04	2.07625E-05	8.87311E-01
3.3300E+02	2.7777E+00	3.71095E-04	2.17920E-05	8.88053E-01
3.3500E+02	2.7444E+00	3.47300E-04	2.10915E-05	8.88748E-01
3.3700E+02	2.7118E+00	3.45925E-04	2.10505E-05	8.89439E-01
3.3900E+02	2.6798E+00	3.61460E-04	2.15110E-05	3.90162E-01
3.4100E+02	2.6483E+00	3.89060E-04	2.23065E-05	8.90940E-01
3.4300E+02	2.6174E+00	3.40025E-04	2.08725E-05	8.91620E-01
3.4500E+02	2.5870E+00	3.40500E-04	2.08870E-05	8.92301E-01
3.4700E+02	2.5571E+00	3.86250E-04	2.22265E-05	8.93074E-01
3.4900E+02	2.5278E+00	3.52335E-04	2.12415E-05	8.93779E-01
3.5100E+02	2.4990E+00	3.26440E-04	2.04580E-05	8.94432E-01
3.5300E+02	2.4706E+00	3.32565E-04	2.06460E-05	8.95097E-01
3.5500E+02	2.4427E+00	3.11335E-04	1.99865E-05	8.95719E-01
3.5700E+02	2.4153E+00	3.26960E-04	2.04740E-05	8.96373E-01
3.5900E+02	2.3884E+00	3.26520E-04	2.04600E-05	8.97026E-01
3.6100E+02	2.3619E+00	2.94130E-04	1.94355E-05	8.97615E-01
3.6300E+02	2.3359E+00	3.32020E-04	2.06290E-05	8.98279E-01
3.6500E+02	2.3102E+00	3.00060E-04	1.96270E-05	8.98879E-01
3.6700E+02	2.2850E+00	3.01885E-04	1.96855E-05	8.99482E-01
3.6900E+02	2.2602E+00	2.88365E-04	1.92475E-05	9.00059E-01
3.7100E+02	2.2359E+00	2.66680E-04	1.85225E-05	9.00593E-01
3.7300E+02	2.2119E+00	2.67940E-04	1.85655E-05	9.01128E-01
3.7500E+02	2.1882E+00	2.75940E-04	1.88355E-05	9.01680E-01
3.7700E+02	2.1650E+00	2.89745E-04	1.92925E-05	9.02260E-01
3.7900E+02	2.1421E+00	2.63630E-04	1.84185E-05	9.02787E-01
3.8100E+02	2.1196E+00	2.36285E-04	1.74560E-05	9.03260E-01
3.8300E+02	2.0975E+00	2.64765E-04	1.84570E-05	9.03789E-01
3.8500E+02	2.0757E+00	2.19870E-04	1.68520E-05	9.04229E-01
3.8700E+02	2.0542E+00	1.91785E-04	1.57650E-05	9.04613E-01
3.8900E+02	2.0331E+00	2.15030E-04	1.66695E-05	9.05043E-01
3.9100E+02	2.0123E+00	2.20580E-04	1.68785E-05	9.05484E-01
3.9300E+02	1.9918E+00	1.83115E-04	1.54140E-05	9.05850E-01
3.9500E+02	1.9716E+00	1.97250E-04	1.59825E-05	9.06244E-01
3.9700E+02	1.9517E+00	1.92185E-04	1.57810E-05	9.06629E-01
3.9900E+02	1.9321E+00	1.93315E-04	1.58265E-05	9.07015E-01
4.0100E+02	1.9128E+00	1.52805E-04	1.41185E-05	9.07321E-01
4.0300E+02	1.8938E+00	1.46125E-04	1.38165E-05	9.07613E-01
4.0500E+02	1.8751E+00	1.31575E-04	1.31350E-05	9.07876E-01
4.0700E+02	1.8567E+00	1.47155E-04	1.38635E-05	9.08171E-01
4.0900E+02	1.8385E+00	1.30920E-04	1.31035E-05	9.08433E-01
4.1100E+02	1.8206E+00	1.27165E-04	1.29215E-05	9.08687E-01

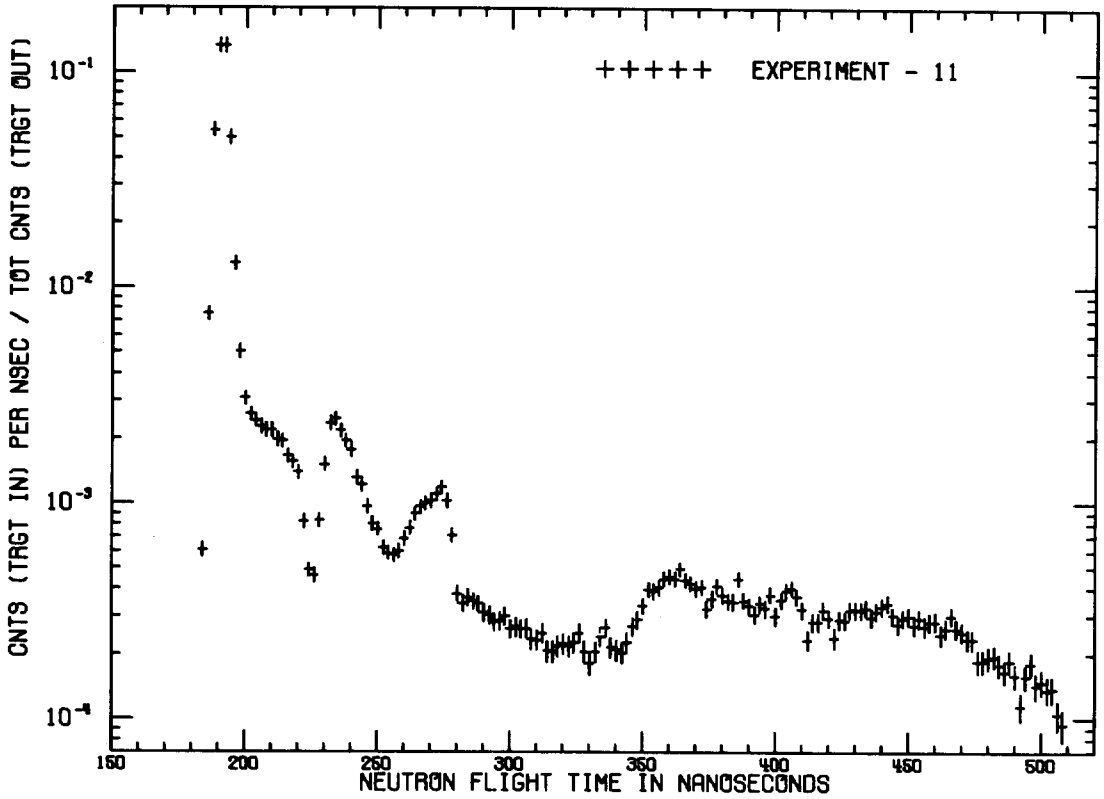

CARBON - 0.5 M.F.P. - 120 DEG.

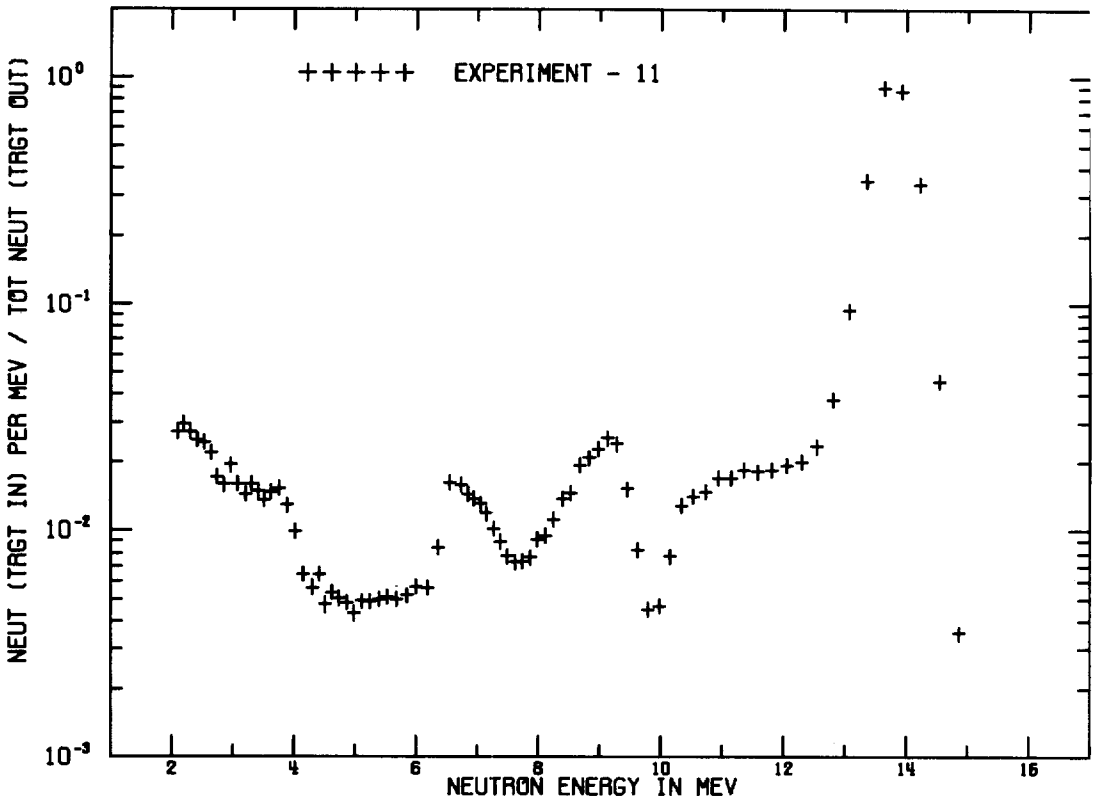

CARBON - 0.5 M.F.P. - 120 DEG.

CARBON - 0.5 M.F.P. - 120 DEG.
FLIGHTPATH = 975.20 CM DETECTOR = NE213 FWHM = 4 NS

TIME(NS)	CALCULATED ENERGY(MEV)	CNT/NS/SOURCE	ERROR	INTEGRAL
1.8300E+02	1.5203E+01	8.54150E-05	1.48175E-05	1.70830E-04
1.8500E+02	1.4868E+01	6.04500E-04	3.77115E-05	1.37983E-03
1.8700E+02	1.4544E+01	7.54350E-03	1.32280E-04	1.64668E-02
1.8900E+02	1.4231E+01	5.37800E-02	3.52995E-04	1.24027E-01
1.9100E+02	1.3928E+01	1.33765E-01	5.56700E-04	3.91557E-01
1.9300E+02	1.3634E+01	1.33225E-01	5.55550E-04	6.58007E-01
1.9500E+02	1.3350E+01	4.99305E-02	3.40140E-04	7.57868E-01
1.9700E+02	1.3075E+01	1.29020E-02	1.72950E-04	7.83672E-01
1.9900E+02	1.2808E+01	5.04550E-03	1.08215E-04	7.93763E-01
2.0100E+02	1.2549E+01	3.07090E-03	8.44750E-05	7.99905E-01
2.0300E+02	1.2298E+01	2.57315E-03	7.73500E-05	8.05051E-01
2.0500E+02	1.2055E+01	2.41270E-03	7.49050E-05	8.09876E-01
2.0700E+02	1.1819E+01	2.26020E-03	7.25100E-05	8.14397E-01
2.0900E+02	1.1589E+01	2.17680E-03	7.11650E-05	8.18750E-01
2.1100E+02	1.1367E+01	2.18160E-03	7.12450E-05	8.23114E-01
2.1300E+02	1.1150E+01	1.97995E-03	6.78850E-05	8.27073E-01
2.1500E+02	1.0940E+01	1.94260E-03	6.72450E-05	8.30959E-01
2.1700E+02	1.0736E+01	1.65130E-03	6.20250E-05	8.34261E-01
2.1900E+02	1.0538E+01	1.55695E-03	6.02400E-05	8.37375E-01
2.2100E+02	1.0345E+01	1.39015E-03	5.69400E-05	8.40155E-01
2.2300E+02	1.0157E+01	8.22450E-04	4.38980E-05	8.41800E-01
2.2500E+02	9.9743E+00	4.87205E-04	3.39170E-05	8.42775E-01
2.2700E+02	9.7966E+00	4.61375E-04	3.30230E-05	8.43697E-01
2.2900E+02	9.6236E+00	8.30300E-04	4.41050E-05	8.45358E-01
2.3100E+02	9.4551E+00	1.51240E-03	5.93750E-05	8.48383E-01
2.3300E+02	9.2911E+00	2.34790E-03	7.39000E-05	8.53079E-01
2.3500E+02	9.1313E+00	2.44700E-03	7.54350E-05	8.57973E-01
2.3700E+02	8.9757E+00	2.16300E-03	7.09400E-05	8.62299E-01
2.3900E+02	8.8240E+00	1.94565E-03	6.73000E-05	8.66190E-01
2.4100E+02	8.6761E+00	1.77215E-03	6.42450E-05	8.69734E-01
2.4300E+02	8.5319E+00	1.31420E-03	5.53750E-05	8.72363E-01
2.4500E+02	8.3913E+00	1.22080E-03	5.33850E-05	8.74804E-01
2.4700E+02	8.2542E+00	9.69550E-04	4.76215E-05	8.76743E-01
2.4900E+02	8.1204E+00	8.04000E-04	4.34090E-05	8.78351E-01
2.5100E+02	7.9899E+00	7.58400E-04	4.21740E-05	8.79868E-01
2.5300E+02	7.8625E+00	6.22150E-04	3.82490E-05	8.81112E-01
2.5500E+02	7.7381E+00	5.85350E-04	3.71175E-05	8.82283E-01
2.5700E+02	7.6167E+00	5.74350E-04	3.67730E-05	8.83432E-01
2.5900E+02	7.4981E+00	5.99550E-04	3.75580E-05	8.84631E-01
2.6100E+02	7.3822E+00	6.85000E-04	4.01080E-05	8.86001E-01
2.6300E+02	7.2691E+00	7.67750E-04	4.24300E-05	8.87536E-01
2.6500E+02	7.1585E+00	8.92300E-04	4.57035E-05	8.89321E-01
2.6700E+02	7.0505E+00	9.64200E-04	4.74915E-05	8.91249E-01
2.6900E+02	6.9449E+00	9.99650E-04	4.83480E-05	8.93249E-01
2.7100E+02	6.8416E+00	1.02725E-03	4.90050E-05	8.95303E-01

2.7300E+02	6.7407E+00	1.10405E-03	5.07900E-05	8.97511E-01
2.7500E+02	6.6419E+00	1.18710E-03	5.26500E-05	8.99886E-01
2.7700E+02	6.5454E+00	1.02920E-03	4.90505E-05	9.01944E-01
2.7900E+02	6.4509E+00	7.10500E-04	4.08375E-05	9.03365E-01
2.8100E+02	6.3585E+00	3.80600E-04	3.00565E-05	9.04126E-01
2.8300E+02	6.2680E+00	3.43930E-04	2.86085E-05	9.04814E-01
2.8500E+02	6.1795E+00	3.65705E-04	2.94770E-05	9.05545E-01
2.8700E+02	6.0928E+00	3.50550E-04	2.88755E-05	9.06247E-01
2.8900E+02	6.0080E+00	3.42575E-04	2.85535E-05	9.06932E-01
2.9100E+02	5.9249E+00	3.10465E-04	2.72200E-05	9.07553E-01
2.9300E+02	5.8435E+00	3.02110E-04	2.68620E-05	9.08157E-01
2.9500E+02	5.7638E+00	2.81175E-04	2.59435E-05	9.08719E-01
2.9700E+02	5.6858E+00	2.84880E-04	2.61085E-05	9.09289E-01
2.9900E+02	5.6093E+00	2.98420E-04	2.67025E-05	9.09886E-01
3.0100E+02	5.5343E+00	2.61640E-04	2.50560E-05	9.10409E-01
3.0300E+02	5.4609E+00	2.66660E-04	2.52875E-05	9.10942E-01
3.0500E+02	5.3889E+00	2.61545E-04	2.50515E-05	9.11465E-01
3.0700E+02	5.3183E+00	2.62830E-04	2.51110E-05	9.11991E-01
3.0900E+02	5.2491E+00	2.34255E-04	2.37565E-05	9.12460E-01
3.1100E+02	5.1812E+00	2.32625E-04	2.36770E-05	9.12925E-01
3.1300E+02	5.1147E+00	2.49990E-04	2.45120E-05	9.13425E-01
3.1500E+02	5.0494E+00	2.05835E-04	2.23280E-05	9.13837E-01
3.1700E+02	4.9854E+00	2.04890E-04	2.22785E-05	9.14246E-01
3.1900E+02	4.9226E+00	2.18405E-04	2.29710E-05	9.14683E-01
3.2100E+02	4.8610E+00	2.21955E-04	2.31490E-05	9.15127E-01
3.2300E+02	4.8005E+00	2.18110E-04	2.29560E-05	9.15563E-01
3.2500E+02	4.7412E+00	2.25440E-04	2.33230E-05	9.16014E-01
3.2700E+02	4.6829E+00	2.48945E-04	2.44625E-05	9.16512E-01
3.2900E+02	4.6257E+00	2.04720E-04	2.22700E-05	9.16921E-01
3.3100E+02	4.5696E+00	1.81195E-04	2.10110E-05	9.17284E-01
3.3300E+02	4.5145E+00	2.04200E-04	2.22430E-05	9.17692E-01
3.3500E+02	4.4603E+00	2.40510E-04	2.40595E-05	9.18173E-01
3.3700E+02	4.4072E+00	2.64155E-04	2.51720E-05	9.18702E-01
3.3900E+02	4.3550E+00	2.15155E-04	2.28065E-05	9.19132E-01
3.4100E+02	4.3037E+00	2.08480E-04	2.24645E-05	9.19549E-01
3.4300E+02	4.2533E+00	2.02530E-04	2.21555E-05	9.19954E-01
3.4500E+02	4.2038E+00	2.26120E-04	2.33565E-05	9.20406E-01
3.4700E+02	4.1552E+00	2.67300E-04	2.53165E-05	9.20941E-01
3.4900E+02	4.1074E+00	2.86905E-04	2.61980E-05	9.21515E-01
3.5100E+02	4.0604E+00	3.33645E-04	2.81890E-05	9.22182E-01
3.5300E+02	4.0142E+00	3.98860E-04	3.07525E-05	9.22980E-01
3.5500E+02	3.9688E+00	3.92960E-04	3.05295E-05	9.23766E-01
3.5700E+02	3.9242E+00	4.06755E-04	3.10485E-05	9.24579E-01
3.5900E+02	3.8803E+00	4.44435E-04	3.24235E-05	9.25468E-01
3.6100E+02	3.8372E+00	4.56475E-04	3.28510E-05	9.26381E-01
3.6300E+02	3.7948E+00	4.43090E-04	3.23755E-05	9.27267E-01
3.6500E+02	3.7531E+00	4.93335E-04	3.41260E-05	9.28254E-01
3.6700E+02	3.7120E+00	4.37435E-04	3.21725E-05	9.29129E-01

3.6900E+02	3.6717E+00	4.25020E-04	3.17225E-05	9.29979E-01
3.7100E+02	3.6319E+00	4.00805E-04	3.08255E-05	9.30780E-01
3.7300E+02	3.5929E+00	4.08055E-04	3.10965E-05	9.31596E-01
3.7500E+02	3.5544E+00	3.24360E-04	2.78050E-05	9.32245E-01
3.7700E+02	3.5166E+00	3.60990E-04	2.92910E-05	9.32967E-01
3.7900E+02	3.4794E+00	4.14110E-04	3.13215E-05	9.33795E-01
3.8100E+02	3.4428E+00	3.72960E-04	2.97610E-05	9.34541E-01
3.8300E+02	3.4067E+00	3.50395E-04	2.88690E-05	9.35242E-01
3.8500E+02	3.3712E+00	3.47800E-04	2.87650E-05	9.35938E-01
3.8700E+02	3.3363E+00	4.45115E-04	3.24480E-05	9.36828E-01
3.8900E+02	3.3019E+00	3.53430E-04	2.89905E-05	9.37535E-01
3.9100E+02	3.2680E+00	3.32980E-04	2.81620E-05	9.38201E-01
3.9300E+02	3.2346E+00	3.04750E-04	2.69755E-05	9.38810E-01
3.9500E+02	3.2018E+00	3.40880E-04	2.84850E-05	9.39492E-01
3.9700E+02	3.1695E+00	3.25325E-04	2.78450E-05	9.40143E-01
3.9900E+02	3.1376E+00	3.75720E-04	2.98680E-05	9.40894E-01
4.0100E+02	3.1062E+00	2.98220E-04	2.66935E-05	9.41490E-01
4.0300E+02	3.0753E+00	3.54325E-04	2.90265E-05	9.42199E-01
4.0500E+02	3.0449E+00	3.92045E-04	3.04945E-05	9.42983E-01
4.0700E+02	3.0149E+00	4.03390E-04	3.09225E-05	9.43790E-01
4.0900E+02	2.9853E+00	3.69570E-04	2.96285E-05	9.44529E-01
4.1100E+02	2.9562E+00	3.20795E-04	2.76560E-05	9.45171E-01
4.1300E+02	2.9275E+00	2.32405E-04	2.36660E-05	9.45635E-01
4.1500E+02	2.8992E+00	2.82475E-04	2.60015E-05	9.46200E-01
4.1700E+02	2.8714E+00	2.81310E-04	2.59495E-05	9.46763E-01
4.1900E+02	2.8439E+00	3.18120E-04	2.75435E-05	9.47399E-01
4.2100E+02	2.8168E+00	2.93525E-04	2.64895E-05	9.47986E-01
4.2300E+02	2.7901E+00	2.37020E-04	2.38910E-05	9.48460E-01
4.2500E+02	2.7638E+00	2.88955E-04	2.62885E-05	9.49038E-01
4.2700E+02	2.7379E+00	2.86310E-04	2.61720E-05	9.49611E-01
4.2900E+02	2.7123E+00	3.19300E-04	2.75935E-05	9.50249E-01
4.3100E+02	2.6871E+00	3.21405E-04	2.76815E-05	9.50892E-01
4.3300E+02	2.6622E+00	3.18375E-04	2.75545E-05	9.51529E-01
4.3500E+02	2.6377E+00	3.27770E-04	2.79465E-05	9.52185E-01
4.3700E+02	2.6135E+00	2.95015E-04	2.65545E-05	9.52775E-01
4.3900E+02	2.5896E+00	3.14630E-04	2.73965E-05	9.53404E-01
4.4100E+02	2.5661E+00	3.30350E-04	2.80535E-05	9.54065E-01
4.4300E+02	2.5429E+00	3.44255E-04	2.86220E-05	9.54753E-01
4.4500E+02	2.5200E+00	3.01335E-04	2.68285E-05	9.55356E-01
4.4700E+02	2.4974E+00	2.73350E-04	2.55920E-05	9.55902E-01
4.4900E+02	2.4751E+00	2.92945E-04	2.64640E-05	9.56488E-01
4.5100E+02	2.4531E+00	2.98055E-04	2.66865E-05	9.57084E-01
4.5300E+02	2.4314E+00	2.72960E-04	2.55740E-05	9.57630E-01
4.5500E+02	2.4100E+00	2.91570E-04	2.64035E-05	9.58214E-01
4.5700E+02	2.3889E+00	2.68655E-04	2.53785E-05	9.58751E-01
4.5900E+02	2.3680E+00	2.80515E-04	2.59140E-05	9.59312E-01
4.6100E+02	2.3475E+00	2.82995E-04	2.60245E-05	9.59878E-01
4.6300E+02	2.3271E+00	2.45475E-04	2.42975E-05	9.60369E-01

4.6500E+02	2.3071E+00	2.62195E-04	2.50820E-05	9.60893E-01
4.6700E+02	2.2873E+00	2.99945E-04	2.67685E-05	9.61493E-01
4.6900E+02	2.2678E+00	2.62650E-04	2.51030E-05	9.62018E-01
4.7100E+02	2.2485E+00	2.52975E-04	2.46525E-05	9.62524E-01
4.7300E+02	2.2294E+00	2.34285E-04	2.37580E-05	9.62993E-01
4.7500E+02	2.2106E+00	2.32650E-04	2.36780E-05	9.63458E-01
4.7700E+02	2.1921E+00	1.84835E-04	2.12105E-05	9.63828E-01
4.7900E+02	2.1737E+00	1.84915E-04	2.12145E-05	9.64198E-01
4.8100E+02	2.1556E+00	1.91930E-04	2.15945E-05	9.64582E-01
4.8300E+02	2.1378E+00	1.95060E-04	2.17620E-05	9.64972E-01
4.8500E+02	2.1201E+00	1.79410E-04	2.09120E-05	9.65331E-01
4.8700E+02	2.1027E+00	1.66140E-04	2.01640E-05	9.65663E-01
4.8900E+02	2.0855E+00	1.84860E-04	2.12115E-05	9.66033E-01
4.9100E+02	2.0684E+00	1.59795E-04	1.97960E-05	9.66352E-01
4.9300E+02	2.0516E+00	1.14565E-04	1.69440E-05	9.66581E-01
4.9500E+02	2.0350E+00	1.57420E-04	1.96565E-05	9.66896E-01
4.9700E+02	2.0186E+00	1.80450E-04	2.09695E-05	9.67257E-01
4.9900E+02	2.0024E+00	1.42145E-04	1.87345E-05	9.67541E-01
5.0100E+02	1.9864E+00	1.48930E-04	1.91495E-05	9.67839E-01
5.0300E+02	1.9706E+00	1.36560E-04	1.83860E-05	9.68112E-01
5.0500E+02	1.9550E+00	1.37475E-04	1.84435E-05	9.68387E-01
5.0700E+02	1.9396E+00	1.04740E-04	1.62580E-05	9.68597E-01
5.0900E+02	1.9243E+00	9.37250E-05	1.54535E-05	9.68784E-01

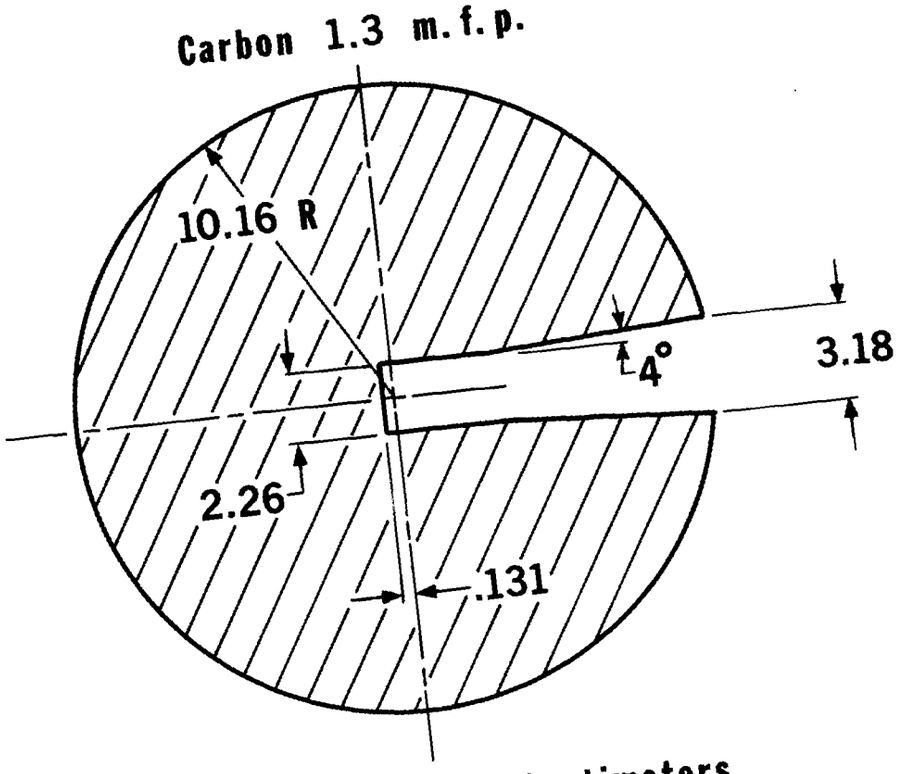

All Dimensions in Centimeters

Mass = 7,656 grams

99.995 % C

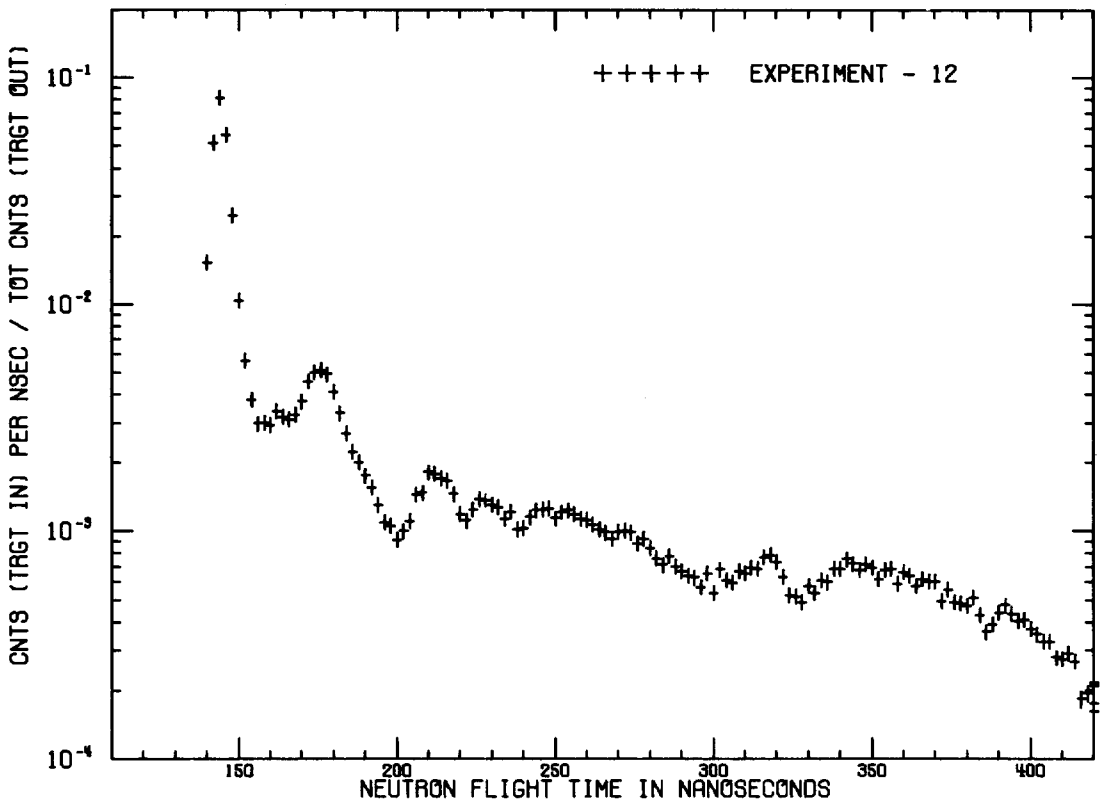

CARBON - 1.3 M.F.P. - 30 DEG.

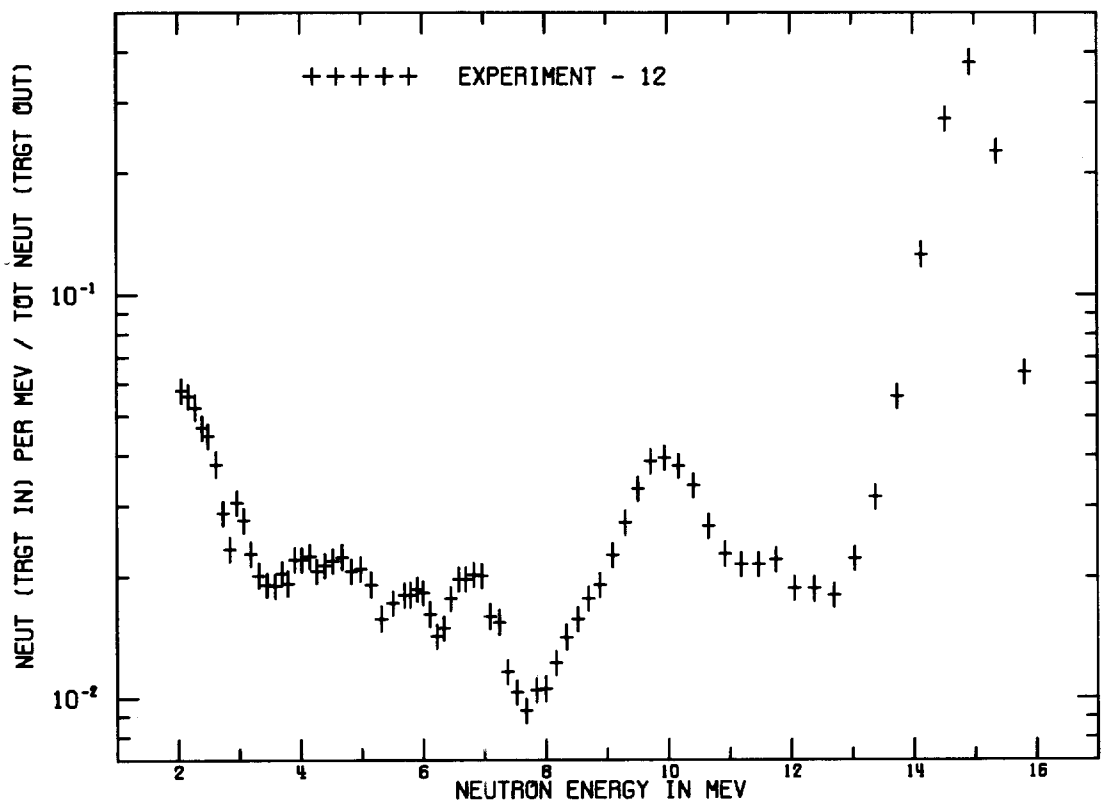

CARBON - 1.3 M.F.P. - 30 DEG.

CARBON - 1.3 M.F.P. - 30 DEG.
FLIGHTPATH = 766.00 CM DETECTOR = NE213 FWHM = 4 NS

TIME(NS)	CALCULATED ENERGY(MEV)	CNT/NS/SOURCE	ERROR	INTEGRAL
1.3900E+02	1.6285E+01	1.19565E-03	3.87460E-05	2.39130E-03
1.4100E+02	1.5815E+01	1.52895E-02	1.38290E-04	3.29703E-02
1.4300E+02	1.5365E+01	5.13600E-02	2.53420E-04	1.35690E-01
1.4500E+02	1.4934E+01	8.13100E-02	3.18855E-04	2.98310E-01
1.4700E+02	1.4521E+01	5.58100E-02	2.64165E-04	4.09930E-01
1.4900E+02	1.4125E+01	2.45640E-02	1.75270E-04	4.59058E-01
1.5100E+02	1.3745E+01	1.03505E-02	1.13790E-04	4.79759E-01
1.5300E+02	1.3380E+01	5.61250E-03	8.38050E-05	4.90984E-01
1.5500E+02	1.3030E+01	3.79270E-03	6.89100E-05	4.98570E-01
1.5700E+02	1.2693E+01	2.97655E-03	6.10550E-05	5.04523E-01
1.5900E+02	1.2370E+01	2.99370E-03	6.12350E-05	5.10510E-01
1.6100E+02	1.2058E+01	2.90985E-03	6.03700E-05	5.16330E-01
1.6300E+02	1.1759E+01	3.35060E-03	6.47750E-05	5.23031E-01
1.6500E+02	1.1470E+01	3.18605E-03	6.31650E-05	5.29403E-01
1.6700E+02	1.1192E+01	3.11140E-03	6.24250E-05	5.35626E-01
1.6900E+02	1.0924E+01	3.23440E-03	6.36400E-05	5.42095E-01
1.7100E+02	1.0666E+01	3.71280E-03	6.81800E-05	5.49520E-01
1.7300E+02	1.0417E+01	4.57820E-03	7.57000E-05	5.58677E-01
1.7500E+02	1.0176E+01	5.00100E-03	7.91150E-05	5.68679E-01
1.7700E+02	9.9438E+00	5.12750E-03	8.01100E-05	5.78934E-01
1.7900E+02	9.7194E+00	4.91945E-03	7.84700E-05	5.88773E-01
1.8100E+02	9.5025E+00	4.09735E-03	7.16200E-05	5.96967E-01
1.8300E+02	9.2929E+00	3.30650E-03	6.43450E-05	6.03580E-01
1.8500E+02	9.0901E+00	2.70020E-03	5.81600E-05	6.08981E-01
1.8700E+02	8.8939E+00	2.22985E-03	5.28600E-05	6.13440E-01
1.8900E+02	8.7041E+00	2.01785E-03	5.02900E-05	6.17476E-01
1.9100E+02	8.5203E+00	1.75705E-03	4.69380E-05	6.20990E-01
1.9300E+02	8.3423E+00	1.54930E-03	4.40845E-05	6.24089E-01
1.9500E+02	8.1698E+00	1.29955E-03	4.03875E-05	6.26688E-01
1.9700E+02	8.0026E+00	1.09180E-03	3.70330E-05	6.28872E-01
1.9900E+02	7.8406E+00	1.05280E-03	3.63680E-05	6.30977E-01
2.0100E+02	7.6834E+00	9.15400E-04	3.39245E-05	6.32808E-01
2.0300E+02	7.5310E+00	1.00125E-03	3.54715E-05	6.34810E-01
2.0500E+02	7.3830E+00	1.10170E-03	3.71995E-05	6.37014E-01
2.0700E+02	7.2394E+00	1.44720E-03	4.26120E-05	6.39908E-01
2.0900E+02	7.0999E+00	1.47245E-03	4.29805E-05	6.42853E-01
2.1100E+02	6.9645E+00	1.81700E-03	4.77305E-05	6.46487E-01
2.1300E+02	6.8329E+00	1.78855E-03	4.73560E-05	6.50064E-01
2.1500E+02	6.7050E+00	1.70530E-03	4.62440E-05	6.53475E-01
2.1700E+02	6.5807E+00	1.67075E-03	4.57740E-05	6.56816E-01
2.1900E+02	6.4598E+00	1.45570E-03	4.27365E-05	6.59728E-01
2.2100E+02	6.3422E+00	1.18250E-03	3.85335E-05	6.62093E-01
2.2300E+02	6.2278E+00	1.11105E-03	3.73565E-05	6.64315E-01
2.2500E+02	6.1165E+00	1.24175E-03	3.94830E-05	6.66798E-01
2.2700E+02	6.0082E+00	1.37715E-03	4.15720E-05	6.69553E-01

2.2900E+02	5.9027E+00	1.36960E-03	4.14575E-05	6.72292E-01
2.3100E+02	5.8000E+00	1.30125E-03	4.04145E-05	6.74894E-01
2.3300E+02	5.6999E+00	1.26880E-03	3.99085E-05	6.77432E-01
2.3500E+02	5.6025E+00	1.12690E-03	3.76205E-05	6.79686E-01
2.3700E+02	5.5075E+00	1.21815E-03	3.91075E-05	6.82122E-01
2.3900E+02	5.4149E+00	1.01710E-03	3.57490E-05	6.84156E-01
2.4100E+02	5.3246E+00	1.03395E-03	3.60430E-05	6.86224E-01
2.4300E+02	5.2366E+00	1.15240E-03	3.80425E-05	6.88529E-01
2.4500E+02	5.1508E+00	1.23500E-03	3.93760E-05	6.90999E-01
2.4700E+02	5.0670E+00	1.23880E-03	3.94365E-05	6.93477E-01
2.4900E+02	4.9853E+00	1.25355E-03	3.96695E-05	6.95984E-01
2.5100E+02	4.9056E+00	1.13675E-03	3.77845E-05	6.98257E-01
2.5300E+02	4.8277E+00	1.20815E-03	3.89475E-05	7.00673E-01
2.5500E+02	4.7517E+00	1.23520E-03	3.93790E-05	7.03144E-01
2.5700E+02	4.6775E+00	1.18935E-03	3.86440E-05	7.05523E-01
2.5900E+02	4.6050E+00	1.13355E-03	3.77310E-05	7.07790E-01
2.6100E+02	4.5342E+00	1.11765E-03	3.74665E-05	7.10025E-01
2.6300E+02	4.4650E+00	1.06325E-03	3.65475E-05	7.12151E-01
2.6500E+02	4.3974E+00	1.02055E-03	3.58100E-05	7.14193E-01
2.6700E+02	4.3313E+00	9.89400E-04	3.52615E-05	7.16171E-01
2.6900E+02	4.2667E+00	9.27300E-04	3.41430E-05	7.18026E-01
2.7100E+02	4.2035E+00	9.94750E-04	3.53560E-05	7.20015E-01
2.7300E+02	4.1417E+00	1.00540E-03	3.55440E-05	7.22026E-01
2.7500E+02	4.0813E+00	9.88650E-04	3.52485E-05	7.24004E-01
2.7700E+02	4.0222E+00	8.84400E-04	3.33485E-05	7.25772E-01
2.7900E+02	3.9644E+00	9.28350E-04	3.41625E-05	7.27629E-01
2.8100E+02	3.9078E+00	8.46100E-04	3.26220E-05	7.29321E-01
2.8300E+02	3.8524E+00	7.59750E-04	3.09230E-05	7.30841E-01
2.8500E+02	3.7982E+00	7.11500E-04	2.99320E-05	7.32264E-01
2.8700E+02	3.7452E+00	7.74750E-04	3.12250E-05	7.33813E-01
2.8900E+02	3.6932E+00	7.00700E-04	2.97055E-05	7.35215E-01
2.9100E+02	3.6423E+00	6.68350E-04	2.90170E-05	7.36551E-01
2.9300E+02	3.5925E+00	6.37000E-04	2.83330E-05	7.37825E-01
2.9500E+02	3.5437E+00	6.25950E-04	2.80890E-05	7.39077E-01
2.9700E+02	3.4958E+00	5.68950E-04	2.67900E-05	7.40215E-01
2.9900E+02	3.4490E+00	6.51200E-04	2.86450E-05	7.41518E-01
3.0100E+02	3.4030E+00	5.32650E-04	2.59290E-05	7.42583E-01
3.0300E+02	3.3580E+00	6.79300E-04	2.92515E-05	7.43941E-01
3.0500E+02	3.3139E+00	6.05900E-04	2.76385E-05	7.45153E-01
3.0700E+02	3.2706E+00	5.91600E-04	2.73135E-05	7.46336E-01
3.0900E+02	3.2282E+00	6.68900E-04	2.90290E-05	7.47674E-01
3.1100E+02	3.1866E+00	6.51900E-04	2.86605E-05	7.48978E-01
3.1300E+02	3.1458E+00	6.89650E-04	2.94720E-05	7.50357E-01
3.1500E+02	3.1058E+00	6.85400E-04	2.93815E-05	7.51728E-01
3.1700E+02	3.0665E+00	7.66400E-04	3.10575E-05	7.53261E-01
3.1900E+02	3.0280E+00	7.90500E-04	3.15390E-05	7.54842E-01
3.2100E+02	2.9902E+00	7.34550E-04	3.04100E-05	7.56311E-01
3.2300E+02	2.9531E+00	6.28350E-04	2.81415E-05	7.57568E-01

3.2500E+02	2.9167E+00	5.21500E-04	2.56590E-05	7.58611E-01
3.2700E+02	2.8810E+00	5.15500E-04	2.55125E-05	7.59642E-01
3.2900E+02	2.8459E+00	4.85695E-04	2.47710E-05	7.60613E-01
3.3100E+02	2.8115E+00	5.75100E-04	2.69335E-05	7.61763E-01
3.3300E+02	2.7777E+00	5.35700E-04	2.60020E-05	7.62835E-01
3.3500E+02	2.7444E+00	6.08800E-04	2.77040E-05	7.64052E-01
3.3700E+02	2.7118E+00	5.98050E-04	2.74605E-05	7.65248E-01
3.3900E+02	2.6798E+00	6.82250E-04	2.93150E-05	7.66613E-01
3.4100E+02	2.6483E+00	6.85500E-04	2.93835E-05	7.67984E-01
3.4300E+02	2.6174E+00	7.54400E-04	3.08150E-05	7.69493E-01
3.4500E+02	2.5870E+00	7.19950E-04	3.01080E-05	7.70933E-01
3.4700E+02	2.5571E+00	6.76450E-04	2.91905E-05	7.72286E-01
3.4900E+02	2.5278E+00	7.19800E-04	3.01050E-05	7.73725E-01
3.5100E+02	2.4990E+00	6.93100E-04	2.95455E-05	7.75111E-01
3.5300E+02	2.4706E+00	6.13850E-04	2.78175E-05	7.76339E-01
3.5500E+02	2.4427E+00	6.78400E-04	2.92320E-05	7.77696E-01
3.5700E+02	2.4153E+00	6.86750E-04	2.94100E-05	7.79069E-01
3.5900E+02	2.3884E+00	5.89150E-04	2.72565E-05	7.80248E-01
3.6100E+02	2.3619E+00	6.60050E-04	2.88370E-05	7.81568E-01
3.6300E+02	2.3359E+00	6.38100E-04	2.83570E-05	7.82844E-01
3.6500E+02	2.3102E+00	5.74950E-04	2.69290E-05	7.83994E-01
3.6700E+02	2.2850E+00	6.18000E-04	2.79110E-05	7.85230E-01
3.6900E+02	2.2602E+00	5.99150E-04	2.74850E-05	7.86428E-01
3.7100E+02	2.2359E+00	5.98700E-04	2.74755E-05	7.87626E-01
3.7300E+02	2.2119E+00	4.94315E-04	2.49875E-05	7.88614E-01
3.7500E+02	2.1882E+00	5.55850E-04	2.64830E-05	7.89726E-01
3.7700E+02	2.1650E+00	4.88330E-04	2.48375E-05	7.90703E-01
3.7900E+02	2.1421E+00	4.82840E-04	2.46985E-05	7.91668E-01
3.8100E+02	2.1196E+00	4.71360E-04	2.44065E-05	7.92611E-01
3.8300E+02	2.0975E+00	5.10600E-04	2.53920E-05	7.93632E-01
3.8500E+02	2.0757E+00	4.26540E-04	2.32300E-05	7.94485E-01
3.8700E+02	2.0542E+00	3.60655E-04	2.13835E-05	7.95207E-01
3.8900E+02	2.0331E+00	3.88415E-04	2.21805E-05	7.95983E-01
3.9100E+02	2.0123E+00	4.38030E-04	2.35370E-05	7.96859E-01
3.9300E+02	1.9918E+00	4.72550E-04	2.44370E-05	7.97805E-01
3.9500E+02	1.9716E+00	4.31790E-04	2.33710E-05	7.98668E-01
3.9700E+02	1.9517E+00	4.03955E-04	2.26140E-05	7.99476E-01
3.9900E+02	1.9321E+00	4.09545E-04	2.27680E-05	8.00295E-01
4.0100E+02	1.9128E+00	3.72920E-04	2.17390E-05	8.01041E-01
4. 300E+02	1.8938E+00	3.52675E-04	2.11490E-05	8.01746E-01
4.0500E+02	1.8751E+00	3.25925E-04	2.03430E-05	8.02398E-01
4.0700E+02	1.8567E+00	3.27620E-04	2.03950E-05	8.03053E-01
4.0900E+02	1.8385E+00	2.79315E-04	1.88560E-05	8.03612E-01
4.1100E+02	1.8206E+00	2.73570E-04	1.86645E-05	8.04159E-01
4.1300E+02	1.8030E+00	2.91605E-04	1.92590E-05	8.04742E-01
4.1500E+02	1.7856E+00	2.68565E-04	1.84960E-05	8.05280E-01
4.1700E+02	1.7685E+00	1.82895E-04	1.53295E-05	8.05645E-01
4.1900E+02	1.7516E+00	1.93910E-04	1.57725E-05	8.06033E-01

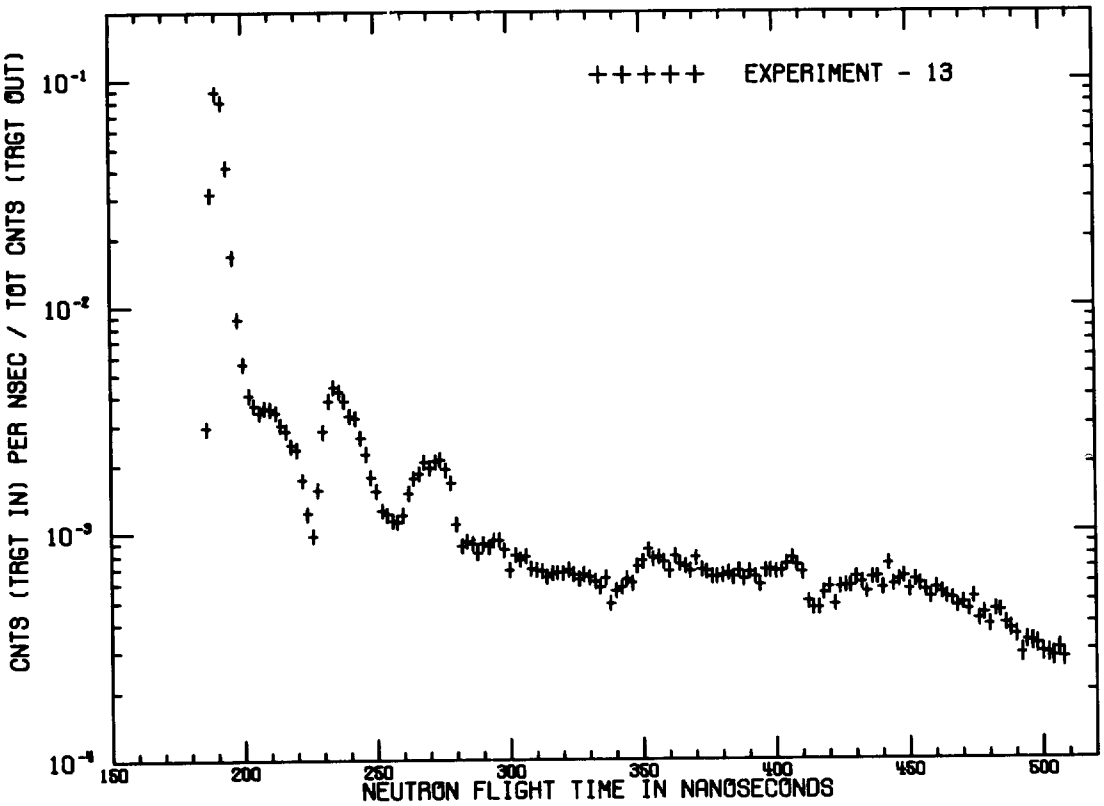

CARBON - 1.3 M.F.P. - 120 DEG.

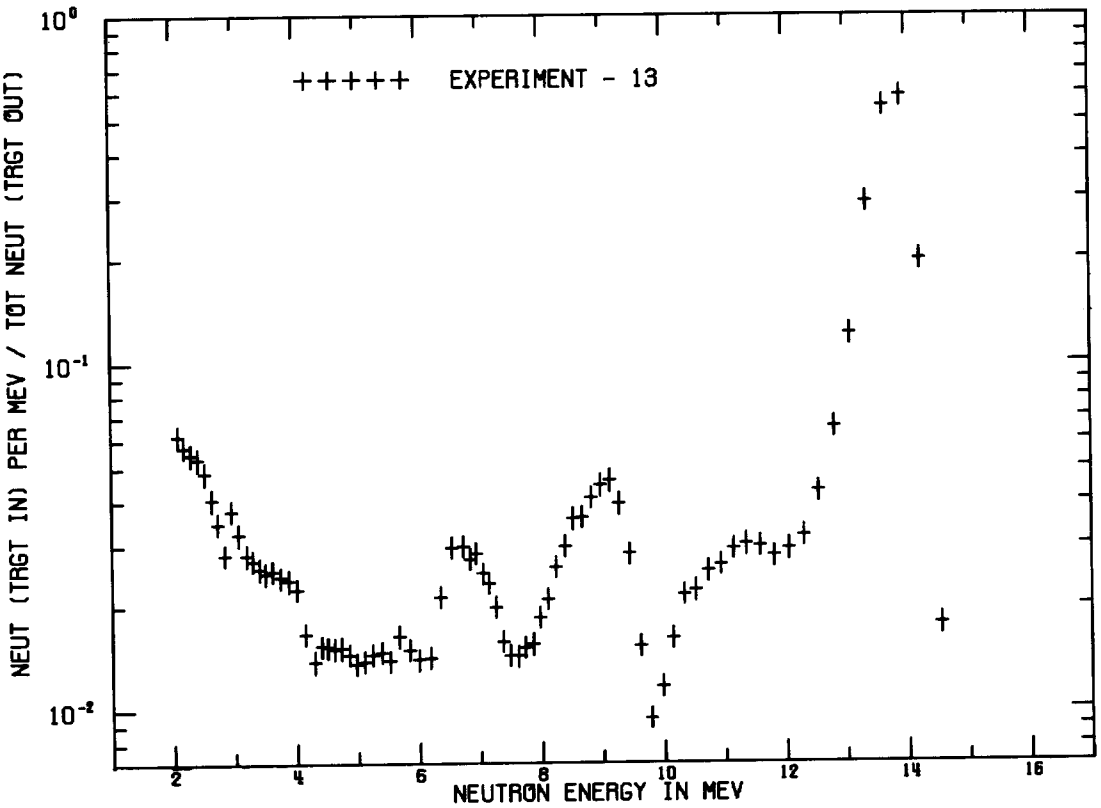

CARBON - 1.3 M.F.P. - 120 DEG.

CARBON - 1.3 M.F.P. - 120 DEG.
FLIGHTPATH = 975.20 CM DETECTOR = NE213 FWHM = 4 NS

TIME(NS)	CALCULATED ENERGY(MEV)	CNT/NS/SOURCE	ERROR	INTEGRAL
1.8500E+02	1.4868E+01	2.53925E-04	2.45970E-05	5.07850E-04
1.8700E+02	1.4544E+01	2.90435E-03	8.18350E-05	6.31655E-03
1.8900E+02	1.4231E+01	3.13740E-02	2.68580E-04	6.90645E-02
1.9100E+02	1.3928E+01	8.89900E-02	4.52285E-04	2.47045E-01
1.9300E+02	1.3634E+01	8.02750E-02	4.29585E-04	4.07595E-01
1.9500E+02	1.3350E+01	4.11965E-02	3.07755E-04	4.89988E-01
1.9700E+02	1.3075E+01	1.66640E-02	1.95765E-04	5.23316E-01
1.9900E+02	1.2808E+01	8.75600E-03	1.41940E-04	5.40828E-01
2.0100E+02	1.2549E+01	5.57800E-03	1.13325E-04	5.51984E-01
2.0300E+02	1.2298E+01	4.06165E-03	9.67350E-05	5.60107E-01
2.0500E+02	1.2055E+01	3.64205E-03	9.16100E-05	5.67391E-01
2.0700E+02	1.1819E+01	3.39905E-03	8.85100E-05	5.74189E-01
2.0900E+02	1.1589E+01	3.56445E-03	9.06350E-05	5.81318E-01
2.1100E+02	1.1367E+01	3.54180E-03	9.03450E-05	5.88402E-01
2.1300E+02	1.1150E+01	3.38980E-03	8.83900E-05	5.95181E-01
2.1500E+02	1.0940E+01	2.99500E-03	8.31000E-05	6.01171E-01
2.1700E+02	1.0736E+01	2.82570E-03	8.07250E-05	6.06823E-01
2.1900E+02	1.0538E+01	2.43605E-03	7.49700E-05	6.11695E-01
2.2100E+02	1.0345E+01	2.33585E-03	7.34200E-05	6.16366E-01
2.2300E+02	1.0157E+01	1.71775E-03	6.30050E-05	6.19802E-01
2.2500E+02	9.9743E+00	1.22130E-03	5.31850E-05	6.22244E-01
2.2700E+02	9.7966E+00	9.70200E-04	4.74485E-05	6.24185E-01
2.2900E+02	9.6236E+00	1.54635E-03	5.97950E-05	6.27278E-01
2.3100E+02	9.4551E+00	2.80555E-03	8.04350E-05	6.32889E-01
2.3300E+02	9.2911E+00	3.83395E-03	9.39900E-05	6.40557E-01
2.3500E+02	9.1313E+00	4.39515E-03	1.00615E-04	6.49347E-01
2.3700E+02	8.9757E+00	4.20715E-03	9.84450E-05	6.57761E-01
2.3900E+02	8.8240E+00	3.82035E-03	9.38200E-05	6.65402E-01
2.4100E+02	8.6761E+00	3.28890E-03	8.70700E-05	6.71980E-01
2.4300E+02	8.5319E+00	3.20235E-03	8.59200E-05	6.78384E-01
2.4500E+02	8.3913E+00	2.62380E-03	7.77950E-05	6.83632E-01
2.4700E+02	8.2542E+00	2.24225E-03	7.19400E-05	6.88116E-01
2.4900E+02	8.1204E+00	1.76865E-03	6.39250E-05	6.91654E-01
2.5100E+02	7.9899E+00	1.53310E-03	5.95400E-05	6.94720E-01
2.5300E+02	7.8625E+00	1.25835E-03	5.39800E-05	6.97237E-01
2.5500E+02	7.7381E+00	1.20805E-03	5.28950E-05	6.99653E-01
2.5700E+02	7.6167E+00	1.12800E-03	5.11300E-05	7.01909E-01
2.5900E+02	7.4981E+00	1.11370E-03	5.08050E-05	7.04136E-01
2.6100E+02	7.3822E+00	1.20265E-03	5.27800E-05	7.06541E-01
2.6300E+02	7.2691E+00	1.49365E-03	5.87750E-05	7.09529E-01
2.6500E+02	7.1585E+00	1.74120E-03	6.34300E-05	7.13011E-01
2.6700E+02	7.0505E+00	1.82435E-03	6.49200E-05	7.16660E-01
2.6900E+02	6.9449E+00	2.05205E-03	6.88350E-05	7.20764E-01
2.7100E+02	6.8416E+00	1.93915E-03	6.69200E-05	7.24642E-01
2.7300E+02	6.7407E+00	2.06945E-03	6.91250E-05	7.28781E-01

2.7500E+02	6.6419E+00	2.11185E-03	6.98250E-05	7.33005E-01
2.7700E+02	6.5454E+00	1.90550E-03	6.63400E-05	7.36816E-01
2.7900E+02	6.4509E+00	1.66925E-03	6.21150E-05	7.40154E-01
2.8100E+02	6.3585E+00	1.08895E-03	5.02450E-05	7.42332E-01
2.8300E+02	6.2680E+00	8.70850E-04	4.49780E-05	7.44074E-01
2.8500E+02	6.1795E+00	9.13800E-04	4.60620E-05	7.45902E-01
2.8700E+02	6.0928E+00	8.91800E-04	4.55100E-05	7.47685E-01
2.8900E+02	6.0080E+00	8.15800E-04	4.35485E-05	7.49317E-01
2.9100E+02	5.9249E+00	8.92450E-04	4.55260E-05	7.51102E-01
2.9300E+02	5.8435E+00	8.69850E-04	4.49530E-05	7.52841E-01
2.9500E+02	5.7638E+00	9.27700E-04	4.64085E-05	7.54697E-01
2.9700E+02	5.6858E+00	9.31150E-04	4.64930E-05	7.56559E-01
2.9900E+02	5.6093E+00	8.39950E-04	4.41815E-05	7.58239E-01
3.0100E+02	5.5343E+00	6.84300E-04	3.99280E-05	7.59608E-01
3.0300E+02	5.4609E+00	7.94300E-04	4.29780E-05	7.61196E-01
3.0500E+02	5.3889E+00	7.59350E-04	4.20325E-05	7.62715E-01
3.0700E+02	5.3183E+00	7.87700E-04	4.28000E-05	7.64290E-01
3.0900E+02	5.2491E+00	6.92600E-04	4.01660E-05	7.65675E-01
3.1100E+02	5.1812E+00	6.86400E-04	3.99880E-05	7.67048E-01
3.1300E+02	5.1147E+00	6.78050E-04	3.97475E-05	7.68404E-01
3.1500E+02	5.0494E+00	6.36000E-04	3.85135E-05	7.69676E-01
3.1700E+02	4.9854E+00	6.59050E-04	3.91935E-05	7.70994E-01
3.1900E+02	4.9226E+00	6.65050E-04	3.93705E-05	7.72325E-01
3.2100E+02	4.8610E+00	6.63900E-04	3.93365E-05	7.73652E-01
3.2300E+02	4.8005E+00	6.82800E-04	3.98840E-05	7.75018E-01
3.2500E+02	4.7412E+00	6.52750E-04	3.90100E-05	7.76323E-01
3.2700E+02	4.6829E+00	6.22800E-04	3.81160E-05	7.77569E-01
3.2900E+02	4.6257E+00	6.54950E-04	3.90740E-05	7.78879E-01
3.3100E+02	4.5696E+00	6.33400E-04	3.84350E-05	7.80146E-01
3.3300E+02	4.5145E+00	6.08150E-04	3.76715E-05	7.81362E-01
3.3500E+02	4.4603E+00	5.72100E-04	3.65555E-05	7.82506E-01
3.3700E+02	4.4072E+00	6.30600E-04	3.83515E-05	7.83767E-01
3.3900E+02	4.3550E+00	4.85610E-04	3.37275E-05	7.84739E-01
3.4100E+02	4.3037E+00	5.53800E-04	3.59760E-05	7.85846E-01
3.4300E+02	4.2533E+00	5.73700E-04	3.66070E-05	7.86994E-01
3.4500E+02	4.2038E+00	6.25150E-04	3.81875E-05	7.88244E-01
3.4700E+02	4.1552E+00	5.98000E-04	3.73615E-05	7.89440E-01
3.4900E+02	4.1074E+00	7.06100E-04	4.05505E-05	7.90852E-01
3.5100E+02	4.0604E+00	7.46250E-04	4.16735E-05	7.92345E-01
3.5300E+02	4.0142E+00	8.38850E-04	4.41525E-05	7.94022E-01
3.5500E+02	3.9688E+00	7.64750E-04	4.21805E-05	7.95552E-01
3.5700E+02	3.9242E+00	7.78750E-04	4.25595E-05	7.97109E-01
3.5900E+02	3.8803E+00	7.41950E-04	4.15535E-05	7.98593E-01
3.6100E+02	3.8372E+00	6.76950E-04	3.97155E-05	7.99947E-01
3.6300E+02	3.7948E+00	7.87750E-04	4.28020E-05	8.01523E-01
3.6500E+02	3.7531E+00	7.27850E-04	4.11620E-05	8.02978E-01
3.6700E+02	3.7120E+00	7.11150E-04	4.06935E-05	8.04401E-01
3.6900E+02	3.6717E+00	6.73550E-04	3.96170E-05	8.05748E-01

3.7100E+02	3.6319E+00	7.72850E-04	4.24000E-05	8.07293E-01
3.7300E+02	3.5929E+00	6.81200E-04	3.98380E-05	8.08656E-01
3.7500E+02	3.5544E+00	6.72250E-04	3.95790E-05	8.10000E-01
3.7700E+02	3.5166E+00	6.39950E-04	3.86305E-05	8.11280E-01
3.7900E+02	3.4794E+00	6.34950E-04	3.84815E-05	8.12550E-01
3.8100E+02	3.4428E+00	6.44600E-04	3.87680E-05	8.13839E-01
3.8300E+02	3.4067E+00	6.58950E-04	3.91915E-05	8.15157E-01
3.8500E+02	3.3712E+00	6.33600E-04	3.84410E-05	8.16424E-01
3.8700E+02	3.3363E+00	6.76450E-04	3.97020E-05	8.17777E-01
3.8900E+02	3.3019E+00	6.25200E-04	3.81895E-05	8.19028E-01
3.9100E+02	3.2680E+00	6.69000E-04	3.94845E-05	8.20366E-01
3.9300E+02	3.2346E+00	6.38250E-04	3.85805E-05	8.21642E-01
3.9500E+02	3.2018E+00	5.89850E-04	3.71100E-05	8.22822E-01
3.9700E+02	3.1695E+00	6.80500E-04	3.98190E-05	8.24183E-01
3.9900E+02	3.1376E+00	6.80150E-04	3.98085E-05	8.25543E-01
4.0100E+02	3.1062E+00	6.72000E-04	3.95715E-05	8.26887E-01
4.0300E+02	3.0753E+00	6.74850E-04	3.96555E-05	8.28237E-01
4.0500E+02	3.0449E+00	7.28500E-04	4.11805E-05	8.29694E-01
4.0700E+02	3.0149E+00	7.71400E-04	4.23605E-05	8.31237E-01
4.0900E+02	2.9853E+00	7.15750E-04	4.08235E-05	8.32668E-01
4.1100E+02	2.9562E+00	6.63600E-04	3.93280E-05	8.33995E-01
4.1300E+02	2.9275E+00	4.95975E-04	3.40790E-05	8.34987E-01
4.1500E+02	2.8992E+00	4.63945E-04	3.29810E-05	8.35915E-01
4.1700E+02	2.8714E+00	4.63120E-04	3.29520E-05	8.36842E-01
4.1900E+02	2.8439E+00	5.42750E-04	3.56210E-05	8.37927E-01
4.2100E+02	2.8168E+00	5.75050E-04	3.66495E-05	8.39077E-01
4.2300E+02	2.7901E+00	4.83145E-04	3.36435E-05	8.40043E-01
4.2500E+02	2.7638E+00	5.73600E-04	3.66040E-05	8.41191E-01
4.2700E+02	2.7379E+00	5.80800E-04	3.68285E-05	8.42352E-01
4.2900E+02	2.7123E+00	5.81700E-04	3.68565E-05	8.43516E-01
4.3100E+02	2.6871E+00	6.33100E-04	3.84255E-05	8.44782E-01
4.3300E+02	2.6622E+00	6.03450E-04	3.75280E-05	8.45989E-01
4.3500E+02	2.6377E+00	5.44800E-04	3.56875E-05	8.47078E-01
4.3700E+02	2.6135E+00	6.28450E-04	3.82860E-05	8.48335E-01
4.3900E+02	2.5896E+00	6.34050E-04	3.84540E-05	8.49603E-01
4.4100E+02	2.5661E+00	5.67600E-04	3.64135E-05	8.50739E-01
4.4300E+02	2.5429E+00	7.22250E-04	4.10055E-05	8.52183E-01
4.4500E+02	2.5200E+00	5.87700E-04	3.70430E-05	8.53358E-01
4.4700E+02	2.4974E+00	6.12950E-04	3.78180E-05	8.54584E-01
4.4900E+02	2.4751E+00	6.38850E-04	3.85985E-05	8.55862E-01
4.5100E+02	2.4531E+00	5.56700E-04	3.60680E-05	8.56975E-01
4.5300E+02	2.4314E+00	6.17300E-04	3.79500E-05	8.58210E-01
4.5500E+02	2.4100E+00	5.90650E-04	3.71340E-05	8.59391E-01
4.5700E+02	2.3889E+00	5.54350E-04	3.59930E-05	8.60500E-01
4.5900E+02	2.3680E+00	5.14750E-04	3.47055E-05	8.61530E-01
4.6100E+02	2.3475E+00	5.65750E-04	3.63555E-05	8.62661E-01
4.6300E+02	2.3271E+00	5.42650E-04	3.56185E-05	8.63746E-01
4.6500E+02	2.3071E+00	5.18450E-04	3.48285E-05	8.64783E-01

4.6700E+02	2.2873E+00	5.07750E-04	3.44730E-05	8.65799E-01
4.6900E+02	2.2678E+00	4.71320E-04	3.32370E-05	8.66741E-01
4.7100E+02	2.2485E+00	4.85840E-04	3.37355E-05	8.67713E-01
4.7300E+02	2.2294E+00	4.53245E-04	3.26060E-05	8.68620E-01
4.7500E+02	2.2106E+00	5.15500E-04	3.47305E-05	8.69651E-01
4.7700E+02	2.1921E+00	4.11600E-04	3.11035E-05	8.70474E-01
4.7900E+02	2.1737E+00	4.37075E-04	3.20310E-05	8.71348E-01
4.8100E+02	2.1556E+00	3.88065E-04	3.02215E-05	8.72124E-01
4.8300E+02	2.1378E+00	4.55055E-04	3.26695E-05	8.73034E-01
4.8500E+02	2.1201E+00	4.48720E-04	3.24460E-05	8.73932E-01
4.8700E+02	2.1027E+00	3.92860E-04	3.04030E-05	8.74717E-01
4.8900E+02	2.0855E+00	3.72365E-04	2.96180E-05	8.75462E-01
4.9100E+02	2.0684E+00	3.52135E-04	2.88225E-05	8.76166E-01
4.9300E+02	2.0516E+00	2.90975E-04	2.62710E-05	8.76748E-01
4.9500E+02	2.0350E+00	3.31045E-04	2.79690E-05	8.77410E-01
4.9700E+02	2.0186E+00	3.26245E-04	2.77710E-05	8.78063E-01
4.9900E+02	2.0024E+00	3.18030E-04	2.74290E-05	8.78699E-01
5.0100E+02	1.9864E+00	2.92505E-04	2.63380E-05	8.79284E-01
5.0300E+02	1.9706E+00	2.89820E-04	2.62205E-05	8.79864E-01
5.0500E+02	1.9550E+00	2.81150E-04	2.58375E-05	8.80426E-01
5.0700E+02	1.9396E+00	3.05260E-04	2.68885E-05	8.81036E-01
5.0900E+02	1.9243E+00	2.77650E-04	2.56815E-05	8.81592E-01

Carbon 2.9 m.f.p.

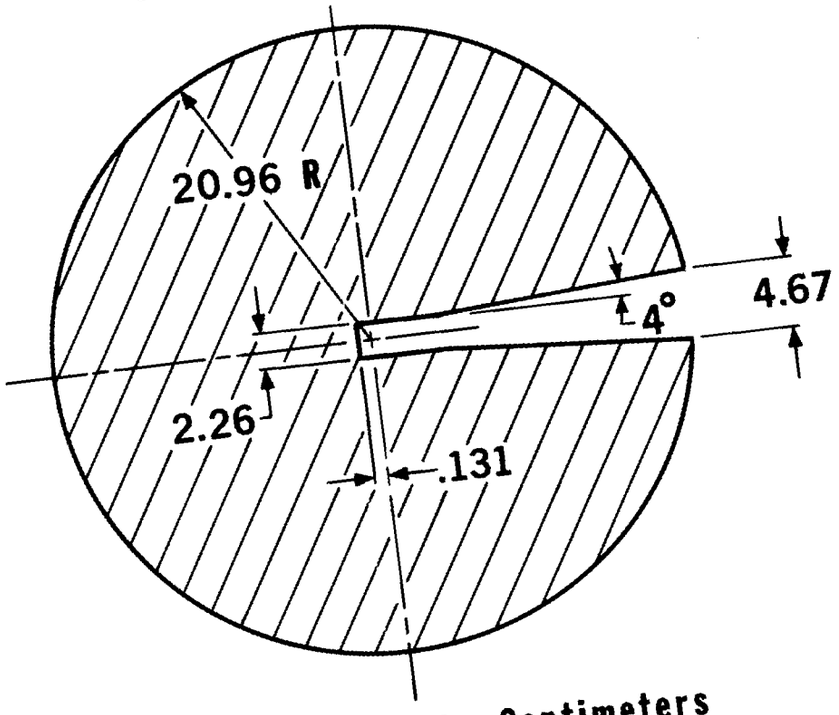

All Dimensions in Centimeters

Mass = 71,118 grams

99.995 % C

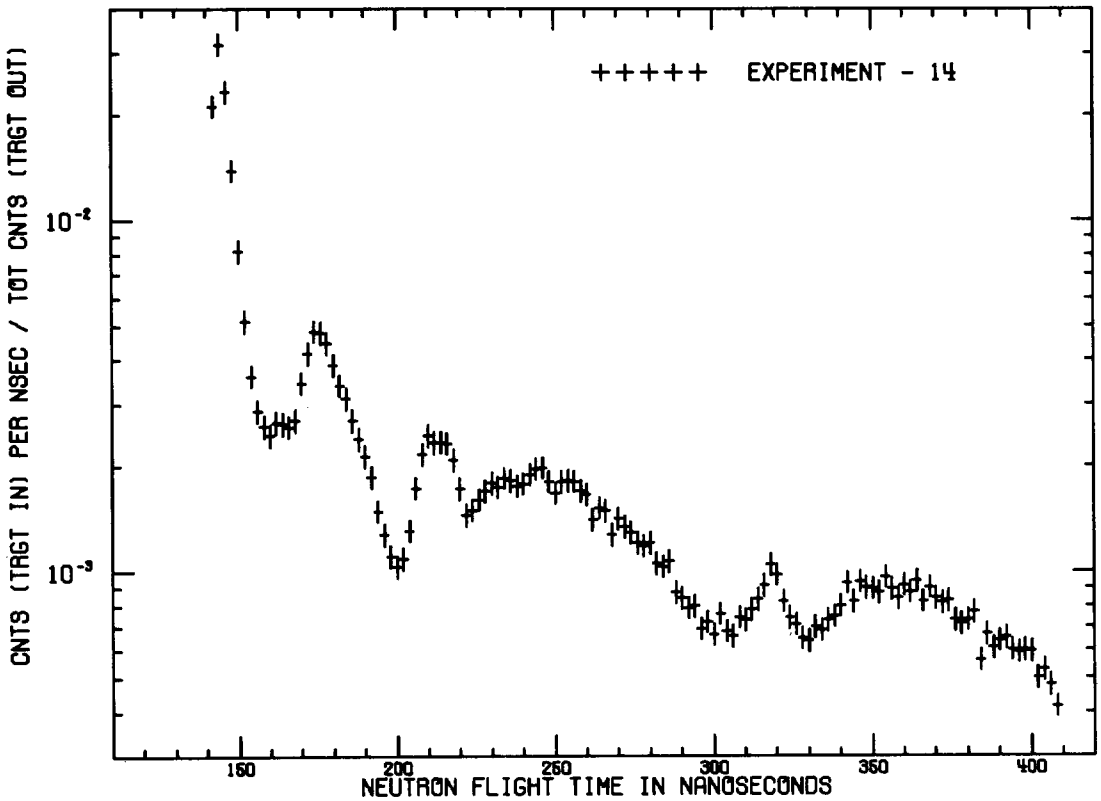

CARBON - 2.9 M.F.P. - 30 DEG.

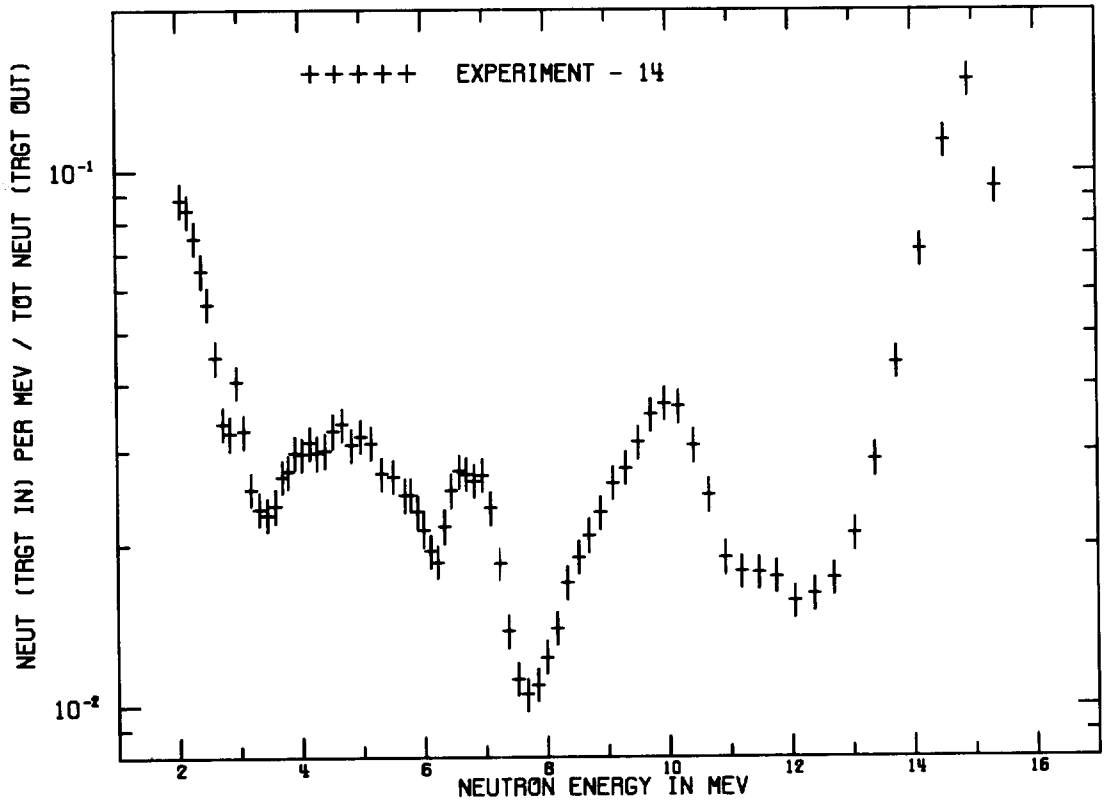

CARBON - 2.9 M.F.P. - 30 DEG.

CARBON - 2.9 M.F.P. - 30 DEG.
FLIGHTPATH = 766.00 CM DETECTOR = NE213 FWHM = 4 NS

TIME(NS)	CALCULATED ENERGY(MEV)	CNT/NS/SOURCE	ERROR	INTEGRAL
1.4100E+02	1.5815E+01	7.50500E-03	1.12200E-04	1.50100E-02
1.4300E+02	1.5365E+01	2.11305E-02	1.88215E-04	5.72710E-02
1.4500E+02	1.4934E+01	3.17815E-02	2.30815E-04	1.20834E-01
1.4700E+02	1.4521E+01	2.32280E-02	1.97330E-04	1.67290E-01
1.4900E+02	1.4125E+01	1.38650E-02	1.52470E-04	1.95020E-01
1.5100E+02	1.3745E+01	8.14250E-03	1.16865E-04	2.11305E-01
1.5300E+02	1.3380E+01	5.13000E-03	9.27850E-05	2.21565E-01
1.5500E+02	1.3030E+01	3.58965E-03	7.76350E-05	2.28744E-01
1.5700E+02	1.2693E+01	2.85790E-03	6.92900E-05	2.34460E-01
1.5900E+02	1.2370E+01	2.58925E-03	6.59600E-05	2.39639E-01
1.6100E+02	1.2058E+01	2.43555E-03	6.39800E-05	2.44510E-01
1.6300E+02	1.1759E+01	2.64480E-03	6.66600E-05	2.49799E-01
1.6500E+02	1.1470E+01	2.62510E-03	6.64150E-05	2.55049E-01
1.6700E+02	1.1192E+01	2.57720E-03	6.58050E-05	2.60204E-01
1.6900E+02	1.0924E+01	2.68480E-03	6.71650E-05	2.65573E-01
1.7100E+02	1.0666E+01	3.43575E-03	7.59550E-05	2.72445E-01
1.7300E+02	1.0417E+01	4.16240E-03	8.35900E-05	2.80770E-01
1.7500E+02	1.0176E+01	4.81815E-03	8.99250E-05	2.90406E-01
1.7700E+02	9.9438E+00	4.76940E-03	8.94700E-05	2.99945E-01
1.7900E+02	9.7194E+00	4.45085E-03	8.64250E-05	3.08847E-01
1.8100E+02	9.5025E+00	3.86230E-03	8.05250E-05	3.16571E-01
1.8300E+02	9.2929E+00	3.37780E-03	7.53150E-05	3.23327E-01
1.8500E+02	9.0901E+00	3.10605E-03	7.22300E-05	3.29539E-01
1.8700E+02	8.8939E+00	2.68185E-03	6.71250E-05	3.34903E-01
1.8900E+02	8.7041E+00	2.38220E-03	6.32750E-05	3.39667E-01
1.9100E+02	8.5203E+00	2.12520E-03	5.97750E-05	3.43917E-01
1.9300E+02	8.3423E+00	1.85635E-03	5.58800E-05	3.47630E-01
1.9500E+02	8.1698E+00	1.48490E-03	4.99990E-05	3.50600E-01
1.9700E+02	8.0026E+00	1.27535E-03	4.63545E-05	3.53151E-01
1.9900E+02	7.8406E+00	1.10540E-03	4.31735E-05	3.55361E-01
2.0100E+02	7.6834E+00	1.03360E-03	4.17560E-05	3.57429E-01
2.0300E+02	7.5310E+00	1.08925E-03	4.28585E-05	3.59607E-01
2.0500E+02	7.3830E+00	1.30860E-03	4.69515E-05	3.62224E-01
2.0700E+02	7.2394E+00	1.73125E-03	5.39700E-05	3.65687E-01
2.0900E+02	7.0999E+00	2.16265E-03	6.02950E-05	3.70012E-01
2.1100E+02	6.9645E+00	2.43690E-03	6.39950E-05	3.74886E-01
2.1300E+02	6.8329E+00	2.32495E-03	6.25100E-05	3.79536E-01
2.1500E+02	6.7050E+00	2.33875E-03	6.26950E-05	3.84213E-01
2.1700E+02	6.5807E+00	2.31940E-03	6.24400E-05	3.88852E-01
2.1900E+02	6.4598E+00	2.07745E-03	5.91000E-05	3.93007E-01
2.2100E+02	6.3422E+00	1.72020E-03	5.38000E-05	3.96447E-01
2.2300E+02	6.2278E+00	1.45140E-03	4.94345E-05	3.99350E-01
2.2500E+02	6.1165E+00	1.49865E-03	5.02300E-05	4.02347E-01
2.2700E+02	6.0082E+00	1.60535E-03	5.19800E-05	4.05558E-01
2.2900E+02	5.9027E+00	1.69805E-03	5.34550E-05	4.08954E-01

2.3100E+02	5.8000E+00	1.78685E-03	5.48250E-05	4.12528E-01
2.3300E+02	5.6999E+00	1.74390E-03	5.41650E-05	4.16016E-01
2.3500E+02	5.6025E+00	1.84990E-03	5.57800E-05	4.19716E-01
2.3700E+02	5.5075E+00	1.81200E-03	5.52100E-05	4.23340E-01
2.3900E+02	5.4149E+00	1.75770E-03	5.43800E-05	4.26855E-01
2.4100E+02	5.3246E+00	1.78005E-03	5.47250E-05	4.30415E-01
2.4300E+02	5.2366E+00	1.89025E-03	5.63850E-05	4.34196E-01
2.4500E+02	5.1508E+00	1.96625E-03	5.75050E-05	4.38128E-01
2.4700E+02	5.0670E+00	1.98295E-03	5.77450E-05	4.42094E-01
2.4900E+02	4.9853E+00	1.81095E-03	5.51950E-05	4.45716E-01
2.5100E+02	4.9056E+00	1.67690E-03	5.31200E-05	4.49070E-01
2.5300E+02	4.8277E+00	1.80165E-03	5.50550E-05	4.52673E-01
2.5500E+02	4.7517E+00	1.81660E-03	5.52800E-05	4.56306E-01
2.5700E+02	4.6775E+00	1.80915E-03	5.51650E-05	4.59924E-01
2.5900E+02	4.6050E+00	1.70040E-03	5.34900E-05	4.63325E-01
2.6100E+02	4.5342E+00	1.65585E-03	5.27850E-05	4.66637E-01
2.6300E+02	4.4650E+00	1.40820E-03	4.86970E-05	4.69453E-01
2.6500E+02	4.3974E+00	1.52220E-03	5.06200E-05	4.72498E-01
2.6700E+02	4.3313E+00	1.48955E-03	5.00750E-05	4.75477E-01
2.6900E+02	4.2667E+00	1.27310E-03	4.63140E-05	4.78023E-01
2.7100E+02	4.2035E+00	1.41580E-03	4.88275E-05	4.80855E-01
2.7300E+02	4.1417E+00	1.34310E-03	4.75640E-05	4.83541E-01
2.7500E+02	4.0813E+00	1.29355E-03	4.66820E-05	4.86128E-01
2.7700E+02	4.0222E+00	1.20965E-03	4.51515E-05	4.88547E-01
2.7900E+02	3.9644E+00	1.18585E-03	4.47075E-05	4.90919E-01
2.8100E+02	3.9078E+00	1.20945E-03	4.51475E-05	4.93338E-01
2.8300E+02	3.8524E+00	1.05625E-03	4.22085E-05	4.95450E-01
2.8500E+02	3.7982E+00	1.03505E-03	4.17850E-05	4.97520E-01
2.8700E+02	3.7452E+00	1.07070E-03	4.24945E-05	4.99662E-01
2.8900E+02	3.6932E+00	8.73700E-04	3.84135E-05	5.01409E-01
2.9100E+02	3.6423E+00	8.39900E-04	3.76695E-05	5.03089E-01
2.9300E+02	3.5925E+00	7.89350E-04	3.65275E-05	5.04668E-01
2.9500E+02	3.5437E+00	7.96800E-04	3.66975E-05	5.06261E-01
2.9700E+02	3.4958E+00	6.88600E-04	3.41380E-05	5.07639E-01
2.9900E+02	3.4490E+00	7.20650E-04	3.49160E-05	5.09080E-01
3.0100E+02	3.4030E+00	6.63300E-04	3.35110E-05	5.10406E-01
3.0300E+02	3.3580E+00	7.60950E-04	3.58695E-05	5.11928E-01
3.0500E+02	3.3139E+00	6.73200E-04	3.38815E-05	5.13285E-01
3.0700E+02	3.2706E+00	6.55450E-04	3.33140E-05	5.14596E-01
3.0900E+02	3.2282E+00	7.42850E-04	3.54445E-05	5.16081E-01
3.1100E+02	3.1866E+00	7.29450E-04	3.51265E-05	5.17540E-01
3.1300E+02	3.1458E+00	7.80000E-04	3.63120E-05	5.19100E-01
3.1500E+02	3.1058E+00	8.34450E-04	3.75470E-05	5.20769E-01
3.1700E+02	3.0665E+00	9.15200E-04	3.93085E-05	5.22600E-01
3.1900E+02	3.0280E+00	1.04835E-03	4.20515E-05	5.24696E-01
3.2100E+02	2.9902E+00	9.82500E-04	4.07175E-05	5.26661E-01
3.2300E+02	2.9531E+00	8.24850E-04	3.73320E-05	5.28311E-01
3.2500E+02	2.9167E+00	7.41950E-04	3.54225E-05	5.29795E-01

3.2700E+02	2.8810E+00	7.10250E-04	3.46655E-05	5.31215E-01
3.2900E+02	2.8459E+00	6.48550E-04	3.31405E-05	5.32512E-01
3.3100E+02	2.8115E+00	6.37500E-04	3.28590E-05	5.33787E-01
3.3300E+02	2.7777E+00	6.97500E-04	3.43560E-05	5.35182E-01
3.3500E+02	2.7444E+00	6.84550E-04	3.40380E-05	5.36552E-01
3.3700E+02	2.7118E+00	7.29100E-04	3.51175E-05	5.38010E-01
3.3900E+02	2.6798E+00	7.49800E-04	3.56080E-05	5.39509E-01
3.4100E+02	2.6483E+00	8.00550E-04	3.67840E-05	5.41110E-01
3.4300E+02	2.6174E+00	9.32800E-04	3.96820E-05	5.42976E-01
3.4500E+02	2.5870E+00	8.22550E-04	3.72815E-05	5.44621E-01
3.4700E+02	2.5571E+00	9.38150E-04	3.97950E-05	5.46497E-01
3.4900E+02	2.5278E+00	9.00650E-04	3.89970E-05	5.48299E-01
3.5100E+02	2.4990E+00	8.97300E-04	3.89250E-05	5.50093E-01
3.5300E+02	2.4706E+00	8.73100E-04	3.84005E-05	5.51840E-01
3.5500E+02	2.4427E+00	9.67150E-04	4.04010E-05	5.53774E-01
3.5700E+02	2.4153E+00	8.94900E-04	3.88735E-05	5.55564E-01
3.5900E+02	2.3884E+00	8.43200E-04	3.77420E-05	5.57250E-01
3.6100E+02	2.3619E+00	9.18200E-04	3.93720E-05	5.59086E-01
3.6300E+02	2.3359E+00	8.76500E-04	3.84745E-05	5.60839E-01
3.6500E+02	2.3102E+00	9.41100E-04	3.98565E-05	5.62722E-01
3.6700E+02	2.2850E+00	8.24900E-04	3.73340E-05	5.64371E-01
3.6900E+02	2.2602E+00	9.04150E-04	3.90720E-05	5.66180E-01
3.7100E+02	2.2359E+00	8.42800E-04	3.77340E-05	5.67865E-01
3.7300E+02	2.2119E+00	8.17250E-04	3.71620E-05	5.69500E-01
3.7500E+02	2.1882E+00	8.27700E-04	3.73960E-05	5.71155E-01
3.7700E+02	2.1650E+00	7.29750E-04	3.51335E-05	5.72615E-01
3.7900E+02	2.1421E+00	7.13000E-04	3.47315E-05	5.74041E-01
3.8100E+02	2.1196E+00	7.31350E-04	3.51715E-05	5.75503E-01
3.8300E+02	2.0975E+00	7.68400E-04	3.60430E-05	5.77040E-01
3.8500E+02	2.0757E+00	5.62850E-04	3.08970E-05	5.78166E-01
3.8700E+02	2.0542E+00	6.67150E-04	3.36070E-05	5.79500E-01
3.8900E+02	2.0331E+00	6.07500E-04	3.20855E-05	5.80715E-01
3.9100E+02	2.0123E+00	6.38650E-04	3.28885E-05	5.81993E-01
3.9300E+02	1.9918E+00	6.50850E-04	3.31980E-05	5.83294E-01
3.9500E+02	1.9716E+00	6.01900E-04	3.19390E-05	5.84498E-01
3.9700E+02	1.9517E+00	5.92050E-04	3.16795E-05	5.85682E-01
3.9900E+02	1.9321E+00	5.99750E-04	3.18825E-05	5.86882E-01
4.0100E+02	1.9128E+00	5.94850E-04	3.17535E-05	5.88071E-01
4.0300E+02	1.8938E+00	5.01350E-04	2.91815E-05	5.89074E-01
4.0500E+02	1.8751E+00	5.28500E-04	2.99520E-05	5.90131E-01
4.0700E+02	1.8567E+00	4.78360E-04	2.85140E-05	5.91088E-01
4.0900E+02	1.8385E+00	4.16340E-04	2.66290E-05	5.91920E-01

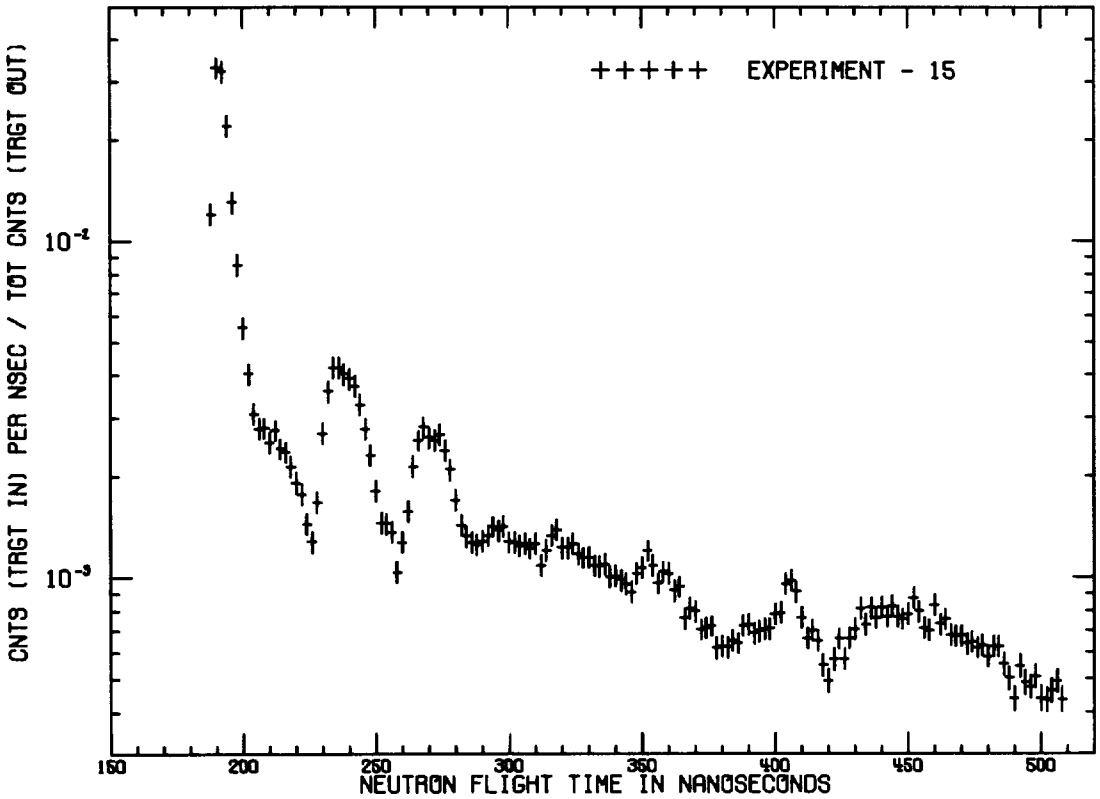

CARBON - 2.9 M.F.P. - 120 DEG.

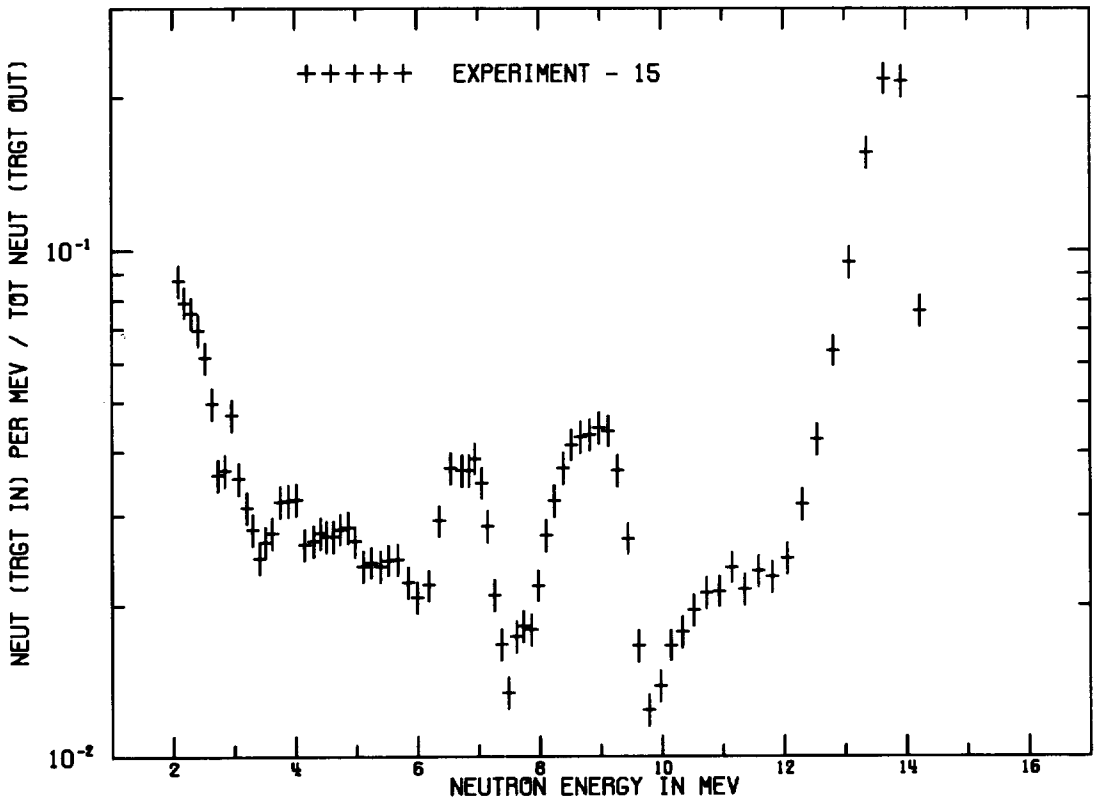

CARBON - 2.9 M.F.P. - 120 DEG.

CARBON - 2.9 M.F.P. - 120 DEG.
FLIGHTPATH = 975.20 CM DETECTOR = NE213 FWHM = 4 NS

TIME(NS)	CALCULATED ENERGY(MEV)	CNT/NS/SOURCE	ERROR	INTEGRAL
1.8700E+02	1.4544E+01	1.13500E-03	0.	2.27000E-03
1.8900E+02	1.4231E+01	1.20495E-02	1.92775E-04	2.63690E-02
1.9100E+02	1.3928E+01	3.28950E-02	3.18410E-04	9.21590E-02
1.9300E+02	1.3634E+01	3.20550E-02	3.14320E-04	1.56269E-01
1.9500E+02	1.3350E+01	2.21180E-02	2.61120E-04	2.00505E-01
1.9700E+02	1.3075E+01	1.30465E-02	2.00585E-04	2.26598E-01
1.9900E+02	1.2808E+01	8.50500E-03	1.61995E-04	2.43608E-01
2.0100E+02	1.2549E+01	5.53100E-03	1.30685E-04	2.54670E-01
2.0300E+02	1.2298E+01	4.03370E-03	1.11650E-04	2.62737E-01
2.0500E+02	1.2055E+01	3.08120E-03	9.76300E-05	2.68900E-01
2.0700E+02	1.1819E+01	2.77635E-03	9.26950E-05	2.74452E-01
2.0900E+02	1.1589E+01	2.79025E-03	9.29250E-05	2.80033E-01
2.1100E+02	1.1367E+01	2.52120E-03	8.83500E-05	2.85075E-01
2.1300E+02	1.1150E+01	2.74655E-03	9.21950E-05	2.90568E-01
2.1500E+02	1.0940E+01	2.42170E-03	8.66000E-05	2.95412E-01
2.1700E+02	1.0736E+01	2.36425E-03	8.55700E-05	3.00140E-01
2.1900E+02	1.0538E+01	2.14295E-03	8.14900E-05	3.04426E-01
2.2100E+02	1.0345E+01	1.91270E-03	7.70150E-05	3.08252E-01
2.2300E+02	1.0157E+01	1.77215E-03	7.41500E-05	3.11796E-01
2.2500E+02	9.9743E+00	1.44545E-03	6.70200E-05	3.14687E-01
2.2700E+02	9.7966E+00	1.27505E-03	6.29800E-05	3.17237E-01
2.2900E+02	9.6236E+00	1.67765E-03	7.21600E-05	3.20592E-01
2.3100E+02	9.4551E+00	2.68640E-03	9.11850E-05	3.25965E-01
2.3300E+02	9.2911E+00	3.58145E-03	1.05225E-04	3.33128E-01
2.3500E+02	9.1313E+00	4.22270E-03	1.14230E-04	3.41573E-01
2.3700E+02	8.9757E+00	4.22490E-03	1.14260E-04	3.50023E-01
2.3900E+02	8.8240E+00	4.03165E-03	1.11620E-04	3.58086E-01
2.4100E+02	8.6761E+00	3.90950E-03	1.09925E-04	3.65905E-01
2.4300E+02	8.5319E+00	3.71785E-03	1.07205E-04	3.73341E-01
2.4500E+02	8.3913E+00	3.27645E-03	1.00660E-04	3.79894E-01
2.4700E+02	8.2542E+00	2.77940E-03	9.27450E-05	3.85453E-01
2.4900E+02	8.1204E+00	2.31585E-03	8.46950E-05	3.90085E-01
2.5100E+02	7.9899E+00	1.81190E-03	7.49700E-05	3.93708E-01
2.5300E+02	7.8625E+00	1.45255E-03	6.71850E-05	3.96613E-01
2.5500E+02	7.7381E+00	1.44710E-03	6.70600E-05	3.99508E-01
2.5700E+02	7.6167E+00	1.36645E-03	6.51800E-05	4.02241E-01
2.5900E+02	7.4981E+00	1.03655E-03	5.68500E-05	4.04314E-01
2.6100E+02	7.3822E+00	1.27155E-03	6.28950E-05	4.06857E-01
2.6300E+02	7.2691E+00	1.57510E-03	6.99350E-05	4.10007E-01
2.6500E+02	7.1585E+00	2.13540E-03	8.13500E-05	4.14278E-01
2.6700E+02	7.0505E+00	2.55930E-03	8.90150E-05	4.19396E-01
2.6900E+02	6.9449E+00	2.80615E-03	9.31900E-05	4.25009E-01
2.7100E+02	6.8416E+00	2.61485E-03	8.99700E-05	4.30238E-01
2.7300E+02	6.7407E+00	2.56075E-03	8.90400E-05	4.35360E-01
2.7500E+02	6.6419E+00	2.67275E-03	9.09550E-05	4.40705E-01

2.7700E+02	6.5454E+00	2.38600E-03	8.59600E-05	4.45477E-01
2.7900E+02	6.4509E+00	2.09470E-03	8.05750E-05	4.49667E-01
2.8100E+02	6.3585E+00	1.70630E-03	7.27700E-05	4.53079E-01
2.8300E+02	6.2680E+00	1.43020E-03	6.66700E-05	4.55940E-01
2.8500E+02	6.1795E+00	1.32710E-03	6.42400E-05	4.58594E-01
2.8700E+02	6.0928E+00	1.27400E-03	6.29550E-05	4.61142E-01
2.8900E+02	6.0080E+00	1.24965E-03	6.23550E-05	4.63641E-01
2.9100E+02	5.9249E+00	1.28360E-03	6.31900E-05	4.66208E-01
2.9300E+02	5.8435E+00	1.33085E-03	6.43300E-05	4.68870E-01
2.9500E+02	5.7638E+00	1.41575E-03	6.63350E-05	4.71702E-01
2.9700E+02	5.6858E+00	1.37975E-03	6.54950E-05	4.74461E-01
2.9900E+02	5.6093E+00	1.41735E-03	6.63700E-05	4.77296E-01
3.0100E+02	5.5343E+00	1.27525E-03	6.29850E-05	4.79846E-01
3.0300E+02	5.4609E+00	1.27390E-03	6.29550E-05	4.82394E-01
3.0500E+02	5.3889E+00	1.24025E-03	6.21250E-05	4.84875E-01
3.0700E+02	5.3183E+00	1.26220E-03	6.26650E-05	4.87399E-01
3.0900E+02	5.2491E+00	1.21960E-03	6.16100E-05	4.89838E-01
3.1100E+02	5.1812E+00	1.25915E-03	6.25900E-05	4.92357E-01
3.1300E+02	5.1147E+00	1.08710E-03	5.82050E-05	4.94531E-01
3.1500E+02	5.0494E+00	1.20400E-03	6.12200E-05	4.96939E-01
3.1700E+02	4.9854E+00	1.33095E-03	6.43350E-05	4.99601E-01
3.1900E+02	4.9226E+00	1.38525E-03	6.56200E-05	5.02371E-01
3.2100E+02	4.8610E+00	1.22570E-03	6.17600E-05	5.04823E-01
3.2300E+02	4.8005E+00	1.22685E-03	6.17900E-05	5.07276E-01
3.2500E+02	4.7412E+00	1.26335E-03	6.26950E-05	5.09803E-01
3.2700E+02	4.6829E+00	1.17325E-03	6.04400E-05	5.12149E-01
3.2900E+02	4.6257E+00	1.14525E-03	5.97200E-05	5.14440E-01
3.3100E+02	4.5696E+00	1.14575E-03	5.97350E-05	5.16731E-01
3.3300E+02	4.5145E+00	1.08285E-03	5.80900E-05	5.18897E-01
3.3500E+02	4.4603E+00	1.08075E-03	5.80350E-05	5.21059E-01
3.3700E+02	4.4072E+00	1.09335E-03	5.83700E-05	5.23245E-01
3.3900E+02	4.3550E+00	1.00355E-03	5.59500E-05	5.25252E-01
3.4100E+02	4.3037E+00	1.00955E-03	5.61150E-05	5.27272E-01
3.4300E+02	4.2533E+00	9.83350E-04	5.53900E-05	5.29238E-01
3.4500E+02	4.2038E+00	9.59650E-04	5.47250E-05	5.31158E-01
3.4700E+02	4.1552E+00	9.06450E-04	5.32100E-05	5.32970E-01
3.4900E+02	4.1074E+00	1.02650E-03	5.65750E-05	5.35023E-01
3.5100E+02	4.0604E+00	1.07145E-03	5.77900E-05	5.37166E-01
3.5300E+02	4.0142E+00	1.19930E-03	6.11000E-05	5.39565E-01
3.5500E+02	3.9688E+00	1.08555E-03	5.81600E-05	5.41736E-01
3.5700E+02	3.9242E+00	9.62650E-04	5.48100E-05	5.43661E-01
3.5900E+02	3.8803E+00	1.04025E-03	5.69500E-05	5.45742E-01
3.6100E+02	3.8372E+00	1.02810E-03	5.66200E-05	5.47798E-01
3.6300E+02	3.7948E+00	9.15600E-04	5.34750E-05	5.49629E-01
3.6500E+02	3.7531E+00	9.39850E-04	5.41650E-05	5.51509E-01
3.6700E+02	3.7120E+00	7.57900E-04	4.87180E-05	5.53025E-01
3.6900E+02	3.6717E+00	8.10450E-04	5.03500E-05	5.54646E-01
3.7100E+02	3.6319E+00	7.95150E-04	4.98820E-05	5.56236E-01

3.7300E+02	3.5929E+00	7.01800E-04	4.69095E-05	5.57640E-01
3.7500E+02	3.5544E+00	7.11000E-04	4.72115E-05	5.59062E-01
3.7700E+02	3.5166E+00	7.19200E-04	4.74785E-05	5.60500E-01
3.7900E+02	3.4794E+00	6.18850E-04	4.41030E-05	5.61738E-01
3.8100E+02	3.4428E+00	6.26150E-04	4.43555E-05	5.62990E-01
3.8300E+02	3.4067E+00	6.23400E-04	4.42600E-05	5.64237E-01
3.8500E+02	3.3712E+00	6.52100E-04	4.52485E-05	5.65541E-01
3.8700E+02	3.3363E+00	6.38500E-04	4.47835E-05	5.66818E-01
3.8900E+02	3.3019E+00	7.19650E-04	4.74925E-05	5.68257E-01
3.9100E+02	3.2680E+00	7.26100E-04	4.77020E-05	5.69709E-01
3.9300E+02	3.2346E+00	6.83850E-04	4.63175E-05	5.71077E-01
3.9500E+02	3.2018E+00	6.94850E-04	4.66810E-05	5.72467E-01
3.9700E+02	3.1695E+00	7.03000E-04	4.69500E-05	5.73873E-01
3.9900E+02	3.1376E+00	7.06150E-04	4.70525E-05	5.75285E-01
4.0100E+02	3.1062E+00	7.79100E-04	4.93825E-05	5.76843E-01
4.0300E+02	3.0753E+00	7.85450E-04	4.95810E-05	5.78414E-01
4.0500E+02	3.0449E+00	9.56350E-04	5.46350E-05	5.80327E-01
4.0700E+02	3.0149E+00	9.81850E-04	5.53500E-05	5.82291E-01
4.0900E+02	2.9853E+00	9.09250E-04	5.32900E-05	5.84109E-01
4.1100E+02	2.9562E+00	7.61350E-04	4.88270E-05	5.85632E-01
4.1300E+02	2.9275E+00	6.62100E-04	4.55380E-05	5.86956E-01
4.1500E+02	2.8992E+00	6.98600E-04	4.68045E-05	5.88353E-01
4.1700E+02	2.8714E+00	6.50400E-04	4.51910E-05	5.89654E-01
4.1900E+02	2.8439E+00	5.48350E-04	4.15670E-05	5.90751E-01
4.2100E+02	2.8168E+00	4.94525E-04	3.95215E-05	5.91740E-01
4.2300E+02	2.7901E+00	5.72750E-04	4.24620E-05	5.92885E-01
4.2500E+02	2.7638E+00	6.59150E-04	4.54880E-05	5.94204E-01
4.2700E+02	2.7379E+00	5.73950E-04	4.25050E-05	5.95352E-01
4.2900E+02	2.7123E+00	6.61600E-04	4.55710E-05	5.96675E-01
4.3100E+02	2.6871E+00	7.03500E-04	4.69660E-05	5.98082E-01
4.3300E+02	2.6622E+00	8.12200E-04	5.04050E-05	5.99706E-01
4.3500E+02	2.6377E+00	7.27150E-04	4.77355E-05	6.01160E-01
4.3700E+02	2.6135E+00	8.14550E-04	5.04750E-05	6.02790E-01
4.3900E+02	2.5896E+00	7.59350E-04	4.87640E-05	6.04308E-01
4.4100E+02	2.5661E+00	8.16600E-04	5.05400E-05	6.05941E-01
4.4300E+02	2.5429E+00	7.68800E-04	4.90615E-05	6.07479E-01
4.4500E+02	2.5200E+00	8.25250E-04	5.08000E-05	6.09130E-01
4.4700E+02	2.4974E+00	7.67750E-04	4.90280E-05	6.10665E-01
4.4900E+02	2.4751E+00	7.53650E-04	4.85825E-05	6.12172E-01
4.5100E+02	2.4531E+00	7.80100E-04	4.94145E-05	6.13733E-01
4.5300E+02	2.4314E+00	8.69900E-04	5.21400E-05	6.15472E-01
4.5500E+02	2.4100E+00	7.94800E-04	4.98705E-05	6.17062E-01
4.5700E+02	2.3889E+00	7.09450E-04	4.71615E-05	6.18481E-01
4.5900E+02	2.3680E+00	6.97700E-04	4.67750E-05	6.19876E-01
4.6100E+02	2.3475E+00	8.30650E-04	5.09650E-05	6.21538E-01
4.6300E+02	2.3271E+00	7.28600E-04	4.77815E-05	6.22995E-01
4.6500E+02	2.3071E+00	7.53400E-04	4.85755E-05	6.24502E-01
4.6700E+02	2.2873E+00	6.76150E-04	4.60595E-05	6.25854E-01

4.6900E+02	2.2678E+00	6.73000E-04	4.59550E-05	6.27200E-01
4.7100E+02	2.2485E+00	6.73850E-04	4.59835E-05	6.28548E-01
4.7300E+02	2.2294E+00	6.37050E-04	4.47335E-05	6.29822E-01
4.7500E+02	2.2106E+00	6.47000E-04	4.50745E-05	6.31116E-01
4.7700E+02	2.1921E+00	6.19500E-04	4.41245E-05	6.32355E-01
4.7900E+02	2.1737E+00	6.29200E-04	4.44620E-05	6.33613E-01
4.8100E+02	2.1556E+00	5.83350E-04	4.28440E-05	6.34780E-01
4.8300E+02	2.1378E+00	6.26800E-04	4.43795E-05	6.36033E-01
4.8500E+02	2.1201E+00	6.24500E-04	4.42995E-05	6.37282E-01
4.8700E+02	2.1027E+00	5.53150E-04	4.17440E-05	6.38389E-01
4.8900E+02	2.0855E+00	5.04100E-04	3.98935E-05	6.39397E-01
4.9100E+02	2.0684E+00	4.38360E-04	3.72680E-05	6.40274E-01
4.9300E+02	2.0516E+00	5.47950E-04	4.15515E-05	6.41369E-01
4.9500E+02	2.0350E+00	4.89075E-04	3.93085E-05	6.42348E-01
4.9700E+02	2.0186E+00	4.75630E-04	3.87780E-05	6.43299E-01
4.9900E+02	2.0024E+00	5.10500E-04	4.01390E-05	6.44320E-01
5.0100E+02	1.9864E+00	4.39295E-04	3.73065E-05	6.45198E-01
5.0300E+02	1.9706E+00	4.34175E-04	3.70945E-05	6.46067E-01
5.0500E+02	1.9550E+00	4.61670E-04	3.82195E-05	6.46990E-01
5.0700E+02	1.9396E+00	4.93670E-04	3.94880E-05	6.47977E-01
5.0900E+02	1.9243E+00	4.35550E-04	3.71520E-05	6.48849E-01

Nitrogen 1.1 m. f. p.

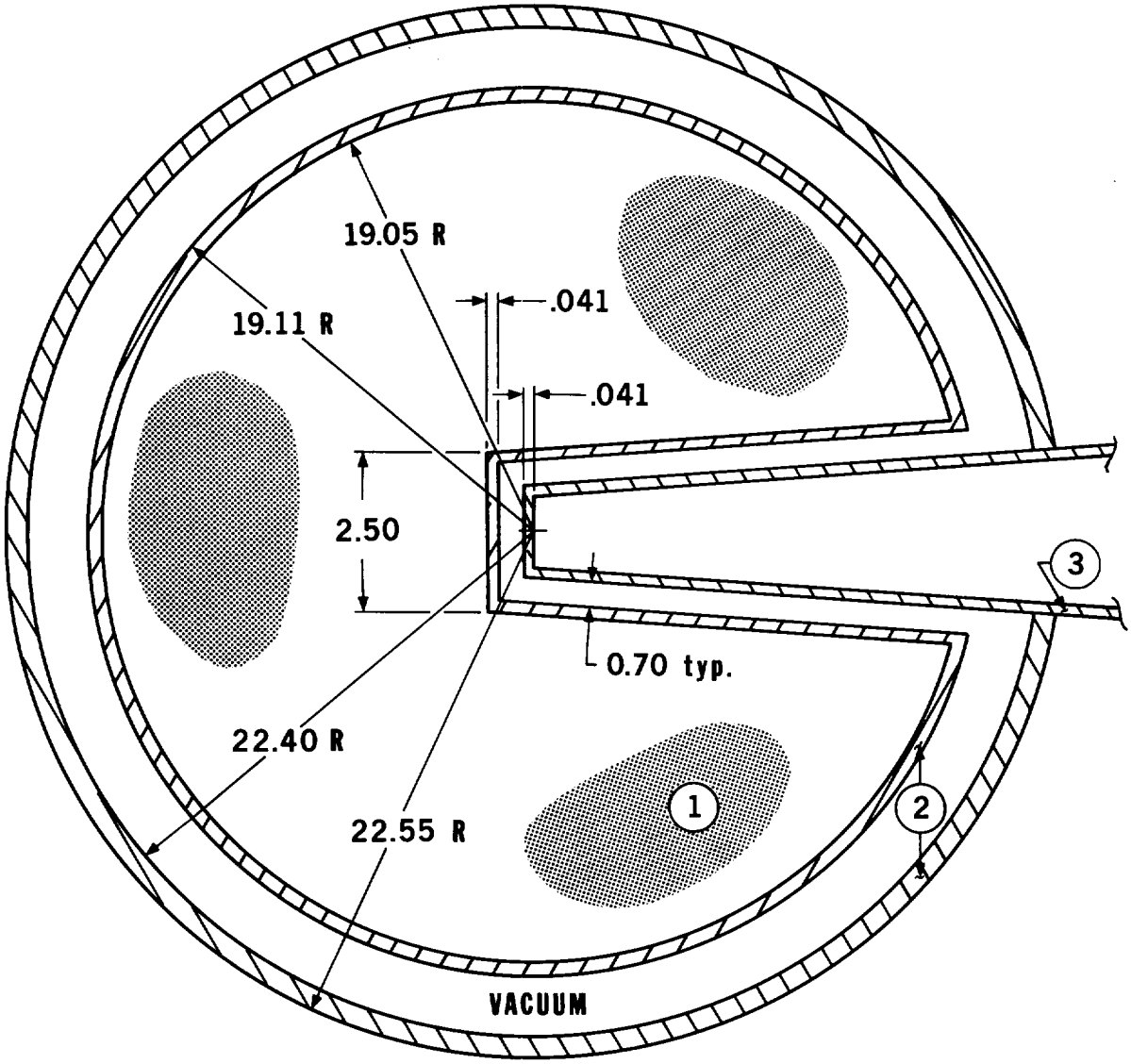

All Dimensions in Centimeters

Zone	Density (g/cm^3)	Material	Atomic %
1	0.808	Liquid N_2	100.0
2	7.9	Fe	68.6
		Cr	20.0
		Ni	8.4
		Si	2.0
		Mn	1.0
3	I.C.T. Low Mass Ass'y and Target (See Fig.6, Sect. 1)		

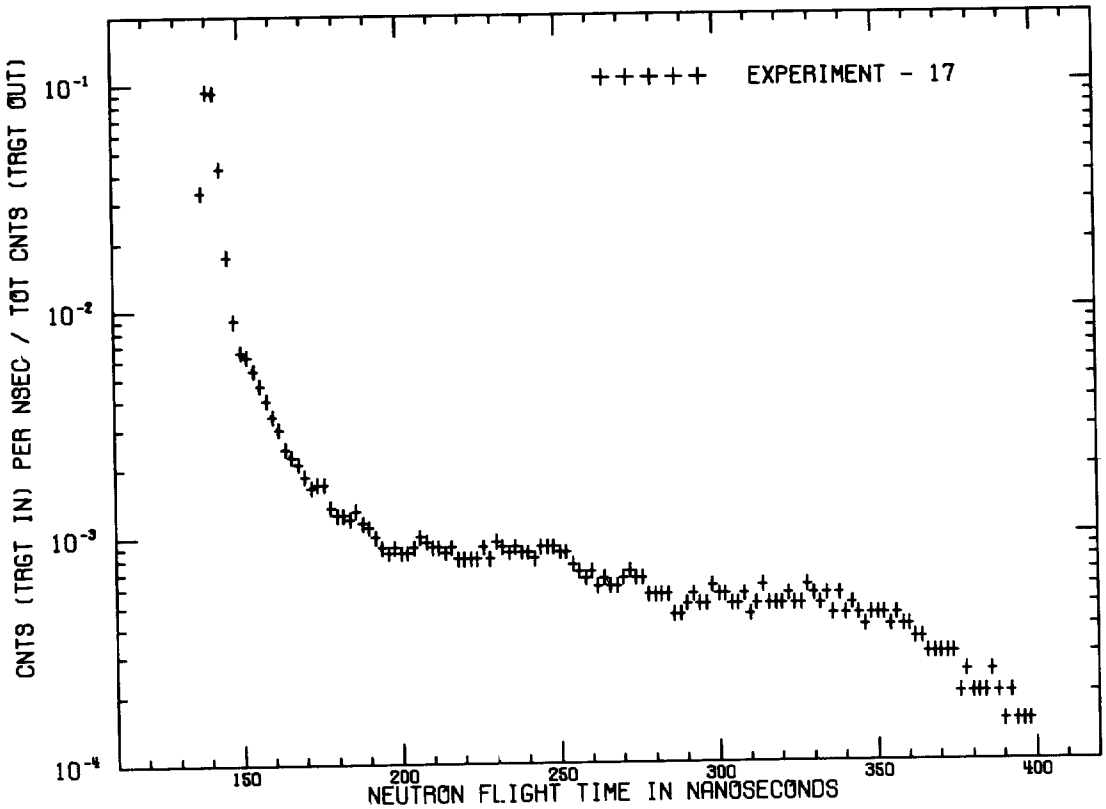

NITROGEN - 1.1 M.F.P. - 30 DEG.

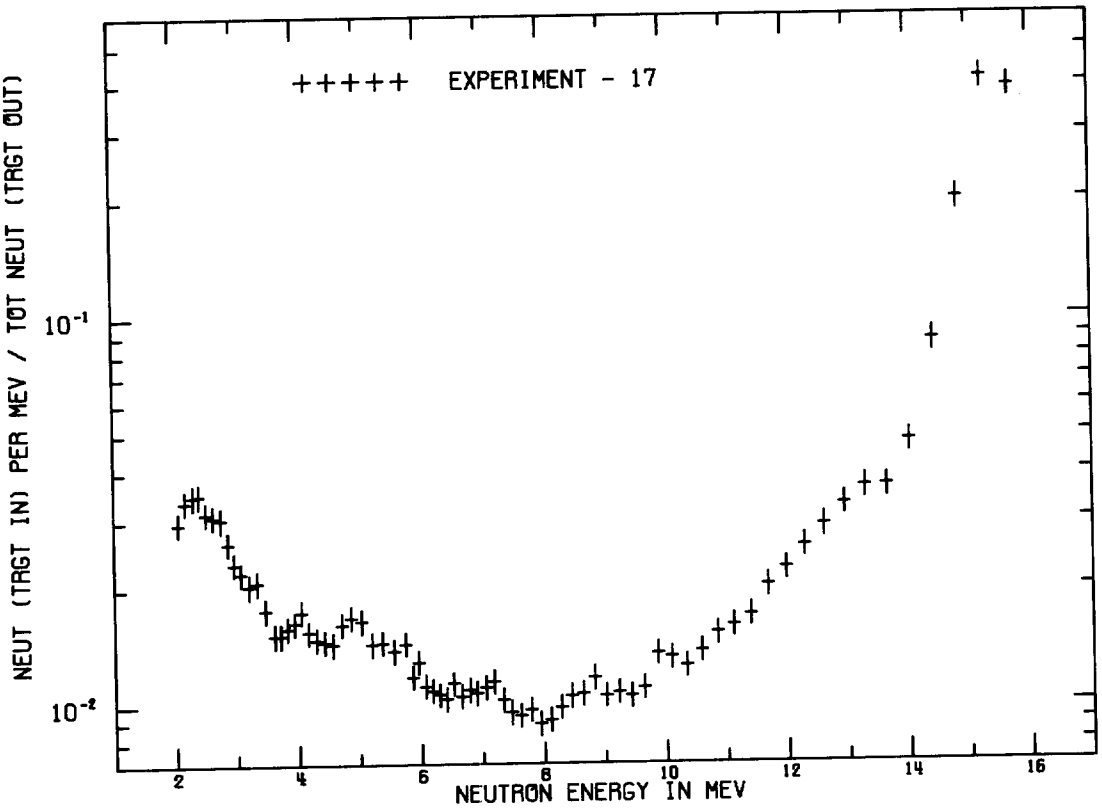

NITROGEN - 1.1 M.F.P. - 30 DEG.

NITROGEN - 1.1 M.F.P. - 30 DEG.
FLIGHTPATH = 763.30 CM DETECTOR = PILOT B FWHM = 5 NS

TIME(NS)	CALCULATED ENERGY(MEV)	CNT/NS/SOURCE	ERROR	INTEGRAL
1.3700E+02	1.6656E+01	3.65000E-03	5.00000E-06	7.30000E-03
1.3900E+02	1.6168E+01	3.33000E-02	5.00000E-05	7.39000E-02
1.4100E+02	1.5701E+01	9.32500E-02	5.00000E-05	2.60400E-01
1.4300E+02	1.5254E+01	9.27500E-02	5.00000E-05	4.45900E-01
1.4500E+02	1.4826E+01	4.26000E-02	5.00000E-05	5.31100E-01
1.4700E+02	1.4416E+01	1.74000E-02	2.50000E-05	5.65900E-01
1.4900E+02	1.4023E+01	9.05000E-03	2.50000E-05	5.84000E-01
1.5100E+02	1.3646E+01	6.55000E-03	2.50000E-05	5.97100E-01
1.5300E+02	1.3284E+01	6.25000E-03	2.50000E-05	6.09600E-01
1.5500E+02	1.2936E+01	5.45000E-03	2.50000E-05	6.20500E-01
1.5700E+02	1.2602E+01	4.65000E-03	2.50000E-05	6.29800E-01
1.5900E+02	1.2281E+01	4.00000E-03	2.50000E-05	6.37800E-01
1.6100E+02	1.1972E+01	3.40000E-03	2.50000E-05	6.44600E-01
1.6300E+02	1.1675E+01	3.00000E-03	2.50000E-05	6.50600E-01
1.6500E+02	1.1388E+01	2.45000E-03	2.50000E-05	6.55500E-01
1.6700E+02	1.1112E+01	2.25000E-03	2.50000E-05	6.60000E-01
1.6900E+02	1.0846E+01	2.10000E-03	2.50000E-05	6.64200E-01
1.7100E+02	1.0590E+01	1.85000E-03	2.50000E-05	6.67900E-01
1.7300E+02	1.0342E+01	1.65000E-03	2.50000E-05	6.71200E-01
1.7500E+02	1.0103E+01	1.70000E-03	2.50000E-05	6.74600E-01
1.7700E+02	9.8727E+00	1.70000E-03	2.50000E-05	6.78000E-01
1.7900E+02	9.6499E+00	1.35000E-03	2.50000E-05	6.80700E-01
1.8100E+02	9.4346E+00	1.25000E-03	2.50000E-05	6.83200E-01
1.8300E+02	9.2265E+00	1.25000E-03	5.00000E-06	6.85700E-01
1.8500E+02	9.0252E+00	1.20000E-03	5.00000E-06	6.88100E-01
1.8700E+02	8.8305E+00	1.30000E-03	5.00000E-06	6.90700E-01
1.8900E+02	8.6420E+00	1.15000E-03	5.00000E-06	6.93000E-01
1.9100E+02	8.4595E+00	1.10000E-03	5.00000E-06	6.95200E-01
1.9300E+02	8.2828E+00	1.00000E-03	5.00000E-06	6.97200E-01
1.9500E+02	8.1116E+00	9.00000E-04	5.00000E-06	6.99000E-01
1.9700E+02	7.9456E+00	8.50000E-04	5.00000E-06	7.00700E-01
1.9900E+02	7.7847E+00	9.00000E-04	5.00000E-06	7.02500E-01
2.0100E+02	7.6287E+00	8.50000E-04	5.00000E-06	7.04200E-01
2.0300E+02	7.4773E+00	8.50000E-04	5.00000E-06	7.05900E-01
2.0500E+02	7.3304E+00	9.00000E-04	5.00000E-06	7.07700E-01
2.0700E+02	7.1878E+00	1.00000E-03	5.00000E-06	7.09700E-01
2.0900E+02	7.0494E+00	9.50000E-04	5.00000E-06	7.11600E-01
2.1100E+02	6.9149E+00	9.00000E-04	5.00000E-06	7.13400E-01
2.1300E+02	6.7843E+00	9.00000E-04	5.00000E-06	7.15200E-01
2.1500E+02	6.6573E+00	8.50000E-04	5.00000E-06	7.16900E-01
2.1700E+02	6.5339E+00	9.00000E-04	5.00000E-06	7.18700E-01
2.1900E+02	6.4138E+00	8.00000E-04	5.00000E-06	7.20300E-01
2.2100E+02	6.2971E+00	8.00000E-04	5.00000E-06	7.21900E-01
2.2300E+02	6.1836E+00	8.00000E-04	5.00000E-06	7.23500E-01
2.2500E+02	6.0731E+00	8.00000E-04	5.00000E-06	7.25100E-01

2.2700E+02	5.9655E+00	9.00000E-04	5.00000E-06	7.26900E-01
2.2900E+02	5.8608E+00	8.00000E-04	5.00000E-06	7.28500E-01
2.3100E+02	5.7588E+00	9.50000E-04	5.00000E-06	7.30400E-01
2.3300E+02	5.6595E+00	9.00000E-04	5.00000E-06	7.32200E-01
2.3500E+02	5.5627E+00	8.50000E-04	5.00000E-06	7.33900E-01
2.3700E+02	5.4684E+00	9.00000E-04	5.00000E-06	7.35700E-01
2.3900E+02	5.3765E+00	8.50000E-04	5.00000E-06	7.37400E-01
2.4100E+02	5.2868E+00	8.50000E-04	5.00000E-06	7.39100E-01
2.4300E+02	5.1995E+00	8.00000E-04	5.00000E-06	7.40700E-01
2.4500E+02	5.1142E+00	9.00000E-04	5.00000E-06	7.42500E-01
2.4700E+02	5.0311E+00	9.00000E-04	5.00000E-06	7.44300E-01
2.4900E+02	4.9499E+00	9.00000E-04	5.00000E-06	7.46100E-01
2.5100E+02	4.8708E+00	8.50000E-04	5.00000E-06	7.47800E-01
2.5300E+02	4.7935E+00	8.50000E-04	5.00000E-06	7.49500E-01
2.5500E+02	4.7180E+00	7.50000E-04	5.00000E-06	7.51000E-01
2.5700E+02	4.6443E+00	7.00000E-04	5.00000E-06	7.52400E-01
2.5900E+02	4.5723E+00	6.50000E-04	5.00000E-06	7.53700E-01
2.6100E+02	4.5020E+00	7.00000E-04	5.00000E-06	7.55100E-01
2.6300E+02	4.4333E+00	6.00000E-04	5.00000E-06	7.56300E-01
2.6500E+02	4.3662E+00	6.50000E-04	5.00000E-06	7.57600E-01
2.6700E+02	4.3006E+00	6.00000E-04	5.00000E-06	7.58800E-01
2.6900E+02	4.2365E+00	6.00000E-04	5.00000E-06	7.60000E-01
2.7100E+02	4.1737E+00	6.50000E-04	5.00000E-06	7.61300E-01
2.7300E+02	4.1124E+00	7.00000E-04	5.00000E-06	7.62700E-01
2.7500E+02	4.0524E+00	6.50000E-04	5.00000E-06	7.64000E-01
2.7700E+02	3.9937E+00	6.50000E-04	5.00000E-06	7.65300E-01
2.7900E+02	3.9363E+00	5.50000E-04	5.00000E-06	7.66400E-01
2.8100E+02	3.8801E+00	5.50000E-04	5.00000E-06	7.67500E-01
2.8300E+02	3.8252E+00	5.50000E-04	5.00000E-06	7.68600E-01
2.8500E+02	3.7713E+00	5.50000E-04	5.00000E-06	7.69700E-01
2.8700E+02	3.7187E+00	4.50000E-04	5.00000E-06	7.70600E-01
2.8900E+02	3.6671E+00	4.50000E-04	5.00000E-06	7.71500E-01
2.9100E+02	3.6165E+00	5.00000E-04	5.00000E-06	7.72500E-01
2.9300E+02	3.5671E+00	5.50000E-04	5.00000E-06	7.73600E-01
2.9500E+02	3.5186E+00	5.00000E-04	5.00000E-06	7.74600E-01
2.9700E+02	3.4711E+00	5.00000E-04	5.00000E-06	7.75600E-01
2.9900E+02	3.4246E+00	6.00000E-04	5.00000E-06	7.76800E-01
3.0100E+02	3.3790E+00	5.50000E-04	5.00000E-06	7.77900E-01
3.0300E+02	3.3343E+00	5.50000E-04	5.00000E-06	7.79000E-01
3.0500E+02	3.2904E+00	5.00000E-04	5.00000E-06	7.80000E-01
3.0700E+02	3.2475E+00	5.00000E-04	5.00000E-06	7.81000E-01
3.0900E+02	3.2054E+00	5.50000E-04	5.00000E-06	7.82100E-01
3.1100E+02	3.1641E+00	4.50000E-04	5.00000E-06	7.83000E-01
3.1300E+02	3.1236E+00	5.00000E-04	5.00000E-06	7.84000E-01
3.1500E+02	3.0838E+00	6.00000E-04	5.00000E-06	7.85200E-01
3.1700E+02	3.0448E+00	5.00000E-04	5.00000E-06	7.86200E-01
3.1900E+02	3.0066E+00	5.00000E-04	5.00000E-06	7.87200E-01
3.2100E+02	2.9691E+00	5.00000E-04	5.00000E-06	7.88200E-01

3.2300E+02	2.9323E+00	5.50000E-04	5.00000E-06	7.89300E-01
3.2500E+02	2.8961E+00	5.00000E-04	5.00000E-06	7.90300E-01
3.2700E+02	2.8606E+00	5.00000E-04	5.00000E-06	7.91300E-01
3.2900E+02	2.8258E+00	6.00000E-04	5.00000E-06	7.92500E-01
3.3100E+02	2.7916E+00	5.50000E-04	5.00000E-06	7.93600E-01
3.3300E+02	2.7580E+00	5.00000E-04	5.00000E-06	7.94600E-01
3.3500E+02	2.7250E+00	5.50000E-04	5.00000E-06	7.95700E-01
3.3700E+02	2.6927E+00	4.50000E-04	5.00000E-06	7.96600E-01
3.3900E+02	2.6608E+00	5.50000E-04	5.00000E-06	7.97700E-01
3.4100E+02	2.6296E+00	4.50000E-04	5.00000E-06	7.98600E-01
3.4300E+02	2.5989E+00	5.00000E-04	5.00000E-06	7.99600E-01
3.4500E+02	2.5687E+00	4.50000E-04	5.00000E-06	8.00500E-01
3.4700E+02	2.5391E+00	4.00000E-04	5.00000E-06	8.01300E-01
3.4900E+02	2.5099E+00	4.50000E-04	5.00000E-06	8.02200E-01
3.5100E+02	2.4813E+00	4.50000E-04	5.00000E-06	8.03100E-01
3.5300E+02	2.4532E+00	4.50000E-04	5.00000E-06	8.04000E-01
3.5500E+02	2.4255E+00	4.00000E-04	5.00000E-06	8.04800E-01
3.5700E+02	2.3983E+00	4.50000E-04	5.00000E-06	8.05700E-01
3.5900E+02	2.3715E+00	4.00000E-04	5.00000E-06	8.06500E-01
3.6100E+02	2.3452E+00	4.00000E-04	5.00000E-06	8.07300E-01
3.6300E+02	2.3194E+00	3.50000E-04	5.00000E-06	8.08000E-01
3.6500E+02	2.2939E+00	3.50000E-04	5.00000E-06	8.08700E-01
3.6700E+02	2.2689E+00	3.00000E-04	5.00000E-06	8.09300E-01
3.6900E+02	2.2443E+00	3.00000E-04	5.00000E-06	8.09900E-01
3.7100E+02	2.2201E+00	3.00000E-04	5.00000E-06	8.10500E-01
3.7300E+02	2.1962E+00	3.00000E-04	5.00000E-06	8.11100E-01
3.7500E+02	2.1728E+00	3.00000E-04	5.00000E-06	8.11700E-01
3.7700E+02	2.1497E+00	2.00000E-04	5.00000E-06	8.12100E-01
3.7900E+02	2.1270E+00	2.50000E-04	5.00000E-06	8.12600E-01
3.8100E+02	2.1047E+00	2.00000E-04	5.00000E-06	8.13000E-01
3.8300E+02	2.0827E+00	2.00000E-04	5.00000E-06	8.13400E-01
3.8500E+02	2.0610E+00	2.00000E-04	5.00000E-06	8.13800E-01
3.8700E+02	2.0397E+00	2.50000E-04	5.00000E-06	8.14300E-01
3.8900E+02	2.0187E+00	2.00000E-04	5.00000E-06	8.14700E-01
3.9100E+02	1.9981E+00	1.50000E-04	5.00000E-06	8.15000E-01
3.9300E+02	1.9777E+00	2.00000E-04	5.00000E-06	8.15400E-01
3.9500E+02	1.9577E+00	1.50000E-04	5.00000E-06	8.15700E-01
3.9700E+02	1.9379E+00	1.50000E-04	5.00000E-06	8.16000E-01
3.9900E+02	1.9185E+00	1.50000E-04	5.00000E-06	8.16300E-01

Nitrogen 3.1 m. f. p.

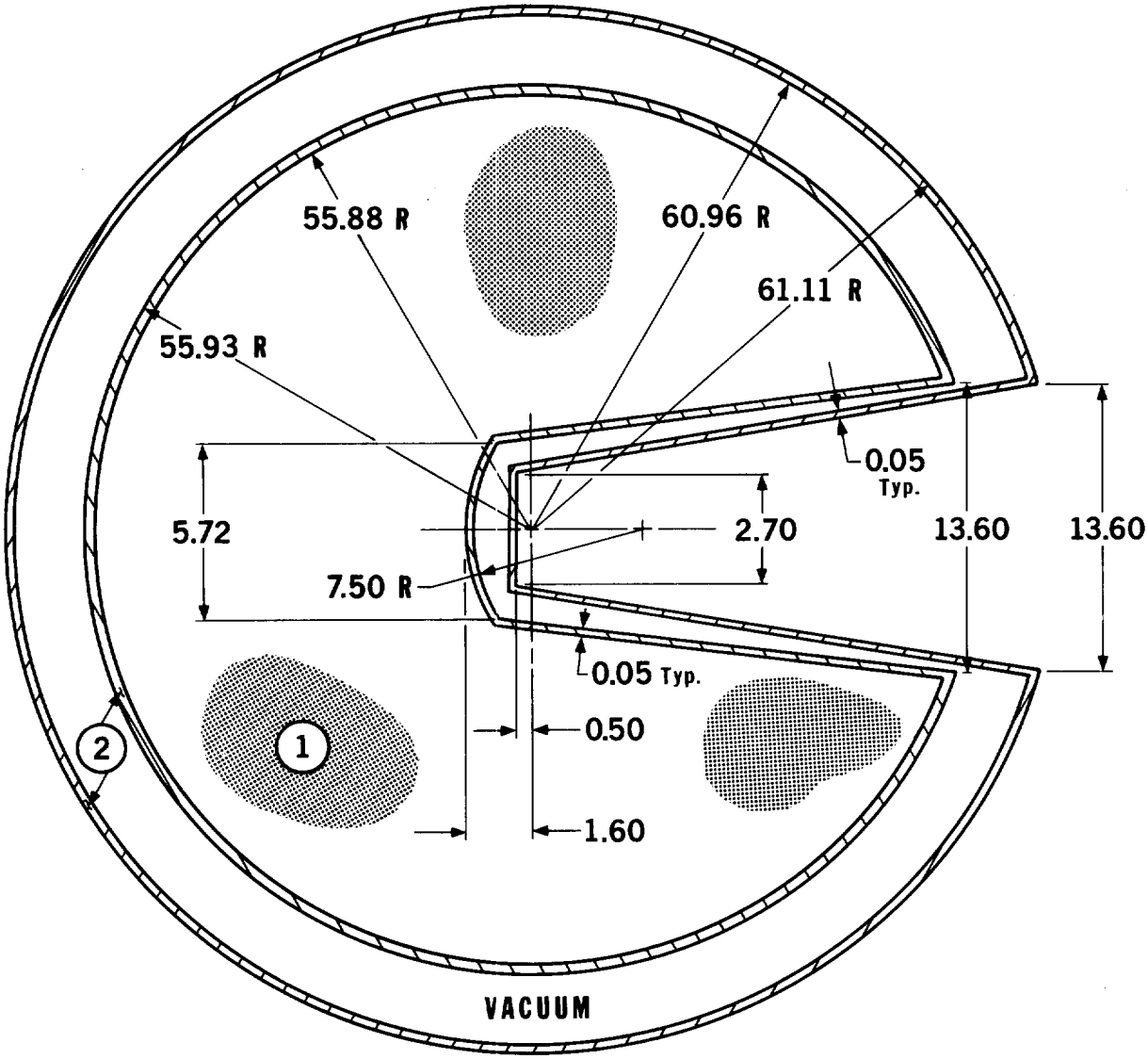

All Dimensions in Centimeters

Zone	Density (g/cm^3)	Material	Atomic %
1	0.808	Liquid N_2	100.0
2	7.9	Fe	68.6
		Cr	20.0
		Ni	8.4
		Si	2.0
		Mn	1.0

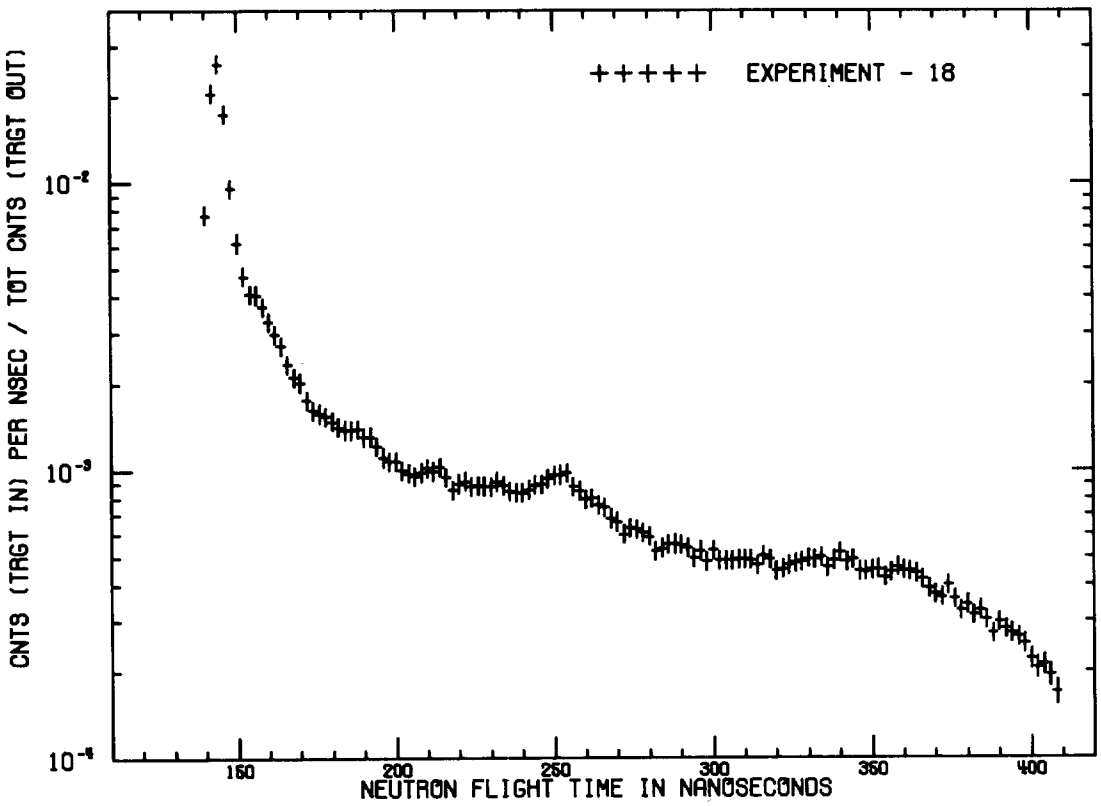

NITROGEN - 3.1 M.F.P. - 30 DEG.

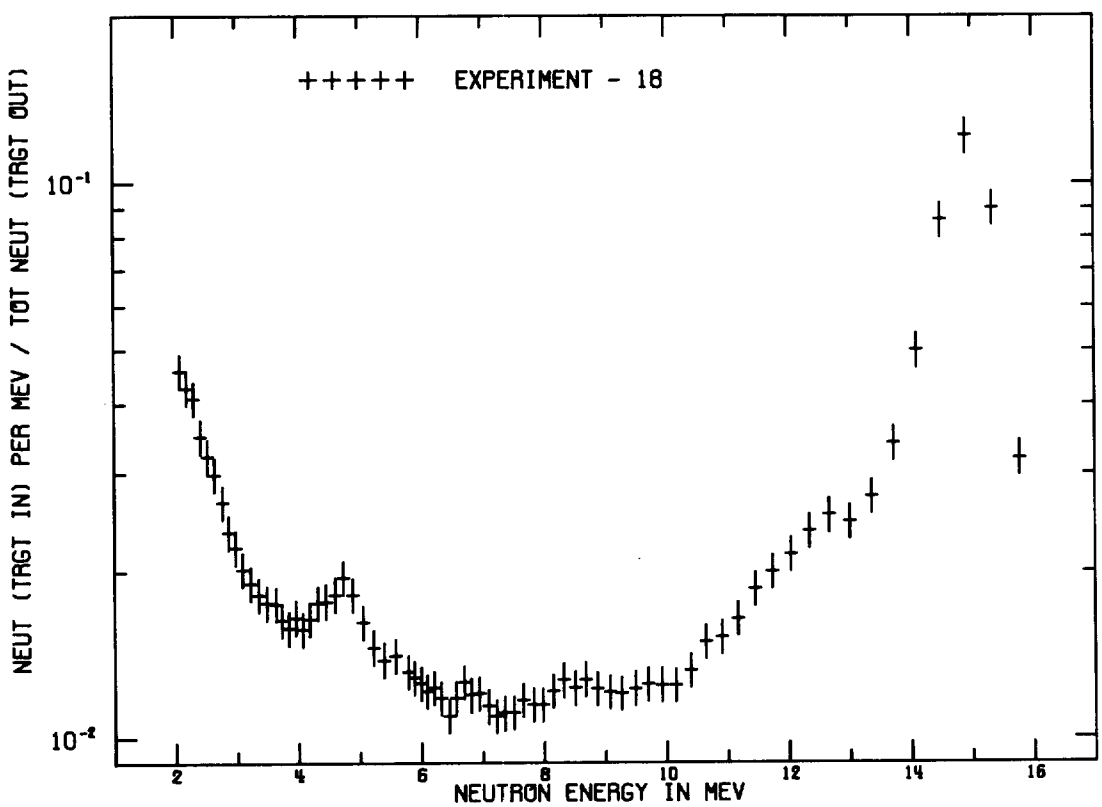

NITROGEN - 3.1 M.F.P. - 30 DEG.

NITROGEN - 3.1 M.F.P. - 30 DEG.
FLIGHTPATH = 765.20 CM DETECTOR = PILOT B FWHM = 4 NS

TIME(NS)	CALCULATED ENERGY(MEV)	CNT/NS/SOURCE	ERROR	INTEGRAL
1.3900E+02	1.6250E+01	9.51900E-04	2.99445E-05	1.90380E-03
1.4100E+02	1.5781E+01	7.70000E-03	7.94150E-05	1.73038E-02
1.4300E+02	1.5332E+01	2.04795E-02	1.28660E-04	5.82628E-02
1.4500E+02	1.4902E+01	2.60570E-02	1.45000E-04	1.10377E-01
1.4700E+02	1.4490E+01	1.73575E-02	1.18530E-04	1.45092E-01
1.4900E+02	1.4095E+01	9.56050E-03	8.83100E-05	1.64213E-01
1.5100E+02	1.3716E+01	6.16000E-03	7.12200E-05	1.76533E-01
1.5300E+02	1.3352E+01	4.71920E-03	6.25850E-05	1.85971E-01
1.5500E+02	1.3002E+01	4.08970E-03	5.84150E-05	1.94151E-01
1.5700E+02	1.2666E+01	4.06495E-03	5.82450E-05	2.02280E-01
1.5900E+02	1.2343E+01	3.69335E-03	5.56300E-05	2.09667E-01
1.6100E+02	1.2033E+01	3.26535E-03	5.24550E-05	2.16198E-01
1.6300E+02	1.1734E+01	2.96240E-03	5.00850E-05	2.22123E-01
1.6500E+02	1.1446E+01	2.69255E-03	4.78770E-05	2.27508E-01
1.6700E+02	1.1169E+01	2.32045E-03	4.46530E-05	2.32149E-01
1.6900E+02	1.0901E+01	2.09960E-03	4.26240E-05	2.36348E-01
1.7100E+02	1.0643E+01	2.01375E-03	4.18090E-05	2.40375E-01
1.7300E+02	1.0395E+01	1.74430E-03	3.91405E-05	2.43864E-01
1.7500E+02	1.0154E+01	1.60560E-03	3.76930E-05	2.47075E-01
1.7700E+02	9.9227E+00	1.57055E-03	3.73185E-05	2.50216E-01
1.7900E+02	9.6987E+00	1.53840E-03	3.69715E-05	2.53293E-01
1.8100E+02	9.4824E+00	1.47370E-03	3.62630E-05	2.56240E-01
1.8300E+02	9.2732E+00	1.40770E-03	3.55260E-05	2.59056E-01
1.8500E+02	9.0708E+00	1.38115E-03	3.52250E-05	2.61818E-01
1.8700E+02	8.8751E+00	1.37100E-03	3.51090E-05	2.64560E-01
1.8900E+02	8.6857E+00	1.38875E-03	3.53115E-05	2.67338E-01
1.9100E+02	8.5023E+00	1.29980E-03	3.42870E-05	2.69937E-01
1.9300E+02	8.3246E+00	1.30525E-03	3.43505E-05	2.72548E-01
1.9500E+02	8.1525E+00	1.20630E-03	3.31755E-05	2.74960E-01
1.9700E+02	7.9857E+00	1.10500E-03	3.19280E-05	2.77170E-01
1.9900E+02	7.8240E+00	1.07220E-03	3.15140E-05	2.79315E-01
2.0100E+02	7.6672E+00	1.06840E-03	3.14655E-05	2.81452E-01
2.0300E+02	7.5150E+00	9.92250E-04	3.04795E-05	2.83436E-01
2.0500E+02	7.3674E+00	9.72600E-04	3.02205E-05	2.85381E-01
2.0700E+02	7.2241E+00	9.52650E-04	2.99545E-05	2.87287E-01
2.0900E+02	7.0849E+00	9.80200E-04	3.03205E-05	2.89247E-01
2.1100E+02	6.9498E+00	1.01455E-03	3.07715E-05	2.91276E-01
2.1300E+02	6.8184E+00	9.90050E-04	3.04505E-05	2.93256E-01
2.1500E+02	6.6908E+00	1.02495E-03	3.09065E-05	2.95306E-01
2.1700E+02	6.5668E+00	9.40900E-04	2.97965E-05	2.97188E-01
2.1900E+02	6.4461E+00	8.50050E-04	2.85480E-05	2.98888E-01
2.2100E+02	6.3288E+00	8.94550E-04	2.91665E-05	3.00677E-01
2.2300E+02	6.2147E+00	9.12400E-04	2.94110E-05	3.02502E-01
2.2500E+02	6.1036E+00	8.76150E-04	2.89125E-05	3.04254E-01
2.2700E+02	5.9955E+00	8.80650E-04	2.89750E-05	3.06015E-01

2.2900E+02	5.8903E+00	8.77500E-04	2.89500E-05	3.07770E-01
2.3100E+02	5.7878E+00	8.75000E-04	2.88965E-05	3.09520E-01
2.3300E+02	5.6879E+00	9.10450E-04	2.93845E-05	3.11341E-01
2.3500E+02	5.5907E+00	8.84750E-04	2.90315E-05	3.13111E-01
2.3700E+02	5.4959E+00	8.44550E-04	2.84710E-05	3.14800E-01
2.3900E+02	5.4035E+00	8.34600E-04	2.83305E-05	3.16469E-01
2.4100E+02	5.3134E+00	8.31850E-04	2.82915E-05	3.18133E-01
2.4300E+02	5.2256E+00	8.53150E-04	2.85920E-05	3.19839E-01
2.4500E+02	5.1399E+00	8.87350E-04	2.90675E-05	3.21614E-01
2.4700E+02	5.0564E+00	8.88700E-04	2.90860E-05	3.23391E-01
2.4900E+02	4.9748E+00	9.33450E-04	2.96960E-05	3.25258E-01
2.5100E+02	4.8952E+00	9.57750E-04	3.00225E-05	3.27174E-01
2.5300E+02	4.8175E+00	9.62100E-04	3.00800E-05	3.29098E-01
2.5500E+02	4.7417E+00	9.75500E-04	3.02590E-05	3.31049E-01
2.5700E+02	4.6676E+00	8.73650E-04	2.88780E-05	3.32796E-01
2.5900E+02	4.5953E+00	8.45600E-04	2.84860E-05	3.34487E-01
2.6100E+02	4.5246E+00	7.88800E-04	2.76745E-05	3.36065E-01
2.6300E+02	4.4556E+00	7.96900E-04	2.77920E-05	3.37659E-01
2.6500E+02	4.3881E+00	7.55100E-04	2.71825E-05	3.39169E-01
2.6700E+02	4.3222E+00	7.40150E-04	2.69610E-05	3.40649E-01
2.6900E+02	4.2577E+00	6.77600E-04	2.60140E-05	3.42004E-01
2.7100E+02	4.1947E+00	6.58850E-04	2.57235E-05	3.43322E-01
2.7300E+02	4.1330E+00	5.96800E-04	2.47380E-05	3.44516E-01
2.7500E+02	4.0728E+00	6.26900E-04	2.52210E-05	3.45770E-01
2.7700E+02	4.0138E+00	6.21200E-04	2.51300E-05	3.47012E-01
2.7900E+02	3.9561E+00	6.03350E-04	2.48440E-05	3.48219E-01
2.8100E+02	3.8996E+00	5.85700E-04	2.45570E-05	3.49390E-01
2.8300E+02	3.8443E+00	5.21050E-04	2.34780E-05	3.50432E-01
2.8500E+02	3.7903E+00	5.33750E-04	2.36940E-05	3.51500E-01
2.8700E+02	3.7373E+00	5.52050E-04	2.40015E-05	3.52604E-01
2.8900E+02	3.6854E+00	5.53300E-04	2.40225E-05	3.53710E-01
2.9100E+02	3.6347E+00	5.48800E-04	2.39470E-05	3.54808E-01
2.9300E+02	3.5849E+00	5.35850E-04	2.37295E-05	3.55880E-01
2.9500E+02	3.5362E+00	4.92910E-04	2.29925E-05	3.56866E-01
2.9700E+02	3.4885E+00	5.23150E-04	2.35140E-05	3.57912E-01
2.9900E+02	3.4417E+00	4.79485E-04	2.27575E-05	3.58871E-01
3.0100E+02	3.3959E+00	5.26950E-04	2.35785E-05	3.59925E-01
3.0300E+02	3.3510E+00	4.83245E-04	2.28235E-05	3.60891E-01
3.0500E+02	3.3069E+00	4.84415E-04	2.28440E-05	3.61860E-01
3.0700E+02	3.2638E+00	4.83095E-04	2.28210E-05	3.62826E-01
3.0900E+02	3.2214E+00	4.88225E-04	2.29110E-05	3.63803E-01
3.1100E+02	3.1799E+00	4.88575E-04	2.29170E-05	3.64780E-01
3.1300E+02	3.1392E+00	4.87045E-04	2.28900E-05	3.65754E-01
3.1500E+02	3.0993E+00	4.65225E-04	2.25050E-05	3.66684E-01
3.1700E+02	3.0601E+00	5.03750E-04	2.31810E-05	3.67692E-01
3.1900E+02	3.0217E+00	4.88820E-04	2.29215E-05	3.68669E-01
3.2100E+02	2.9840E+00	4.46830E-04	2.21750E-05	3.69563E-01
3.2300E+02	2.9469E+00	4.52225E-04	2.22720E-05	3.70468E-01

3.2500E+02	2.9106E+00	4.67225E-04	2.25405E-05	3.71402E-01
3.2700E+02	2.8750E+00	4.75030E-04	2.26790E-05	3.72352E-01
3.2900E+02	2.8399E+00	4.78550E-04	2.27410E-05	3.73309E-01
3.3100E+02	2.8056E+00	4.91570E-04	2.29695E-05	3.74292E-01
3.3300E+02	2.7718E+00	4.87365E-04	2.28960E-05	3.75267E-01
3.3500E+02	2.7387E+00	4.98070E-04	2.30825E-05	3.76263E-01
3.3700E+02	2.7061E+00	4.57140E-04	2.23605E-05	3.77177E-01
3.3900E+02	2.6742E+00	4.86445E-04	2.28800E-05	3.78150E-01
3.4100E+02	2.6428E+00	5.15500E-04	2.33830E-05	3.79181E-01
3.4300E+02	2.6119E+00	4.81145E-04	2.27870E-05	3.80144E-01
3.4500E+02	2.5816E+00	4.89915E-04	2.29405E-05	3.81123E-01
3.4700E+02	2.5518E+00	4.44320E-04	2.21295E-05	3.82012E-01
3.4900E+02	2.5225E+00	4.44205E-04	2.21275E-05	3.82901E-01
3.5100E+02	2.4937E+00	4.48605E-04	2.22070E-05	3.83798E-01
3.5300E+02	2.4654E+00	4.52040E-04	2.22690E-05	3.84702E-01
3.5500E+02	2.4376E+00	4.23950E-04	2.17575E-05	3.85550E-01
3.5700E+02	2.4103E+00	4.41215E-04	2.20730E-05	3.86432E-01
3.5900E+02	2.3834E+00	4.60940E-04	2.24285E-05	3.87354E-01
3.6100E+02	2.3570E+00	4.48195E-04	2.21995E-05	3.88250E-01
3.6300E+02	2.3310E+00	4.44745E-04	2.21370E-05	3.89140E-01
3.6500E+02	2.3054E+00	4.37260E-04	2.20010E-05	3.90014E-01
3.6700E+02	2.2803E+00	4.17455E-04	2.16375E-05	3.90849E-01
3.6900E+02	2.2555E+00	3.88850E-04	2.11005E-05	3.91627E-01
3.7100E+02	2.2312E+00	3.70760E-04	2.07540E-05	3.92369E-01
3.7300E+02	2.2072E+00	3.62540E-04	2.05950E-05	3.93094E-01
3.7500E+02	2.1837E+00	3.98215E-04	2.12780E-05	3.93890E-01
3.7700E+02	2.1605E+00	3.57555E-04	2.04975E-05	3.94605E-01
3.7900E+02	2.1377E+00	3.24985E-04	1.98505E-05	3.95255E-01
3.8100E+02	2.1152E+00	3.42015E-04	2.01915E-05	3.95939E-01
3.8300E+02	2.0931E+00	3.13190E-04	1.96105E-05	3.96566E-01
3.8500E+02	2.0713E+00	3.26635E-04	1.98835E-05	3.97219E-01
3.8700E+02	2.0499E+00	3.03065E-04	1.94025E-05	3.97825E-01
3.8900E+02	2.0288E+00	2.70825E-04	1.87245E-05	3.98367E-01
3.9100E+02	2.0080E+00	2.96465E-04	1.92655E-05	3.98960E-01
3.9300E+02	1.9876E+00	2.80840E-04	1.89380E-05	3.99521E-01
3.9500E+02	1.9675E+00	2.71900E-04	1.87475E-05	4.00065E-01
3.9700E+02	1.9476E+00	2.63645E-04	1.85705E-05	4.00592E-01
3.9900E+02	1.9281E+00	2.50170E-04	1.82770E-05	4.01093E-01
4.0100E+02	1.9088E+00	2.20470E-04	1.76135E-05	4.01534E-01
4.0300E+02	1.8899E+00	2.05730E-04	1.72750E-05	4.01945E-01
4.0500E+02	1.8712E+00	2.11075E-04	1.73985E-05	4.02367E-01
4.0700E+02	1.8528E+00	1.94170E-04	1.70045E-05	4.02756E-01
4.0900E+02	1.8347E+00	1.69670E-04	1.64170E-05	4.03095E-01

Oxygen 0.7 m.f.p.

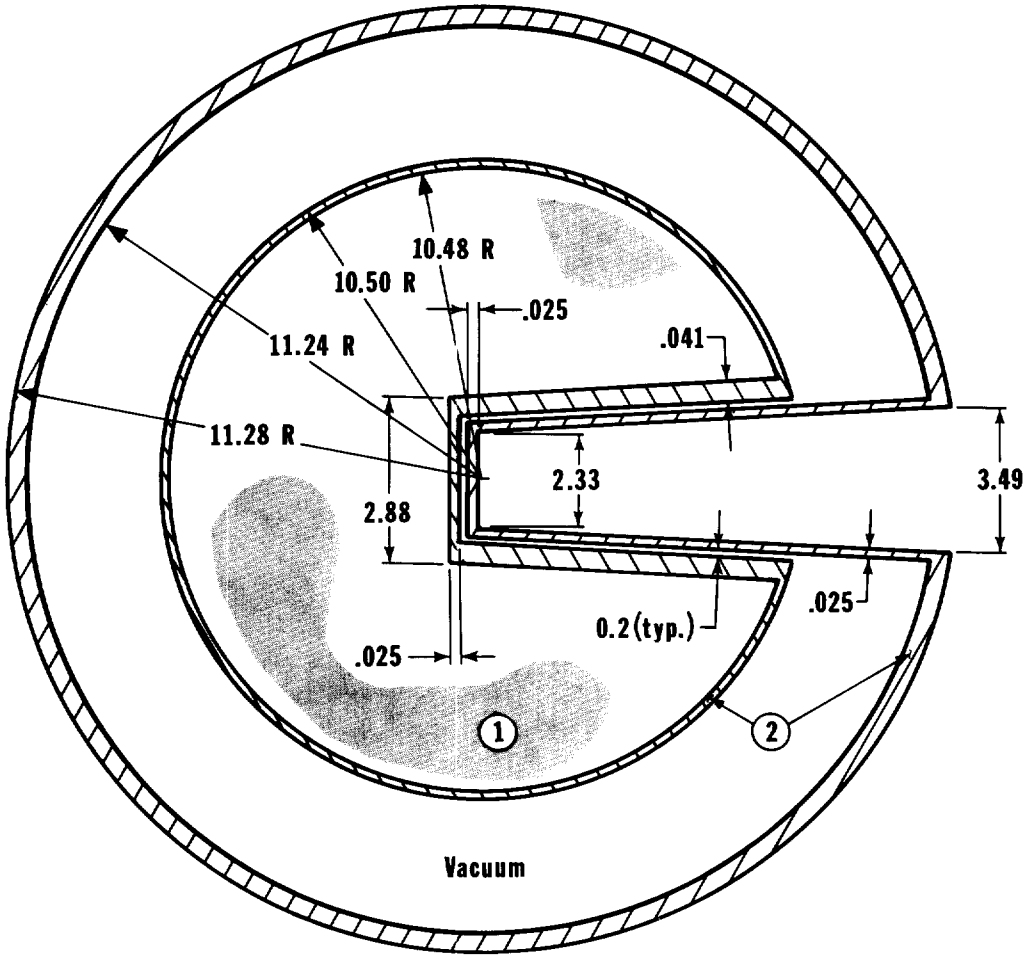

All Dimensions in Centimeters

Zone	Density (g/cm^3)	Material	Atomic %
1	1.14	Liquid Oxygen	100
2	7.9	Fe	68.6
		Cr	20.0
		Ni	8.4
		Si	2.0
		Mn	1.0

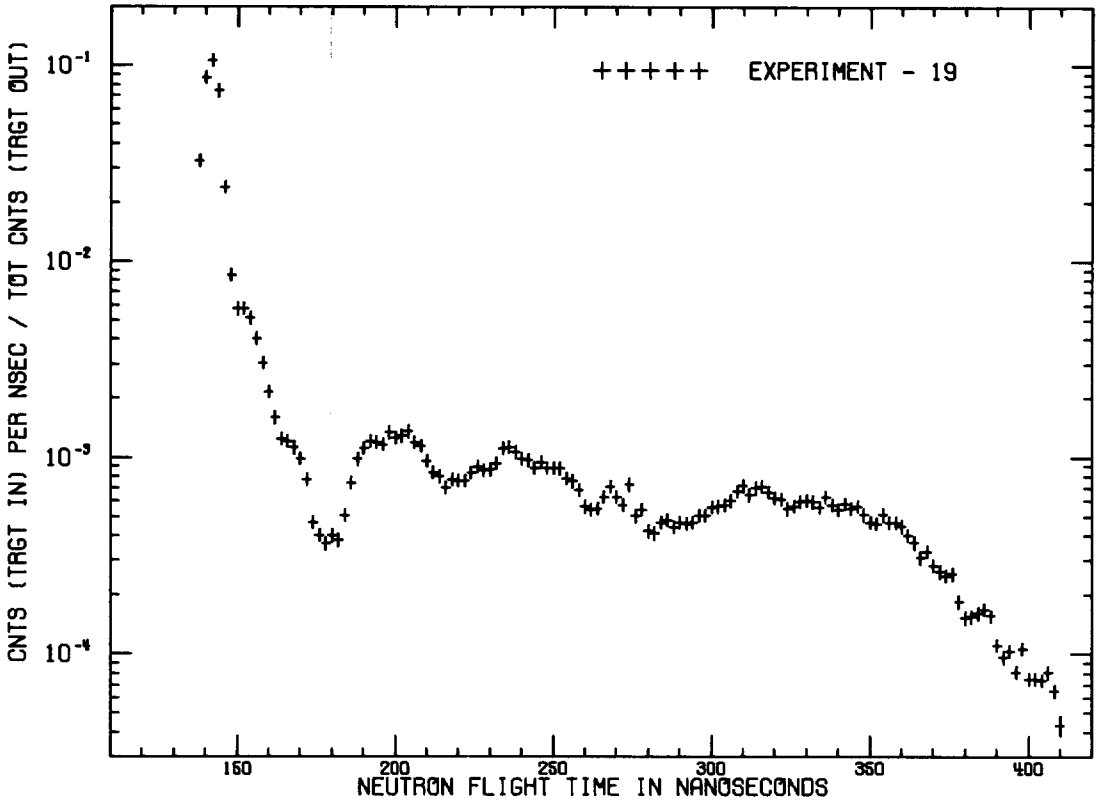

OXYGEN - 0.7 M.F.P. - 30 DEG.

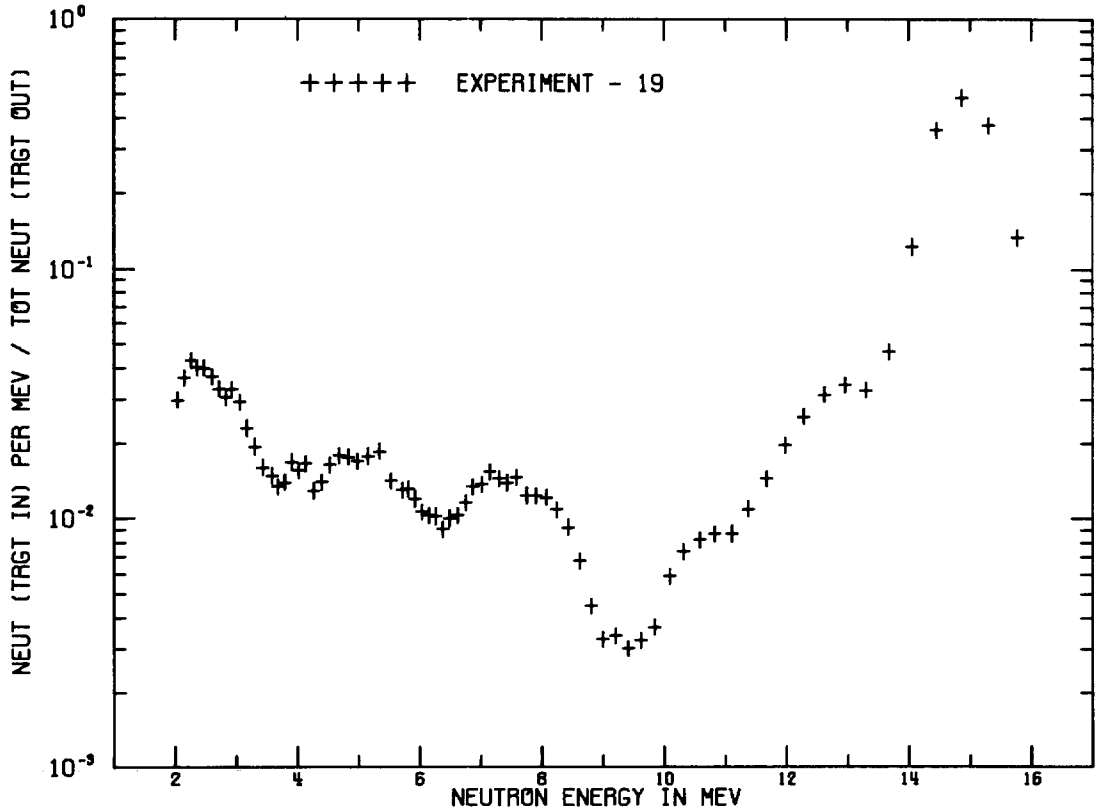

OXYGEN - 0.7 M.F.P. - 30 DEG.

OXYGEN - 0.7 M.F.P. - 30 DEG.
FLIGHTPATH = 754.00 CM DETECTOR = PILOT B FWHM = 5 NS

TIME(NS)	CALCULATED ENERGY(MEV)	CNT/NS/SOURCE	ERROR	INTEGRAL
1.3700E+02	1.6242E+01	4.54500E-03	5.00000E-06	9.09000E-03
1.3900E+02	1.5766E+01	3.27000E-02	2.50000E-05	7.44900E-02
1.4100E+02	1.5311E+01	8.66500E-02	3.50000E-05	2.47790E-01
1.4300E+02	1.4876E+01	1.05750E-01	5.00000E-05	4.59290E-01
1.4500E+02	1.4459E+01	7.39500E-02	3.50000E-05	6.07190E-01
1.4700E+02	1.4059E+01	2.38500E-02	2.50000E-05	6.54890E-01
1.4900E+02	1.3676E+01	8.50500E-03	2.50000E-05	6.71900E-01
1.5100E+02	1.3308E+01	5.70500E-03	2.50000E-05	6.83310E-01
1.5300E+02	1.2956E+01	5.75000E-03	2.50000E-05	6.94810E-01
1.5500E+02	1.2617E+01	5.10000E-03	2.50000E-05	7.05010E-01
1.5700E+02	1.2291E+01	4.04500E-03	2.50000E-05	7.13100E-01
1.5900E+02	1.1978E+01	3.02500E-03	2.50000E-05	7.19150E-01
1.6100E+02	1.1677E+01	2.16500E-03	2.50000E-05	7.23480E-01
1.6300E+02	1.1387E+01	1.59500E-03	5.00000E-06	7.26670E-01
1.6500E+02	1.1107E+01	1.24000E-03	5.00000E-06	7.29150E-01
1.6700E+02	1.0838E+01	1.20500E-03	5.00000E-06	7.31560E-01
1.6900E+02	1.0579E+01	1.12000E-03	5.00000E-06	7.33800E-01
1.7100E+02	1.0329E+01	9.80000E-04	5.00000E-06	7.35760E-01
1.7300E+02	1.0088E+01	7.70000E-04	5.00000E-06	7.37300E-01
1.7500E+02	9.8547E+00	4.67500E-04	5.00000E-06	7.38235E-01
1.7700E+02	9.6299E+00	4.03000E-04	5.00000E-06	7.39041E-01
1.7900E+02	9.4127E+00	3.63000E-04	5.00000E-06	7.39767E-01
1.8100E+02	9.2027E+00	3.99500E-04	5.00000E-06	7.40566E-01
1.8300E+02	8.9998E+00	3.78000E-04	5.00000E-06	7.41322E-01
1.8500E+02	8.8035E+00	5.03500E-04	5.00000E-06	7.42329E-01
1.8700E+02	8.6137E+00	7.40000E-04	5.00000E-06	7.43809E-01
1.8900E+02	8.4299E+00	9.75000E-04	5.00000E-06	7.45759E-01
1.9100E+02	8.2519E+00	1.11000E-03	5.00000E-06	7.47979E-01
1.9300E+02	8.0796E+00	1.20500E-03	5.00000E-06	7.50389E-01
1.9500E+02	7.9126E+00	1.19000E-03	5.00000E-06	7.52769E-01
1.9700E+02	7.7508E+00	1.16000E-03	5.00000E-06	7.55089E-01
1.9900E+02	7.5939E+00	1.33500E-03	5.00000E-06	7.57759E-01
2.0100E+02	7.4417E+00	1.25000E-03	5.00000E-06	7.60259E-01
2.0300E+02	7.2941E+00	1.28000E-03	5.00000E-06	7.62819E-01
2.0500E+02	7.1509E+00	1.35000E-03	5.00000E-06	7.65519E-01
2.0700E+02	7.0118E+00	1.18500E-03	5.00000E-06	7.67889E-01
2.0900E+02	6.8768E+00	1.13750E-03	5.00000E-06	7.70164E-01
2.1100E+02	6.7456E+00	9.60000E-04	5.00000E-06	7.72084E-01
2.1300E+02	6.6182E+00	8.35000E-04	5.00000E-06	7.73754E-01
2.1500E+02	6.4944E+00	7.95000E-04	5.00000E-06	7.75344E-01
2.1700E+02	6.3740E+00	7.00000E-04	5.00000E-06	7.76744E-01
2.1900E+02	6.2570E+00	7.72500E-04	5.00000E-06	7.78289E-01
2.2100E+02	6.1431E+00	7.60000E-04	5.00000E-06	7.79809E-01
2.2300E+02	6.0324E+00	7.60000E-04	5.00000E-06	7.81329E-01
2.2500E+02	5.9246E+00	8.35000E-04	5.00000E-06	7.82999E-01

2.2700E+02	5.8197E+00	8.90000E-04	5.00000E-06	7.84779E-01
2.2900E+02	5.7175E+00	8.60000E-04	5.00000E-06	7.86499E-01
2.3100E+02	5.6181E+00	8.65000E-04	5.00000E-06	7.88229E-01
2.3300E+02	5.5212E+00	9.35000E-04	5.00000E-06	7.90099E-01
2.3500E+02	5.4268E+00	1.11500E-03	5.00000E-06	7.92329E-01
2.3700E+02	5.3348E+00	1.12500E-03	5.00000E-06	7.94579E-01
2.3900E+02	5.2452E+00	1.06000E-03	5.00000E-06	7.96699E-01
2.4100E+02	5.1577E+00	9.80000E-04	5.00000E-06	7.98659E-01
2.4300E+02	5.0725E+00	9.65000E-04	5.00000E-06	8.00589E-01
2.4500E+02	4.9894E+00	8.85000E-04	5.00000E-06	8.02359E-01
2.4700E+02	4.9083E+00	9.40000E-04	5.00000E-06	8.04239E-01
2.4900E+02	4.8291E+00	8.85000E-04	5.00000E-06	8.06009E-01
2.5100E+02	4.7519E+00	8.85000E-04	5.00000E-06	8.07779E-01
2.5300E+02	4.6765E+00	8.75000E-04	5.00000E-06	8.09529E-01
2.5500E+02	4.6029E+00	7.80000E-04	5.00000E-06	8.11089E-01
2.5700E+02	4.5310E+00	7.55000E-04	5.00000E-06	8.12599E-01
2.5900E+02	4.4608E+00	6.80000E-04	5.00000E-06	8.13959E-01
2.6100E+02	4.3922E+00	5.60000E-04	5.00000E-06	8.15079E-01
2.6300E+02	4.3252E+00	5.40000E-04	5.00000E-06	8.16159E-01
2.6500E+02	4.2597E+00	5.50000E-04	5.00000E-06	8.17259E-01
2.6700E+02	4.1957E+00	6.30000E-04	5.00000E-06	8.18519E-01
2.6900E+02	4.1332E+00	7.10000E-04	5.00000E-06	8.19939E-01
2.7100E+02	4.0720E+00	6.30000E-04	5.00000E-06	8.21199E-01
2.7300E+02	4.0122E+00	5.72500E-04	5.00000E-06	8.22344E-01
2.7500E+02	3.9537E+00	7.25000E-04	5.00000E-06	8.23794E-01
2.7700E+02	3.8964E+00	5.02500E-04	5.00000E-06	8.24799E-01
2.7900E+02	3.8404E+00	5.40000E-04	5.00000E-06	8.25879E-01
2.8100E+02	3.7856E+00	4.21000E-04	5.00000E-06	8.26721E-01
2.8300E+02	3.7320E+00	4.09000E-04	5.00000E-06	8.27539E-01
2.8500E+02	3.6795E+00	4.66500E-04	5.00000E-06	8.28472E-01
2.8700E+02	3.6281E+00	4.78500E-04	5.00000E-06	8.29429E-01
2.8900E+02	3.5777E+00	4.42000E-04	5.00000E-06	8.30313E-01
2.9100E+02	3.5285E+00	4.67500E-04	5.00000E-06	8.31248E-01
2.9300E+02	3.4802E+00	4.61000E-04	5.00000E-06	8.32170E-01
2.9500E+02	3.4329E+00	4.66000E-04	5.00000E-06	8.33102E-01
2.9700E+02	3.3866E+00	5.05000E-04	5.00000E-06	8.34112E-01
2.9900E+02	3.3412E+00	5.05000E-04	5.00000E-06	8.35122E-01
3.0100E+02	3.2967E+00	5.55000E-04	5.00000E-06	8.36232E-01
3.0300E+02	3.2531E+00	5.60000E-04	5.00000E-06	8.37352E-01
3.0500E+02	3.2103E+00	5.70000E-04	5.00000E-06	8.38492E-01
3.0700E+02	3.1684E+00	6.00000E-04	5.00000E-06	8.39692E-01
3.0900E+02	3.1274E+00	6.71500E-04	5.00000E-06	8.41035E-01
3.1100E+02	3.0871E+00	7.15000E-04	5.00000E-06	8.42465E-01
3.1300E+02	3.0475E+00	6.40000E-04	5.00000E-06	8.43745E-01
3.1500E+02	3.0088E+00	6.95000E-04	5.00000E-06	8.45135E-01
3.1700E+02	2.9708E+00	7.12500E-04	5.00000E-06	8.46560E-01
3.1900E+02	2.9334E+00	6.62500E-04	5.00000E-06	8.47885E-01
3.2100E+02	2.8968E+00	6.20000E-04	5.00000E-06	8.49125E-01

3.2300E+02	2.8609E+00	6.10000E-04	5.00000E-06	8.50345E-01
3.2500E+02	2.8256E+00	5.45000E-04	5.00000E-06	8.51435E-01
3.2700E+02	2.7910E+00	5.65000E-04	5.00000E-06	8.52565E-01
3.2900E+02	2.7571E+00	5.95000E-04	5.00000E-06	8.53755E-01
3.3100E+02	2.7237E+00	6.02500E-04	5.00000E-06	8.54960E-01
3.3300E+02	2.6909E+00	5.90000E-04	5.00000E-06	8.56140E-01
3.3500E+02	2.6588E+00	5.55000E-04	5.00000E-06	8.57250E-01
3.3700E+02	2.6272E+00	6.30000E-04	5.00000E-06	8.58510E-01
3.3900E+02	2.5961E+00	5.70000E-04	5.00000E-06	8.59650E-01
3.4100E+02	2.5656E+00	5.40000E-04	5.00000E-06	8.60730E-01
3.4300E+02	2.5357E+00	5.77500E-04	5.00000E-06	8.61885E-01
3.4500E+02	2.5063E+00	5.47500E-04	5.00000E-06	8.62980E-01
3.4700E+02	2.4773E+00	5.65000E-04	5.00000E-06	8.64110E-01
3.4900E+02	2.4489E+00	5.10000E-04	5.00000E-06	8.65130E-01
3.5100E+02	2.4210E+00	4.68000E-04	5.00000E-06	8.66066E-01
3.5300E+02	2.3935E+00	4.60000E-04	5.00000E-06	8.66986E-01
3.5500E+02	2.3665E+00	5.10000E-04	5.00000E-06	8.68006E-01
3.5700E+02	2.3400E+00	4.65000E-04	5.00000E-06	8.68936E-01
3.5900E+02	2.3139E+00	4.66500E-04	5.00000E-06	8.69869E-01
3.6100E+02	2.2882E+00	4.45000E-04	5.00000E-06	8.70759E-01
3.6300E+02	2.2630E+00	4.03000E-04	5.00000E-06	8.71565E-01
3.6500E+02	2.2382E+00	3.67000E-04	5.00000E-06	8.72299E-01
3.6700E+02	2.2138E+00	3.08500E-04	5.00000E-06	8.72916E-01
3.6900E+02	2.1897E+00	3.31500E-04	5.00000E-06	8.73579E-01
3.7100E+02	2.1661E+00	2.81000E-04	5.00000E-06	8.74141E-01
3.7300E+02	2.1429E+00	2.62000E-04	5.00000E-06	8.74665E-01
3.7500E+02	2.1200E+00	2.50500E-04	5.00000E-06	8.75166E-01
3.7700E+02	2.0975E+00	2.54500E-04	5.00000E-06	8.75675E-01
3.7900E+02	2.0753E+00	1.84000E-04	5.00000E-06	8.76043E-01
3.8100E+02	2.0535E+00	1.52500E-04	5.00000E-06	8.76348E-01
3.8300E+02	2.0321E+00	1.54500E-04	5.00000E-06	8.76657E-01
3.8500E+02	2.0109E+00	1.61000E-04	5.00000E-06	8.76979E-01
3.8700E+02	1.9901E+00	1.69000E-04	5.00000E-06	8.77317E-01
3.8900E+02	1.9697E+00	1.56000E-04	5.00000E-06	8.77629E-01
3.9100E+02	1.9495E+00	1.10500E-04	5.00000E-06	8.77850E-01
3.9300E+02	1.9297E+00	9.60000E-05	5.00000E-06	8.78042E-01
3.9500E+02	1.9101E+00	1.03000E-04	5.00000E-06	8.78248E-01
3.9700E+02	1.8909E+00	8.10000E-05	5.00000E-06	8.78410E-01
3.9900E+02	1.8719E+00	1.06000E-04	5.00000E-06	8.78622E-01
4.0100E+02	1.8532E+00	7.48500E-05	5.00000E-06	8.78772E-01
4.0300E+02	1.8348E+00	7.45000E-05	5.00000E-06	8.78921E-01
4.0500E+02	1.8167E+00	7.35000E-05	5.00000E-06	8.79068E-01
4.0700E+02	1.7988E+00	8.02500E-05	5.00000E-06	8.79228E-01
4.0900E+02	1.7812E+00	6.47000E-05	5.00000E-06	8.79358E-01
4.1100E+02	1.7639E+00	4.34000E-05	5.00000E-06	8.79444E-01

Magnesium 0.7 m. f. p.

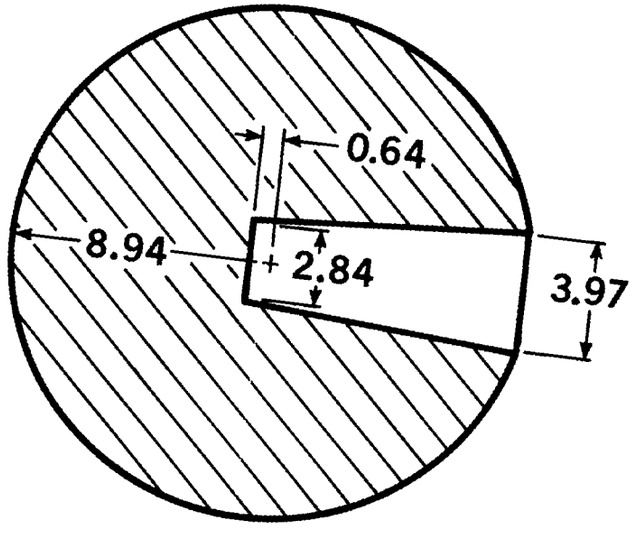

All Dimensions in Centimeters

$\rho = 1.74\ g/cm^3$

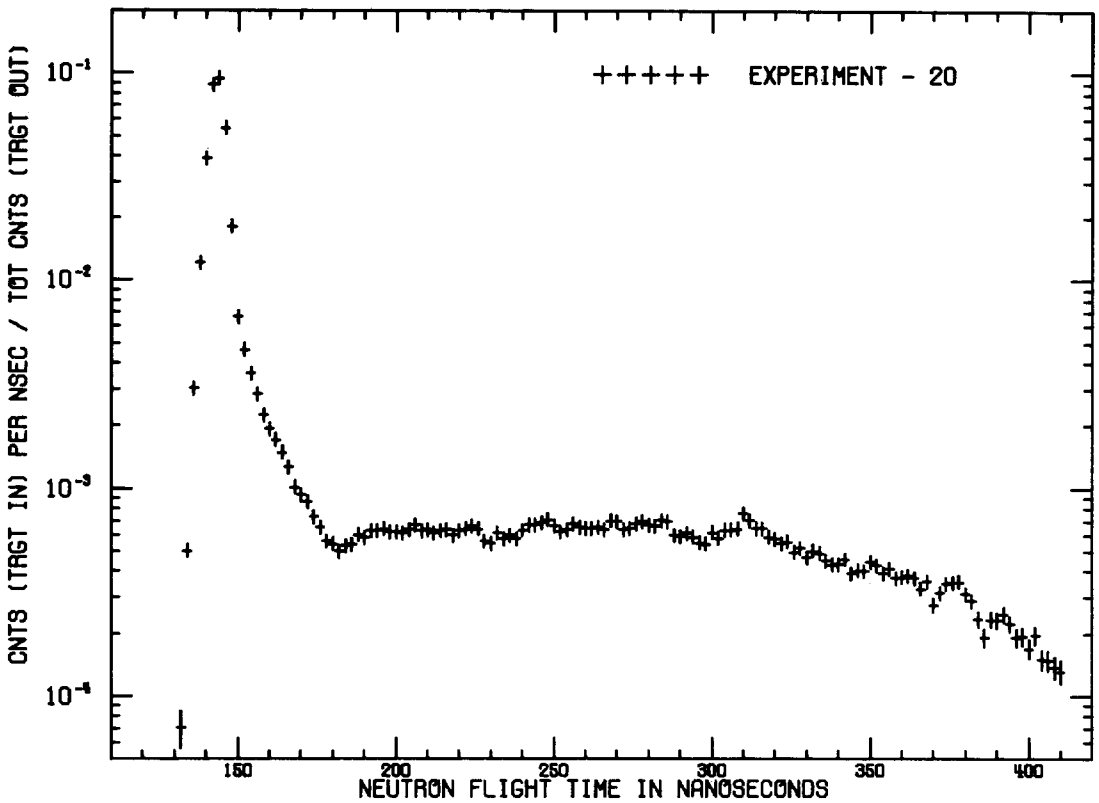

MAGNESIUM - 0.7 M.F.P. - 30 DEG.

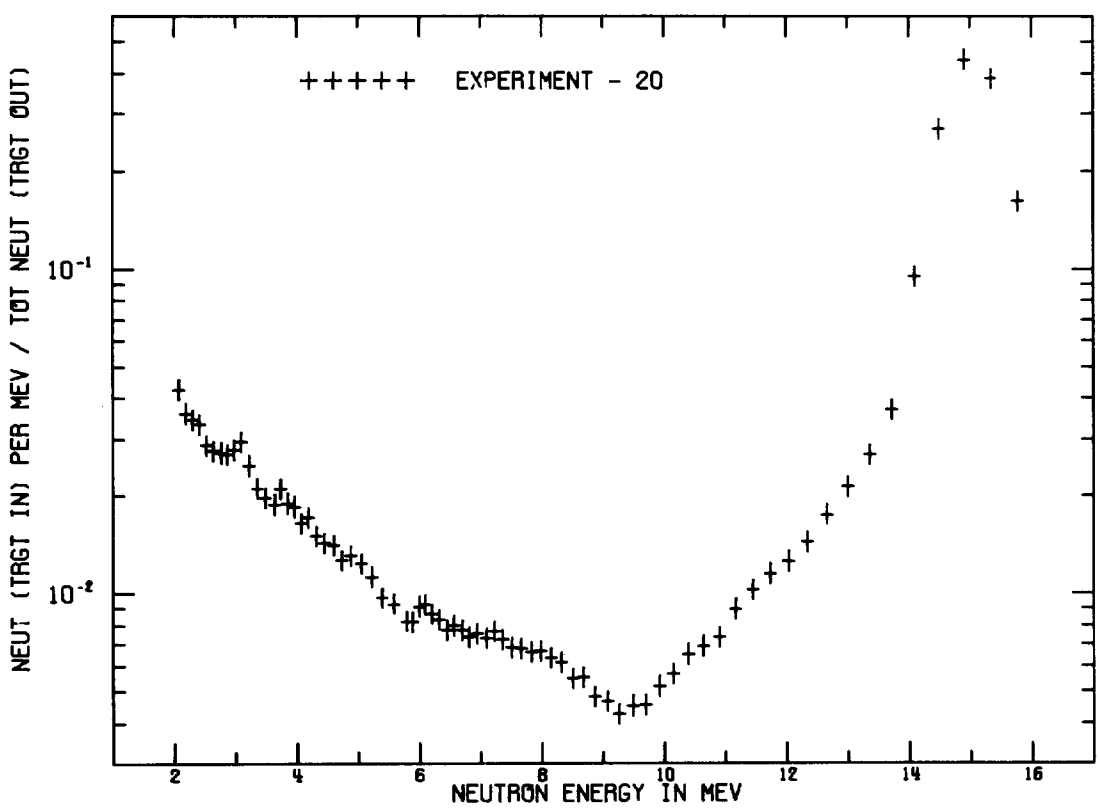

MAGNESIUM - 0.7 M.F.P. - 30 DEG.

MAGNESIUM - 0.7 M.F.P. - 30 DEG.
FLIGHTPATH = 765.20 CM DETECTOR = PILOT B FWHM = 4 NS

TIME(NS)	CALCULATED ENERGY(MEV)	CNT/NS/SOURCE	ERROR	INTEGRAL
1.3100E+02	1.8356E+01	2.74975E-05	1.23735E-05	5.49950E-05
1.3300E+02	1.7792E+01	7.03050E-05	1.40885E-05	1.95605E-04
1.3500E+02	1.7255E+01	5.00550E-04	2.55865E-05	1.19671E-03
1.3700E+02	1.6741E+01	3.01335E-03	5.76100E-05	7.22340E-03
1.3900E+02	1.6250E+01	1.21205E-02	1.13910E-04	3.14644E-02
1.4100E+02	1.5781E+01	3.88305E-02	2.03215E-04	1.09125E-01
1.4300E+02	1.5332E+01	8.77900E-02	3.05300E-04	2.84705E-01
1.4500E+02	1.4902E+01	9.47100E-02	3.17085E-04	4.74125E-01
1.4700E+02	1.4490E+01	5.47000E-02	2.41080E-04	5.83525E-01
1.4900E+02	1.4095E+01	1.81990E-02	1.39355E-04	6.19923E-01
1.5100E+02	1.3716E+01	6.68750E-03	8.49400E-05	6.33298E-01
1.5300E+02	1.3352E+01	4.63190E-03	7.09600E-05	6.42562E-01
1.5500E+02	1.3002E+01	3.55825E-03	6.24250E-05	6.49679E-01
1.5700E+02	1.2666E+01	2.82360E-03	5.58350E-05	6.55326E-01
1.5900E+02	1.2343E+01	2.25590E-03	5.01600E-05	6.59838E-01
1.6100E+02	1.2033E+01	1.92260E-03	4.65020E-05	6.63683E-01
1.6300E+02	1.1734E+01	1.71120E-03	4.40260E-05	6.67105E-01
1.6500E+02	1.1446E+01	1.48340E-03	4.11925E-05	6.70072E-01
1.6700E+02	1.1169E+01	1.26635E-03	3.82970E-05	6.72605E-01
1.6900E+02	1.0901E+01	1.01090E-03	3.45800E-05	6.74627E-01
1.7100E+02	1.0643E+01	9.30500E-04	3.33250E-05	6.76488E-01
1.7300E+02	1.0395E+01	8.59600E-04	3.21770E-05	6.78207E-01
1.7500E+02	1.0154E+01	7.29800E-04	2.99620E-05	6.79666E-01
1.7700E+02	9.9227E+00	6.53400E-04	2.85780E-05	6.80973E-01
1.7900E+02	9.6987E+00	5.59150E-04	2.67735E-05	6.82092E-01
1.8100E+02	9.4824E+00	5.41400E-04	2.64200E-05	6.83174E-01
1.8300E+02	9.2732E+00	4.97760E-04	2.55285E-05	6.84170E-01
1.8500E+02	9.0708E+00	5.33000E-04	2.62500E-05	6.85236E-01
1.8700E+02	8.8751E+00	5.35700E-04	2.63050E-05	6.86307E-01
1.8900E+02	8.6857E+00	5.99050E-04	2.75520E-05	6.87505E-01
1.9100E+02	8.5023E+00	5.79050E-04	2.71650E-05	6.88663E-01
1.9300E+02	8.3246E+00	6.28300E-04	2.81085E-05	6.89920E-01
1.9500E+02	8.1525E+00	6.28400E-04	2.81115E-05	6.91177E-01
1.9700E+02	7.9857E+00	6.39050E-04	2.83115E-05	6.92455E-01
1.9900E+02	7.8240E+00	6.17850E-04	2.79115E-05	6.93691E-01
2.0100E+02	7.6672E+00	6.17050E-04	2.78965E-05	6.94925E-01
2.0300E+02	7.5150E+00	6.11250E-04	2.77860E-05	6.96147E-01
2.0500E+02	7.3674E+00	6.35500E-04	2.82450E-05	6.97418E-01
2.0700E+02	7.2241E+00	6.66450E-04	2.88195E-05	6.98751E-01
2.0900E+02	7.0849E+00	6.26350E-04	2.80725E-05	7.00004E-01
2.1100E+02	6.9498E+00	6.32800E-04	2.81940E-05	7.01269E-01
2.1300E+02	6.8184E+00	6.08400E-04	2.77315E-05	7.02486E-01
2.1500E+02	6.6908E+00	6.24350E-04	2.80345E-05	7.03735E-01
2.1700E+02	6.5668E+00	6.35300E-04	2.82415E-05	7.05006E-01
2.1900E+02	6.4461E+00	5.97450E-04	2.75210E-05	7.06200E-01

2.2100E+02	6.3288E+00	6.28150E-04	2.81065E-05	7.07457E-01
2.2300E+02	6.2147E+00	6.38000E-04	2.82915E-05	7.08733E-01
2.2500E+02	6.1036E+00	6.62050E-04	2.87385E-05	7.10057E-01
2.2700E+02	5.9955E+00	6.38200E-04	2.82955E-05	7.11333E-01
2.2900E+02	5.8903E+00	5.56950E-04	2.67300E-05	7.12447E-01
2.3100E+02	5.7878E+00	5.43650E-04	2.64645E-05	7.13534E-01
2.3300E+02	5.6879E+00	6.08450E-04	2.77325E-05	7.14751E-01
2.3500E+02	5.5907E+00	5.72900E-04	2.70445E-05	7.15897E-01
2.3700E+02	5.4959E+00	5.98000E-04	2.75315E-05	7.17093E-01
2.3900E+02	5.4035E+00	5.72950E-04	2.70455E-05	7.18239E-01
2.4100E+02	5.3134E+00	6.29650E-04	2.81345E-05	7.19498E-01
2.4300E+02	5.2256E+00	6.69650E-04	2.88790E-05	7.20838E-01
2.4500E+02	5.1399E+00	6.67800E-04	2.88445E-05	7.22173E-01
2.4700E+02	5.0564E+00	6.87650E-04	2.92065E-05	7.23549E-01
2.4900E+02	4.9748E+00	7.08550E-04	2.95845E-05	7.24966E-01
2.5100E+02	4.8952E+00	6.59800E-04	2.86970E-05	7.26285E-01
2.5300E+02	4.8175E+00	6.21100E-04	2.79725E-05	7.27527E-01
2.5500E+02	4.7417E+00	6.33600E-04	2.82090E-05	7.28795E-01
2.5700E+02	4.6676E+00	6.74700E-04	2.89710E-05	7.30144E-01
2.5900E+02	4.5953E+00	6.54000E-04	2.85900E-05	7.31452E-01
2.6100E+02	4.5246E+00	6.41750E-04	2.83615E-05	7.32736E-01
2.6300E+02	4.4556E+00	6.41400E-04	2.83555E-05	7.34018E-01
2.6500E+02	4.3881E+00	6.49400E-04	2.85040E-05	7.35317E-01
2.6700E+02	4.3222E+00	6.32650E-04	2.81915E-05	7.36582E-01
2.6900E+02	4.2577E+00	6.99750E-04	2.94255E-05	7.37982E-01
2.7100E+02	4.1947E+00	6.92050E-04	2.92865E-05	7.39366E-01
2.7300E+02	4.1330E+00	6.36850E-04	2.82695E-05	7.40640E-01
2.7500E+02	4.0728E+00	6.44900E-04	2.84205E-05	7.41930E-01
2.7700E+02	4.0138E+00	6.77200E-04	2.90165E-05	7.43284E-01
2.7900E+02	3.9561E+00	6.94500E-04	2.93310E-05	7.44673E-01
2.8100E+02	3.8996E+00	6.69150E-04	2.88690E-05	7.46011E-01
2.8300E+02	3.8443E+00	6.57500E-04	2.86550E-05	7.47326E-01
2.8500E+02	3.7903E+00	7.03500E-04	2.94930E-05	7.48733E-01
2.8700E+02	3.7373E+00	6.92700E-04	2.92985E-05	7.50119E-01
2.8900E+02	3.6854E+00	5.95300E-04	2.74800E-05	7.51309E-01
2.9100E+02	3.6347E+00	5.90200E-04	2.73810E-05	7.52490E-01
2.9300E+02	3.5849E+00	6.08600E-04	2.77350E-05	7.53707E-01
2.9500E+02	3.5362E+00	5.85450E-04	2.72895E-05	7.54878E-01
2.9700E+02	3.4885E+00	5.48900E-04	2.65690E-05	7.55976E-01
2.9900E+02	3.4417E+00	5.40500E-04	2.64015E-05	7.57057E-01
3.0100E+02	3.3959E+00	6.15300E-04	2.78635E-05	7.58287E-01
3.0300E+02	3.3510E+00	5.76400E-04	2.71125E-05	7.59440E-01
3.0500E+02	3.3069E+00	6.30000E-04	2.81410E-05	7.60700E-01
3.0700E+02	3.2638E+00	6.30150E-04	2.81440E-05	7.61960E-01
3.0900E+02	3.2214E+00	6.38750E-04	2.83055E-05	7.63238E-01
3.1100E+02	3.1799E+00	7.55000E-04	3.04225E-05	7.64750E-01
3.1300E+02	3.1392E+00	7.00500E-04	2.94395E-05	7.66151E-01
3.1500E+02	3.0993E+00	6.42400E-04	2.83740E-05	7.67436E-01

3.1700E+02	3.0601E+00	6.41850E-04	2.83640E-05	7.68719E-01
3.1900E+02	3.0217E+00	5.85200E-04	2.72845E-05	7.69890E-01
3.2100E+02	2.9840E+00	5.71950E-04	2.70260E-05	7.71034E-01
3.2300E+02	2.9469E+00	5.43750E-04	2.64660E-05	7.72121E-01
3.2500E+02	2.9106E+00	5.54750E-04	2.66855E-05	7.73231E-01
3.2700E+02	2.8750E+00	4.95320E-04	2.54780E-05	7.74221E-01
3.2900E+02	2.8399E+00	5.19150E-04	2.59695E-05	7.75259E-01
3.3100E+02	2.8056E+00	4.67470E-04	2.48915E-05	7.76194E-01
3.3300E+02	2.7718E+00	5.01700E-04	2.56105E-05	7.77198E-01
3.3500E+02	2.7387E+00	4.87750E-04	2.53200E-05	7.78173E-01
3.3700E+02	2.7061E+00	4.49490E-04	2.45060E-05	7.79072E-01
3.3900E+02	2.6742E+00	4.30230E-04	2.40855E-05	7.79933E-01
3.4100E+02	2.6428E+00	4.31345E-04	2.41100E-05	7.80795E-01
3.4300E+02	2.6119E+00	4.57390E-04	2.46760E-05	7.81710E-01
3.4500E+02	2.5816E+00	3.91665E-04	2.32210E-05	7.82494E-01
3.4700E+02	2.5518E+00	4.03480E-04	2.34895E-05	7.83301E-01
3.4900E+02	2.5225E+00	4.00930E-04	2.34315E-05	7.84102E-01
3.5100E+02	2.4937E+00	4.44295E-04	2.43930E-05	7.84991E-01
3.5300E+02	2.4654E+00	4.28235E-04	2.40415E-05	7.85847E-01
3.5500E+02	2.4376E+00	3.90445E-04	2.31935E-05	7.86628E-01
3.5700E+02	2.4103E+00	4.11625E-04	2.36725E-05	7.87452E-01
3.5900E+02	2.3834E+00	3.72535E-04	2.27800E-05	7.88197E-01
3.6100E+02	2.3570E+00	3.74045E-04	2.28155E-05	7.88945E-01
3.6300E+02	2.3310E+00	3.79400E-04	2.29395E-05	7.89704E-01
3.6500E+02	2.3054E+00	3.70970E-04	2.27440E-05	7.90445E-01
3.6700E+02	2.2803E+00	3.28360E-04	2.17280E-05	7.91102E-01
3.6900E+02	2.2555E+00	3.57710E-04	2.24325E-05	7.91818E-01
3.7100E+02	2.2312E+00	2.74630E-04	2.03750E-05	7.92367E-01
3.7300E+02	2.2072E+00	3.13195E-04	2.13545E-05	7.92993E-01
3.7500E+02	2.1837E+00	3.49240E-04	2.22315E-05	7.93692E-01
3.7700E+02	2.1605E+00	3.52620E-04	2.23120E-05	7.94397E-01
3.7900E+02	2.1377E+00	3.54665E-04	2.23605E-05	7.95106E-01
3.8100E+02	2.1152E+00	3.11550E-04	2.13140E-05	7.95729E-01
3.8300E+02	2.0931E+00	2.87000E-04	2.06940E-05	7.96303E-01
3.8500E+02	2.0713E+00	2.34575E-04	1.93045E-05	7.96773E-01
3.8700E+02	2.0499E+00	1.91630E-04	1.80865E-05	7.97156E-01
3.8900E+02	2.0288E+00	2.32715E-04	1.92535E-05	7.97621E-01
3.9100E+02	2.0080E+00	2.31620E-04	1.92230E-05	7.98084E-01
3.9300E+02	1.9876E+00	2.46365E-04	1.96255E-05	7.98577E-01
3.9500E+02	1.9675E+00	2.21880E-04	1.89525E-05	7.99021E-01
3.9700E+02	1.9476E+00	1.91505E-04	1.80830E-05	7.99404E-01
3.9900E+02	1.9281E+00	1.92905E-04	1.81240E-05	7.99790E-01
4.0100E+02	1.9088E+00	1.68515E-04	1.73960E-05	8.00127E-01
4.0300E+02	1.8899E+00	1.95885E-04	1.82110E-05	8.00519E-01
4.0500E+02	1.8712E+00	1.50410E-04	1.68350E-05	8.00819E-01
4.0700E+02	1.8528E+00	1.48405E-04	1.67720E-05	8.01116E-01
4.0900E+02	1.8347E+00	1.36995E-04	1.64075E-05	8.01390E-01
4.1100E+02	1.8168E+00	1.31190E-04	1.62185E-05	8.01653E-01

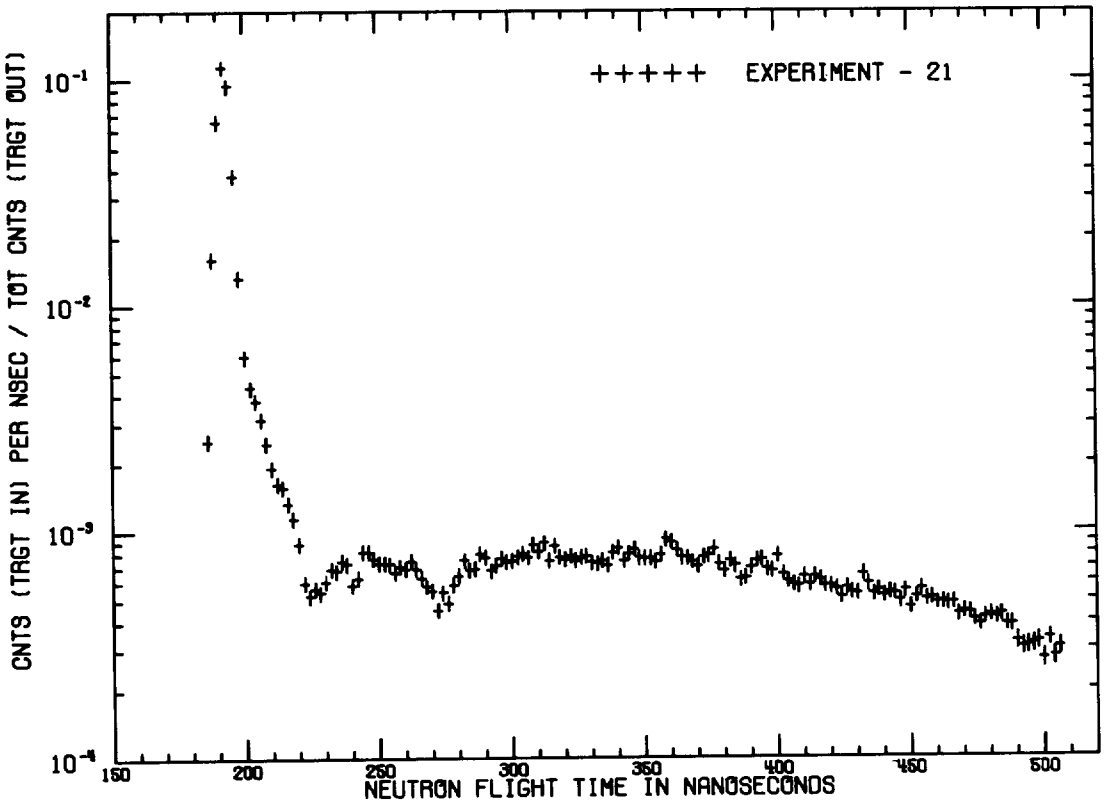

MAGNESIUM - 0.7 M.F.P. - 120 DEG.

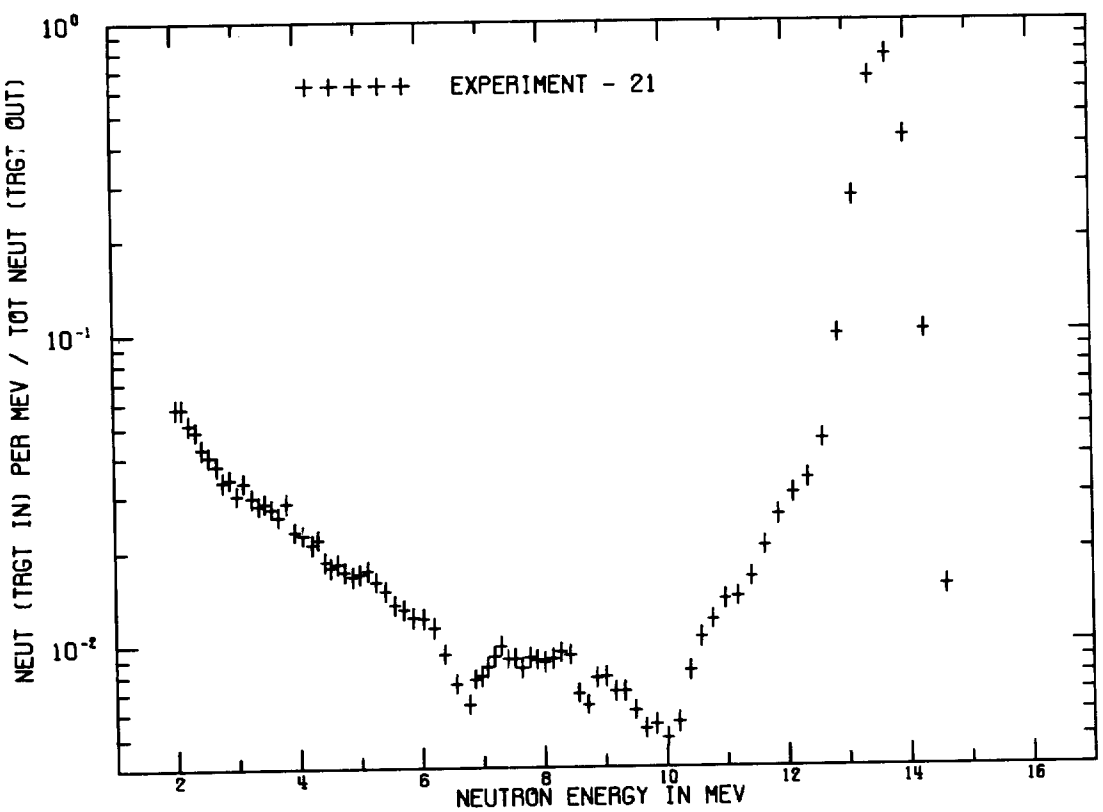

MAGNESIUM - 0.7 M.F.P. - 120 DEG.

MAGNESIUM - 0.7 M.F.P. - 120 DEG.
FLIGHTPATH = 977.20 CM DETECTOR = NE213 FWHM = 4 NS

TIME(NS)	CALCULATED ENERGY(MEV)	CNT/NS/SOURCE	ERROR	INTEGRAL
1.8500E+02	1.4930E+01	3.87155E-04	2.81510E-05	7.74310E-04
1.8700E+02	1.4605E+01	2.51355E-03	6.94100E-05	5.80141E-03
1.8900E+02	1.4291E+01	1.60455E-02	1.74450E-04	3.78924E-02
1.9100E+02	1.3986E+01	6.49350E-02	3.50680E-04	1.67762E-01
1.9300E+02	1.3692E+01	1.13840E-01	4.64270E-04	3.95442E-01
1.9500E+02	1.3406E+01	9.42350E-02	4.22420E-04	5.83912E-01
1.9700E+02	1.3130E+01	3.75635E-02	2.66765E-04	6.59039E-01
1.9900E+02	1.2862E+01	1.31940E-02	1.58225E-04	6.85427E-01
2.0100E+02	1.2602E+01	5.93800E-03	1.06300E-04	6.97303E-01
2.0300E+02	1.2350E+01	4.32295E-03	9.07900E-05	7.05949E-01
2.0500E+02	1.2105E+01	3.77040E-03	8.48350E-05	7.13490E-01
2.0700E+02	1.1868E+01	3.14935E-03	7.75950E-05	7.19789E-01
2.0900E+02	1.1638E+01	2.46295E-03	6.87150E-05	7.24715E-01
2.1100E+02	1.1414E+01	1.92270E-03	6.08200E-05	7.28560E-01
2.1300E+02	1.1197E+01	1.63195E-03	5.61150E-05	7.31824E-01
2.1500E+02	1.0986E+01	1.57260E-03	5.51050E-05	7.34969E-01
2.1700E+02	1.0781E+01	1.33210E-03	5.08050E-05	7.37633E-01
2.1900E+02	1.0582E+01	1.14885E-03	4.72690E-05	7.39931E-01
2.2100E+02	1.0388E+01	8.85000E-04	4.16515E-05	7.41701E-01
2.2300E+02	1.0199E+01	5.94000E-04	3.44090E-05	7.42889E-01
2.2500E+02	1.0016E+01	5.19100E-04	3.22840E-05	7.43927E-01
2.2700E+02	9.8374E+00	5.62900E-04	3.35430E-05	7.45053E-01
2.2900E+02	9.6637E+00	5.37900E-04	3.28305E-05	7.46129E-01
2.3100E+02	9.4946E+00	6.03750E-04	3.46760E-05	7.47336E-01
2.3300E+02	9.3298E+00	6.82950E-04	3.67745E-05	7.48702E-01
2.3500E+02	9.1694E+00	6.72300E-04	3.64995E-05	7.50047E-01
2.3700E+02	9.0131E+00	7.41550E-04	3.82535E-05	7.51530E-01
2.3900E+02	8.8607E+00	7.20900E-04	3.77390E-05	7.52972E-01
2.4100E+02	8.7122E+00	5.81600E-04	3.40675E-05	7.54135E-01
2.4300E+02	8.5674E+00	6.22000E-04	3.51720E-05	7.55379E-01
2.4500E+02	8.4262E+00	8.15950E-04	4.00525E-05	7.57011E-01
2.4700E+02	8.2885E+00	8.16750E-04	4.00715E-05	7.58644E-01
2.4900E+02	8.1542E+00	7.59850E-04	3.87040E-05	7.60164E-01
2.5100E+02	8.0231E+00	7.25300E-04	3.78495E-05	7.61615E-01
2.5300E+02	7.8952E+00	7.28400E-04	3.79265E-05	7.63072E-01
2.5500E+02	7.7703E+00	7.21050E-04	3.77435E-05	7.64514E-01
2.5700E+02	7.6483E+00	6.60350E-04	3.61880E-05	7.65834E-01
2.5900E+02	7.5292E+00	6.97600E-04	3.71505E-05	7.67230E-01
2.6100E+02	7.4129E+00	6.83650E-04	3.67930E-05	7.68597E-01
2.6300E+02	7.2993E+00	7.44250E-04	3.83205E-05	7.70085E-01
2.6500E+02	7.1883E+00	6.80800E-04	3.67205E-05	7.71447E-01
2.6700E+02	7.0798E+00	6.23000E-04	3.51990E-05	7.72693E-01
2.6900E+02	6.9737E+00	5.71000E-04	3.37715E-05	7.73835E-01
2.7100E+02	6.8700E+00	5.49100E-04	3.31520E-05	7.74933E-01
2.7300E+02	6.7687E+00	4.47385E-04	3.01080E-05	7.75828E-01

2.7500E+02	6.6695E+00	5.37150E-04	3.28085E-05	7.76902E-01
2.7700E+02	6.5725E+00	4.82470E-04	3.11915E-05	7.77867E-01
2.7900E+02	6.4777E+00	5.78750E-04	3.39880E-05	7.79025E-01
2.8100E+02	6.3849E+00	6.38200E-04	3.56040E-05	7.80301E-01
2.8300E+02	6.2940E+00	7.47100E-04	3.83905E-05	7.81795E-01
2.8500E+02	6.2051E+00	6.76800E-04	3.66165E-05	7.83149E-01
2.8700E+02	6.1181E+00	6.83750E-04	3.67960E-05	7.84516E-01
2.8900E+02	6.0329E+00	7.94200E-04	3.95340E-05	7.86105E-01
2.9100E+02	5.9495E+00	7.67450E-04	3.88890E-05	7.87640E-01
2.9300E+02	5.8678E+00	6.71600E-04	3.64815E-05	7.88983E-01
2.9500E+02	5.7877E+00	7.10550E-04	3.74790E-05	7.90404E-01
2.9700E+02	5.7093E+00	7.62350E-04	3.87640E-05	7.91929E-01
2.9900E+02	5.6325E+00	7.31150E-04	3.79950E-05	7.93391E-01
3.0100E+02	5.5573E+00	7.41300E-04	3.82465E-05	7.94874E-01
3.0300E+02	5.4835E+00	7.72650E-04	3.90155E-05	7.96419E-01
3.0500E+02	5.4112E+00	7.96950E-04	3.96005E-05	7.98013E-01
3.0700E+02	5.3403E+00	7.65250E-04	3.88355E-05	7.99543E-01
3.0900E+02	5.2708E+00	8.70850E-04	4.13290E-05	8.01285E-01
3.1100E+02	5.2027E+00	8.17550E-04	4.00900E-05	8.02920E-01
3.1300E+02	5.1359E+00	8.89900E-04	4.17635E-05	8.04700E-01
3.1500E+02	5.0703E+00	7.42750E-04	3.82835E-05	8.06185E-01
3.1700E+02	5.0061E+00	8.64550E-04	4.11845E-05	8.07914E-01
3.1900E+02	4.9430E+00	7.67850E-04	3.88990E-05	8.09450E-01
3.2100E+02	4.8811E+00	7.49600E-04	3.84515E-05	8.10949E-01
3.2300E+02	4.8204E+00	7.74850E-04	3.90690E-05	8.12499E-01
3.2500E+02	4.7608E+00	7.42150E-04	3.82685E-05	8.13983E-01
3.2700E+02	4.7023E+00	7.72050E-04	3.90010E-05	8.15527E-01
3.2900E+02	4.6449E+00	7.77100E-04	3.91225E-05	8.17082E-01
3.3100E+02	4.5885E+00	7.29800E-04	3.79620E-05	8.18541E-01
3.3300E+02	4.5331E+00	7.21400E-04	3.77515E-05	8.19984E-01
3.3500E+02	4.4788E+00	7.43300E-04	3.82965E-05	8.21471E-01
3.3700E+02	4.4254E+00	7.09400E-04	3.74500E-05	8.22889E-01
3.3900E+02	4.3730E+00	8.03450E-04	3.97555E-05	8.24496E-01
3.4100E+02	4.3215E+00	8.41950E-04	4.06615E-05	8.26180E-01
3.4300E+02	4.2709E+00	7.39650E-04	3.82065E-05	8.27660E-01
3.4500E+02	4.2212E+00	7.93800E-04	3.95250E-05	8.29247E-01
3.4700E+02	4.1723E+00	8.37900E-04	4.05675E-05	8.30923E-01
3.4900E+02	4.1243E+00	7.63350E-04	3.87890E-05	8.32450E-01
3.5100E+02	4.0772E+00	7.59600E-04	3.86975E-05	8.33969E-01
3.5300E+02	4.0308E+00	7.61300E-04	3.87395E-05	8.35491E-01
3.5500E+02	3.9852E+00	7.35750E-04	3.81090E-05	8.36963E-01
3.5700E+02	3.9404E+00	7.86800E-04	3.93575E-05	8.38537E-01
3.5900E+02	3.8964E+00	9.22600E-04	4.24975E-05	8.40382E-01
3.6100E+02	3.8530E+00	8.93500E-04	4.18445E-05	8.42169E-01
3.6300E+02	3.8104E+00	8.22400E-04	4.02045E-05	8.43814E-01
3.6500E+02	3.7686E+00	7.64050E-04	3.88065E-05	8.45342E-01
3.6700E+02	3.7273E+00	7.63750E-04	3.87985E-05	8.46869E-01
3.6900E+02	3.6868E+00	7.30300E-04	3.79740E-05	8.48330E-01

3.7100E+02	3.6469E+00	7.02450E-04	3.72740E-05	8.49735E-01
3.7300E+02	3.6077E+00	7.71350E-04	3.89835E-05	8.51277E-01
3.7500E+02	3.5691E+00	7.82150E-04	3.92450E-05	8.52842E-01
3.7700E+02	3.5311E+00	8.31900E-04	4.04270E-05	8.54505E-01
3.7900E+02	3.4938E+00	7.13850E-04	3.75620E-05	8.55933E-01
3.8100E+02	3.4570E+00	6.70600E-04	3.64555E-05	8.57274E-01
3.8300E+02	3.4208E+00	7.42300E-04	3.82725E-05	8.58759E-01
3.8500E+02	3.3851E+00	7.04650E-04	3.73290E-05	8.60168E-01
3.8700E+02	3.3500E+00	6.11050E-04	3.48760E-05	8.61390E-01
3.8900E+02	3.3155E+00	6.23300E-04	3.52070E-05	8.62637E-01
3.9100E+02	3.2815E+00	6.90350E-04	3.69650E-05	8.64018E-01
3.9300E+02	3.2480E+00	7.43900E-04	3.83120E-05	8.65505E-01
3.9500E+02	3.2150E+00	7.54450E-04	3.85720E-05	8.67014E-01
3.9700E+02	3.1825E+00	6.79200E-04	3.66785E-05	8.68373E-01
3.9900E+02	3.1506E+00	6.67300E-04	3.63700E-05	8.69707E-01
4.0100E+02	3.1191E+00	7.79850E-04	3.91895E-05	8.71267E-01
4.0300E+02	3.0880E+00	6.43750E-04	3.57525E-05	8.72555E-01
4.0500E+02	3.0575E+00	5.98900E-04	3.45445E-05	8.73752E-01
4.0700E+02	3.0273E+00	5.79300E-04	3.40035E-05	8.74911E-01
4.0900E+02	2.9977E+00	5.70400E-04	3.37550E-05	8.76052E-01
4.1100E+02	2.9684E+00	6.28900E-04	3.53565E-05	8.77310E-01
4.1300E+02	2.9396E+00	5.80100E-04	3.40255E-05	8.78470E-01
4.1500E+02	2.9112E+00	6.29550E-04	3.53740E-05	8.79729E-01
4.1700E+02	2.8832E+00	6.06000E-04	3.47385E-05	8.80941E-01
4.1900E+02	2.8556E+00	5.73050E-04	3.38285E-05	8.82087E-01
4.2100E+02	2.8284E+00	5.70100E-04	3.37455E-05	8.83227E-01
4.2300E+02	2.8016E+00	5.52600E-04	3.32520E-05	8.84332E-01
4.2500E+02	2.7752E+00	5.11400E-04	3.20565E-05	8.85355E-01
4.2700E+02	2.7492E+00	5.59950E-04	3.34605E-05	8.86475E-01
4.2900E+02	2.7235E+00	5.33400E-04	3.27005E-05	8.87542E-01
4.3100E+02	2.6982E+00	5.29900E-04	3.25985E-05	8.88602E-01
4.3300E+02	2.6732E+00	6.43400E-04	3.57430E-05	8.89888E-01
4.3500E+02	2.6486E+00	5.83500E-04	3.41195E-05	8.91055E-01
4.3700E+02	2.6243E+00	5.24900E-04	3.24530E-05	8.92105E-01
4.3900E+02	2.6003E+00	5.47100E-04	3.30940E-05	8.93199E-01
4.4100E+02	2.5767E+00	5.16550E-04	3.22085E-05	8.94233E-01
4.4300E+02	2.5534E+00	5.33100E-04	3.26915E-05	8.95299E-01
4.4500E+02	2.5304E+00	5.26850E-04	3.25105E-05	8.96352E-01
4.4700E+02	2.5077E+00	4.90145E-04	3.14235E-05	8.97333E-01
4.4900E+02	2.4853E+00	5.44050E-04	3.30080E-05	8.98421E-01
4.5100E+02	2.4632E+00	4.60050E-04	3.05035E-05	8.99341E-01
4.5300E+02	2.4414E+00	5.08250E-04	3.19645E-05	9.00357E-01
4.5500E+02	2.4199E+00	5.51900E-04	3.32315E-05	9.01461E-01
4.5700E+02	2.3987E+00	4.96795E-04	3.16230E-05	9.02455E-01
4.5900E+02	2.3778E+00	5.04050E-04	3.18400E-05	9.03463E-01
4.6100E+02	2.3571E+00	4.78920E-04	3.10835E-05	9.04421E-01
4.6300E+02	2.3367E+00	4.83695E-04	3.12285E-05	9.05388E-01
4.6500E+02	2.3166E+00	4.78400E-04	3.10680E-05	9.06345E-01

4.6700E+02	2.2967E+00	4.81250E-04	3.11545E-05	9.07307E-01
4.6900E+02	2.2771E+00	4.25420E-04	2.94095E-05	9.08158E-01
4.7100E+02	2.2577E+00	4.39110E-04	2.98465E-05	9.09036E-01
4.7300E+02	2.2386E+00	4.33580E-04	2.96710E-05	9.09904E-01
4.7500E+02	2.2197E+00	4.04805E-04	2.87385E-05	9.10713E-01
4.7700E+02	2.2011E+00	3.86415E-04	2.81260E-05	9.11486E-01
4.7900E+02	2.1827E+00	4.12685E-04	2.89970E-05	9.12311E-01
4.8100E+02	2.1645E+00	4.23100E-04	2.93345E-05	9.13158E-01
4.8300E+02	2.1466E+00	4.14255E-04	2.90480E-05	9.13986E-01
4.8500E+02	2.1288E+00	4.25675E-04	2.94175E-05	9.14838E-01
4.8700E+02	2.1113E+00	3.86140E-04	2.81170E-05	9.15610E-01
4.8900E+02	2.0940E+00	3.83060E-04	2.80130E-05	9.16376E-01
4.9100E+02	2.0770E+00	3.24400E-04	2.59555E-05	9.17025E-01
4.9300E+02	2.0601E+00	3.04665E-04	2.52260E-05	9.17634E-01
4.9500E+02	2.0434E+00	3.08300E-04	2.53620E-05	9.18251E-01
4.9700E+02	2.0270E+00	3.13525E-04	2.55560E-05	9.18878E-01
4.9900E+02	2.0107E+00	3.23840E-04	2.59350E-05	9.19525E-01
5.0100E+02	1.9946E+00	2.70925E-04	2.39265E-05	9.20067E-01
5.0300E+02	1.9787E+00	3.33790E-04	2.62955E-05	9.20735E-01
5.0500E+02	1.9630E+00	2.77530E-04	2.41865E-05	9.21290E-01
5.0700E+02	1.9475E+00	3.04155E-04	2.52065E-05	9.21898E-01

Magnesium 1.2 m. f. p.

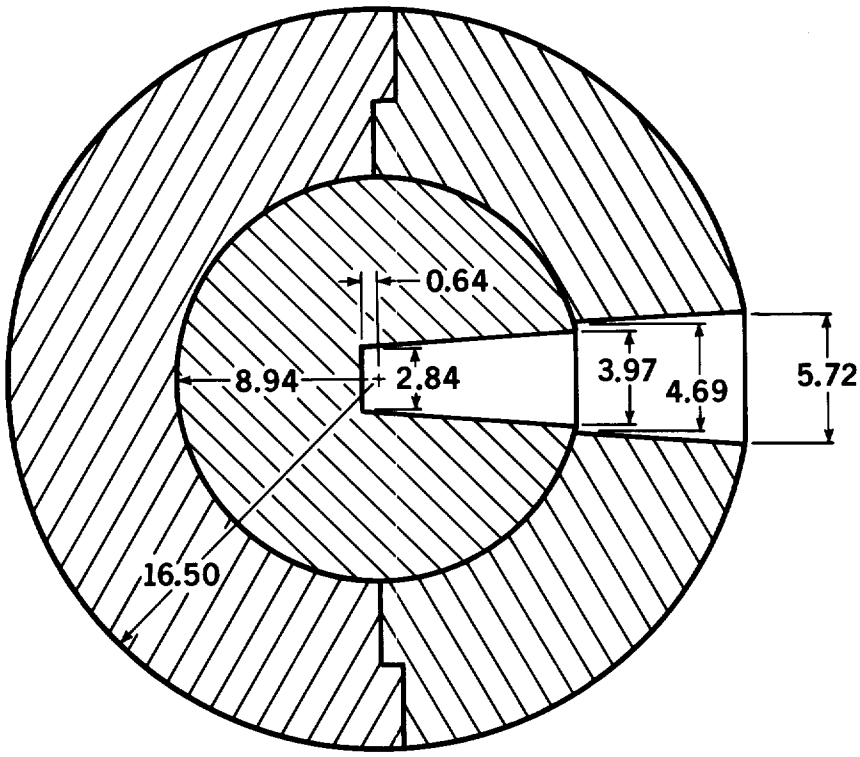

All Dimensions in Centimeters

$\rho = 1.74\ g/cm^3$

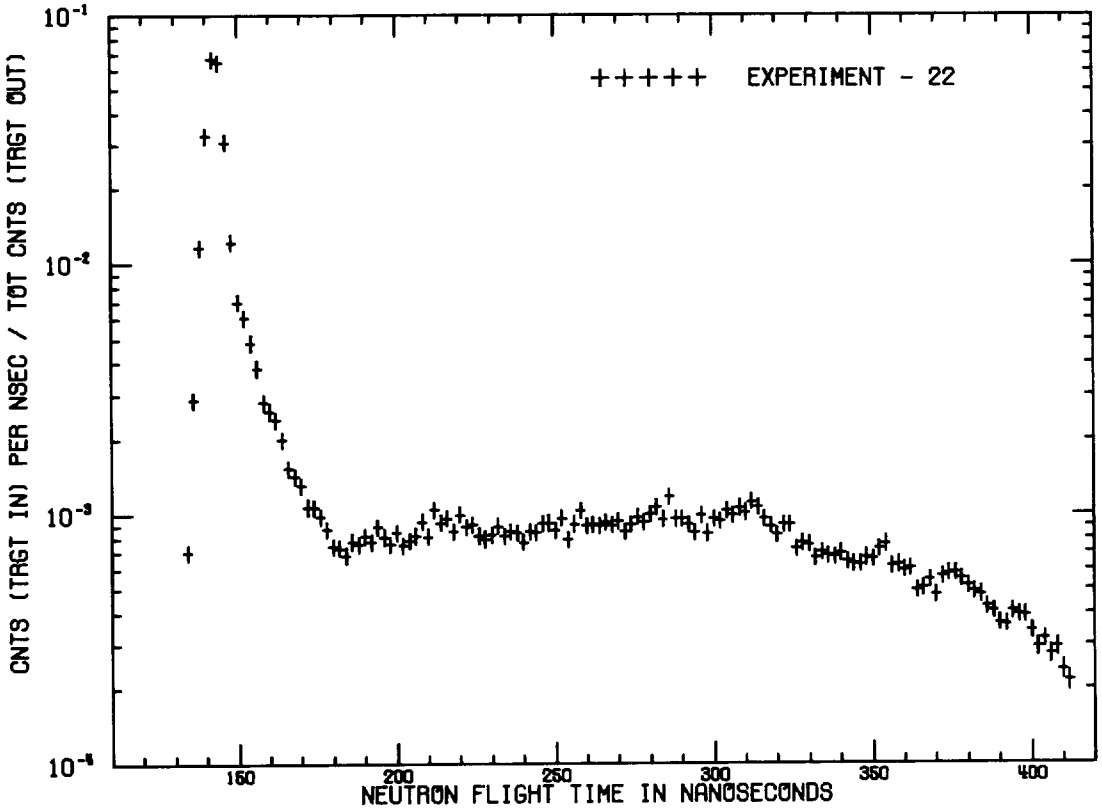

MAGNESIUM - 1.2 M.F.P. - 30 DEG.

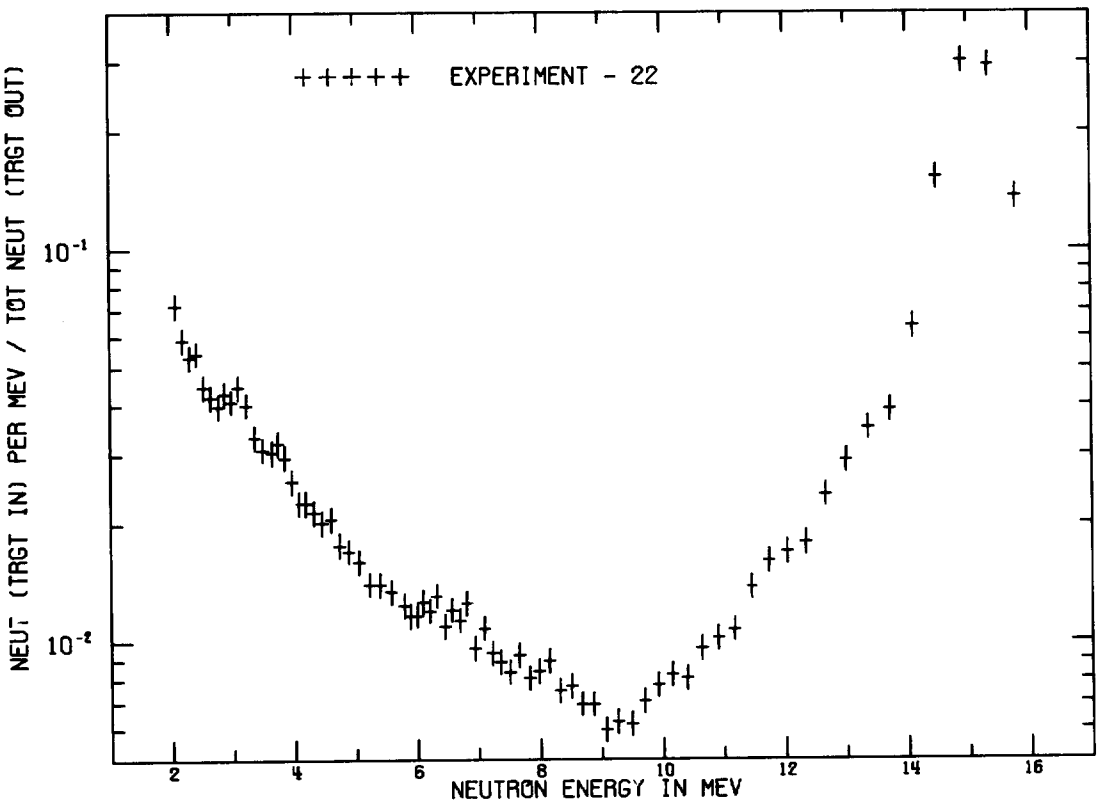

MAGNESIUM - 1.2 M.F.P. - 30 DEG.

MAGNESIUM - 1.2 M.F.P. - 30 DEG.
FLIGHTPATH = 765.20 CM DETECTOR = PILOT B FWHM = 4 NS

TIME(NS)	CALCULATED ENERGY(MEV)	CNT/NS/SOURCE	ERROR	INTEGRAL
1.3300E+02	1.7792E+01	1.11830E-04	1.72895E-05	2.23660E-04
1.3500E+02	1.7255E+01	7.01900E-04	3.03890E-05	1.62746E-03
1.3700E+02	1.6741E+01	2.85745E-03	5.66150E-05	7.34236E-03
1.3900E+02	1.6250E+01	1.16350E-02	1.11785E-04	3.06124E-02
1.4100E+02	1.5781E+01	3.26860E-02	1.86490E-04	9.59844E-02
1.4300E+02	1.5332E+01	6.65350E-02	2.65720E-04	2.29054E-01
1.4500E+02	1.4902E+01	6.45300E-02	2.61700E-04	3.58114E-01
1.4700E+02	1.4490E+01	3.08605E-02	1.81235E-04	4.19835E-01
1.4900E+02	1.4095E+01	1.22210E-02	1.14525E-04	4.44277E-01
1.5100E+02	1.3716E+01	7.02900E-03	8.73000E-05	4.58335E-01
1.5300E+02	1.3352E+01	6.05950E-03	8.12050E-05	4.70454E-01
1.5500E+02	1.3002E+01	4.82635E-03	7.27250E-05	4.80107E-01
1.5700E+02	1.2666E+01	3.81890E-03	6.49850E-05	4.87745E-01
1.5900E+02	1.2343E+01	2.79805E-03	5.60550E-05	4.93341E-01
1.6100E+02	1.2033E+01	2.57730E-03	5.39300E-05	4.98496E-01
1.6300E+02	1.1734E+01	2.37995E-03	5.19600E-05	5.03255E-01
1.6500E+02	1.1446E+01	1.98655E-03	4.77840E-05	5.07229E-01
1.6700E+02	1.1169E+01	1.51855E-03	4.22840E-05	5.10266E-01
1.6900E+02	1.0901E+01	1.41085E-03	4.09140E-05	5.13087E-01
1.7100E+02	1.0643E+01	1.29745E-03	3.94200E-05	5.15682E-01
1.7300E+02	1.0395E+01	1.06555E-03	3.61720E-05	5.17813E-01
1.7500E+02	1.0154E+01	1.06420E-03	3.61530E-05	5.19942E-01
1.7700E+02	9.9227E+00	9.77350E-04	3.48580E-05	5.21896E-01
1.7900E+02	9.6987E+00	8.66600E-04	3.31340E-05	5.23630E-01
1.8100E+02	9.4824E+00	7.37050E-04	3.09955E-05	5.25104E-01
1.8300E+02	9.2732E+00	7.28050E-04	3.08415E-05	5.26560E-01
1.8500E+02	9.0708E+00	6.81500E-04	3.00320E-05	5.27923E-01
1.8700E+02	8.8751E+00	7.73450E-04	3.16105E-05	5.29470E-01
1.8900E+02	8.6857E+00	7.53000E-04	3.12665E-05	5.30976E-01
1.9100E+02	8.5023E+00	8.10250E-04	3.22210E-05	5.32596E-01
1.9300E+02	8.3246E+00	7.68150E-04	3.15220E-05	5.34133E-01
1.9500E+02	8.1525E+00	8.85050E-04	3.34275E-05	5.35903E-01
1.9700E+02	7.9857E+00	8.08400E-04	3.21905E-05	5.37519E-01
1.9900E+02	7.8240E+00	7.53700E-04	3.12790E-05	5.39027E-01
2.0100E+02	7.6672E+00	8.40150E-04	3.27085E-05	5.40707E-01
2.0300E+02	7.5150E+00	7.48950E-04	3.11980E-05	5.42205E-01
2.0500E+02	7.3674E+00	7.77800E-04	3.16840E-05	5.43761E-01
2.0700E+02	7.2241E+00	8.16700E-04	3.23270E-05	5.45394E-01
2.0900E+02	7.0849E+00	9.29700E-04	3.41270E-05	5.47253E-01
2.1100E+02	6.9498E+00	8.08650E-04	3.21950E-05	5.48871E-01
2.1300E+02	6.8184E+00	1.03575E-03	3.57335E-05	5.50942E-01
2.1500E+02	6.6908E+00	9.19100E-04	3.39620E-05	5.52780E-01
2.1700E+02	6.5668E+00	9.59450E-04	3.45850E-05	5.54699E-01
2.1900E+02	6.4461E+00	8.50700E-04	3.28790E-05	5.56401E-01
2.2100E+02	6.3288E+00	9.90800E-04	3.50620E-05	5.58382E-01

2.2300E+02	6.2147E+00	8.84300E-04	3.34150E-05	5.60151E-01
2.2500E+02	6.1036E+00	9.04000E-04	3.37255E-05	5.61959E-01
2.2700E+02	5.9955E+00	8.16450E-04	3.23230E-05	5.63592E-01
2.2900E+02	5.8903E+00	7.90950E-04	3.19020E-05	5.65174E-01
2.3100E+02	5.7878E+00	8.19250E-04	3.23685E-05	5.66812E-01
2.3300E+02	5.6879E+00	8.90200E-04	3.35085E-05	5.68593E-01
2.3500E+02	5.5907E+00	8.12650E-04	3.22605E-05	5.70218E-01
2.3700E+02	5.4959E+00	8.50100E-04	3.28690E-05	5.71918E-01
2.3900E+02	5.4035E+00	8.41600E-04	3.27315E-05	5.73601E-01
2.4100E+02	5.3134E+00	7.66550E-04	3.14950E-05	5.75134E-01
2.4300E+02	5.2256E+00	8.46050E-04	3.28040E-05	5.76827E-01
2.4500E+02	5.1399E+00	8.39750E-04	3.27015E-05	5.78506E-01
2.4700E+02	5.0564E+00	9.11950E-04	3.38510E-05	5.80330E-01
2.4900E+02	4.9748E+00	9.17350E-04	3.39345E-05	5.82165E-01
2.5100E+02	4.8952E+00	8.56650E-04	3.29745E-05	5.83878E-01
2.5300E+02	4.8175E+00	9.59550E-04	3.45865E-05	5.85797E-01
2.5500E+02	4.7417E+00	7.87750E-04	3.18495E-05	5.87373E-01
2.5700E+02	4.6676E+00	9.08200E-04	3.37915E-05	5.89189E-01
2.5900E+02	4.5953E+00	1.02515E-03	3.55765E-05	5.91239E-01
2.6100E+02	4.5246E+00	8.94000E-04	3.35685E-05	5.93027E-01
2.6300E+02	4.4556E+00	9.04100E-04	3.37275E-05	5.94835E-01
2.6500E+02	4.3881E+00	8.96100E-04	3.36020E-05	5.96628E-01
2.6700E+02	4.3222E+00	9.21850E-04	3.40050E-05	5.98471E-01
2.6900E+02	4.2577E+00	9.00600E-04	3.36725E-05	6.00273E-01
2.7100E+02	4.1947E+00	9.31450E-04	3.41540E-05	6.02135E-01
2.7300E+02	4.1330E+00	8.48700E-04	3.28470E-05	6.03833E-01
2.7500E+02	4.0728E+00	9.03750E-04	3.37220E-05	6.05640E-01
2.7700E+02	4.0138E+00	9.70250E-04	3.47495E-05	6.07581E-01
2.7900E+02	3.9561E+00	9.23950E-04	3.40375E-05	6.09429E-01
2.8100E+02	3.8996E+00	9.98350E-04	3.51755E-05	6.11425E-01
2.8300E+02	3.8443E+00	1.05885E-03	3.60740E-05	6.13543E-01
2.8500E+02	3.7903E+00	9.48900E-04	3.44235E-05	6.15441E-01
2.8700E+02	3.7373E+00	1.16855E-03	3.76490E-05	6.17778E-01
2.8900E+02	3.6854E+00	9.51300E-04	3.44600E-05	6.19681E-01
2.9100E+02	3.6347E+00	9.56550E-04	3.45410E-05	6.21594E-01
2.9300E+02	3.5849E+00	9.02250E-04	3.36980E-05	6.23398E-01
2.9500E+02	3.5362E+00	8.38200E-04	3.26770E-05	6.25075E-01
2.9700E+02	3.4885E+00	9.83100E-04	3.49450E-05	6.27041E-01
2.9900E+02	3.4417E+00	8.34150E-04	3.26110E-05	6.28709E-01
3.0100E+02	3.3959E+00	9.53850E-04	3.44995E-05	6.30617E-01
3.0300E+02	3.3510E+00	9.33350E-04	3.41835E-05	6.32484E-01
3.0500E+02	3.3069E+00	1.03030E-03	3.56525E-05	6.34544E-01
3.0700E+02	3.2638E+00	9.82300E-04	3.49335E-05	6.36509E-01
3.0900E+02	3.2214E+00	1.05480E-03	3.60145E-05	6.38618E-01
3.1100E+02	3.1799E+00	1.00985E-03	3.53480E-05	6.40638E-01
3.1300E+02	3.1392E+00	1.11360E-03	3.68690E-05	6.42865E-01
3.1500E+02	3.0993E+00	1.05910E-03	3.60775E-05	6.44983E-01
3.1700E+02	3.0601E+00	9.50950E-04	3.44550E-05	6.46885E-01

3.1900E+02	3.0217E+00	8.90200E-04	3.35090E-05	6.48666E-01
3.2100E+02	2.9840E+00	8.21750E-04	3.24090E-05	6.50309E-01
3.2300E+02	2.9469E+00	9.04250E-04	3.37300E-05	6.52118E-01
3.2500E+02	2.9106E+00	9.06000E-04	3.37575E-05	6.53930E-01
3.2700E+02	2.8750E+00	7.22800E-04	3.07515E-05	6.55375E-01
3.2900E+02	2.8399E+00	7.61100E-04	3.14035E-05	6.56898E-01
3.3100E+02	2.8056E+00	7.50500E-04	3.12245E-05	6.58399E-01
3.3300E+02	2.7718E+00	6.63050E-04	2.97050E-05	6.59725E-01
3.3500E+02	2.7387E+00	6.98050E-04	3.03220E-05	6.61121E-01
3.3700E+02	2.7061E+00	6.76150E-04	2.99375E-05	6.62473E-01
3.3900E+02	2.6742E+00	6.71350E-04	2.98525E-05	6.63816E-01
3.4100E+02	2.6428E+00	6.95650E-04	3.02805E-05	6.65207E-01
3.4300E+02	2.6119E+00	6.45050E-04	2.93825E-05	6.66497E-01
3.4500E+02	2.5816E+00	6.31200E-04	2.91325E-05	6.67760E-01
3.4700E+02	2.5518E+00	6.27250E-04	2.90605E-05	6.69014E-01
3.4900E+02	2.5225E+00	6.67000E-04	2.97755E-05	6.70348E-01
3.5100E+02	2.4937E+00	6.57150E-04	2.95995E-05	6.71662E-01
3.5300E+02	2.4654E+00	7.20700E-04	3.07145E-05	6.73104E-01
3.5500E+02	2.4376E+00	7.58050E-04	3.13520E-05	6.74620E-01
3.5700E+02	2.4103E+00	6.14300E-04	2.88230E-05	6.75848E-01
3.5900E+02	2.3834E+00	6.26150E-04	2.90400E-05	6.77101E-01
3.6100E+02	2.3570E+00	5.93950E-04	2.84475E-05	6.78289E-01
3.6300E+02	2.3310E+00	6.04700E-04	2.86465E-05	6.79498E-01
3.6500E+02	2.3054E+00	4.93855E-04	2.65200E-05	6.80486E-01
3.6700E+02	2.2803E+00	5.03350E-04	2.67080E-05	6.81492E-01
3.6900E+02	2.2555E+00	5.43400E-04	2.74910E-05	6.82579E-01
3.7100E+02	2.2312E+00	4.70965E-04	2.60590E-05	6.83521E-01
3.7300E+02	2.2072E+00	5.61700E-04	2.78410E-05	6.84645E-01
3.7500E+02	2.1837E+00	5.75050E-04	2.80930E-05	6.85795E-01
3.7700E+02	2.1605E+00	5.78350E-04	2.81555E-05	6.86951E-01
3.7900E+02	2.1377E+00	5.49950E-04	2.76170E-05	6.88051E-01
3.8100E+02	2.1152E+00	5.15850E-04	2.69555E-05	6.89083E-01
3.8300E+02	2.0931E+00	4.87705E-04	2.63965E-05	6.90058E-01
3.8500E+02	2.0713E+00	4.74070E-04	2.61220E-05	6.91007E-01
3.8700E+02	2.0499E+00	4.24710E-04	2.51020E-05	6.91856E-01
3.8900E+02	2.0288E+00	4.06490E-04	2.47150E-05	6.92669E-01
3.9100E+02	2.0080E+00	3.63890E-04	2.37850E-05	6.93397E-01
3.9300E+02	1.9876E+00	3.60625E-04	2.37125E-05	6.94118E-01
3.9500E+02	1.9675E+00	4.07280E-04	2.47315E-05	6.94933E-01
3.9700E+02	1.9476E+00	3.95130E-04	2.44705E-05	6.95723E-01
3.9900E+02	1.9281E+00	3.92470E-04	2.44125E-05	6.96508E-01
4.0100E+02	1.9088E+00	3.39980E-04	2.32470E-05	6.97188E-01
4.0300E+02	1.8899E+00	2.92220E-04	2.21330E-05	6.97772E-01
4.0500E+02	1.8712E+00	3.14670E-04	2.26635E-05	6.98401E-01
4.0700E+02	1.8528E+00	2.74100E-04	2.16955E-05	6.98950E-01
4.0900E+02	1.8347E+00	2.92035E-04	2.21285E-05	6.99534E-01
4.1100E+02	1.8168E+00	2.37565E-04	2.07850E-05	7.00009E-01
4.1300E+02	1.7992E+00	2.14890E-04	2.01995E-05	7.00439E-01

Magnesium 1.9 m.f.p.

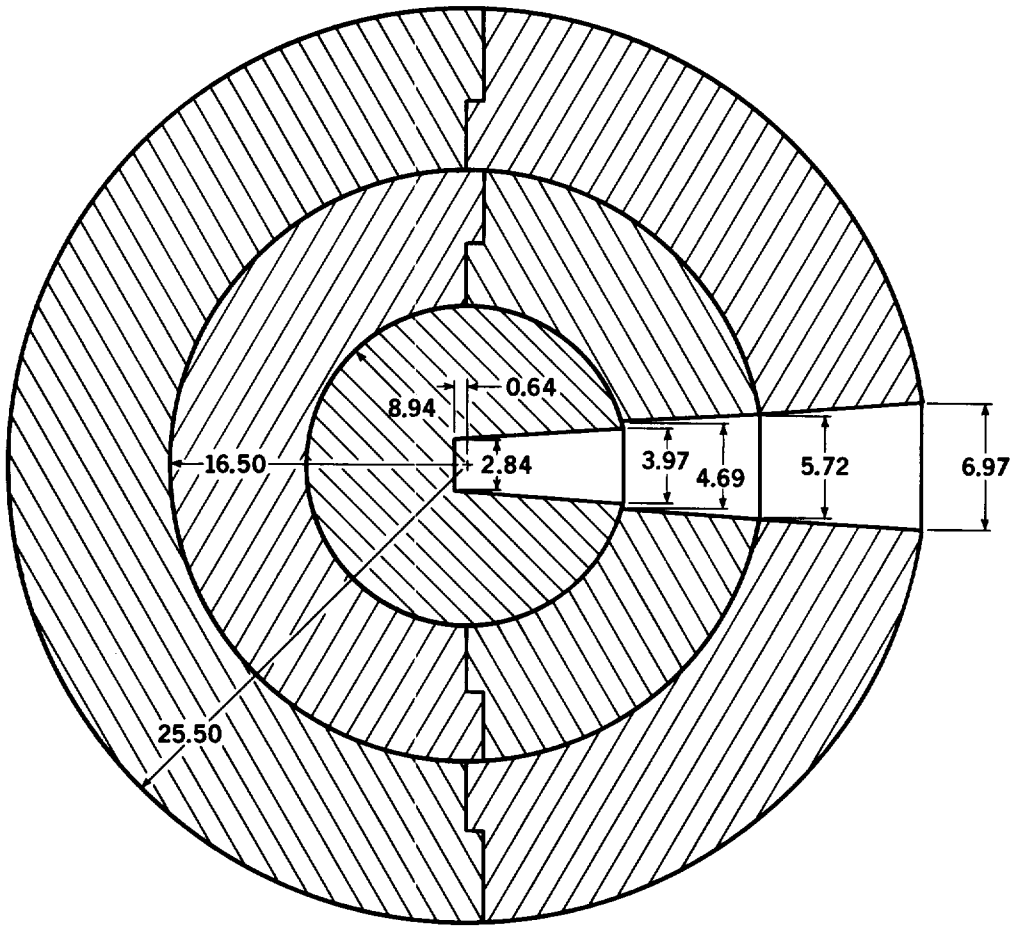

All Dimensions in Centimeters

$\rho = 1.74\ g/cm^3$

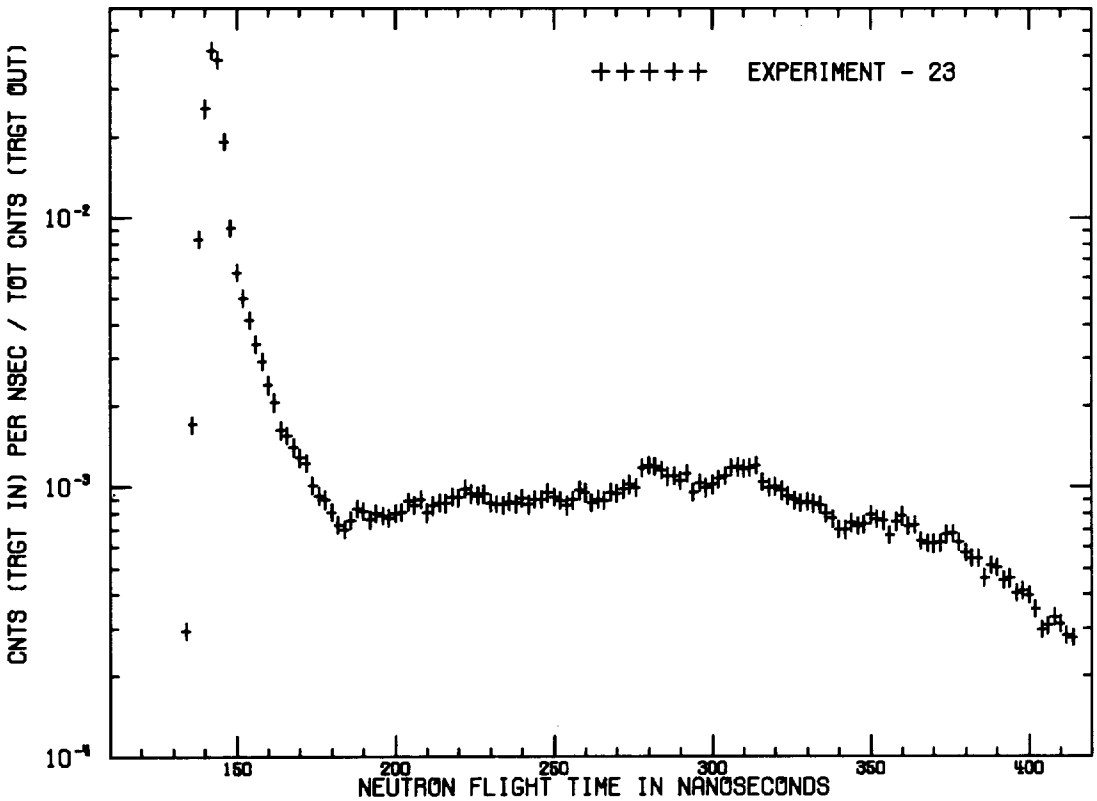

MAGNESIUM - 1.9 M.F.P. - 30 DEG.

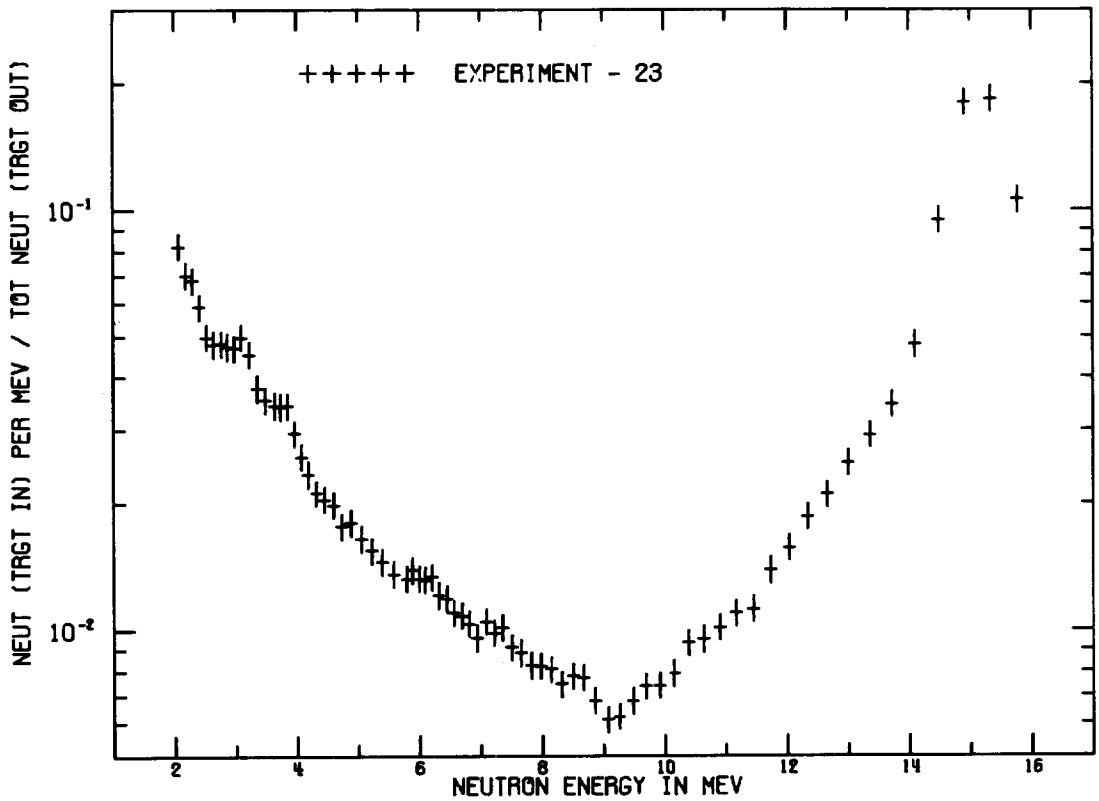

MAGNESIUM - 1.9 M.F.P. - 30 DEG.

MAGNESIUM - 1.9 M.F.P. - 30 DEG.
FLIGHTPATH = 765.20 CM DETECTOR = PILOT B FWHM = 4 NS

TIME(NS)	CALCULATED ENERGY(MEV)	CNT/NS/SOURCE	ERROR	INTEGRAL
1.3300E+02	1.7792E+01	3.49795E-05	1.34085E-05	6.99590E-05
1.3500E+02	1.7255E+01	2.93780E-04	1.91210E-05	6.57519E-04
1.3700E+02	1.6741E+01	1.70265E-03	3.71105E-05	4.06282E-03
1.3900E+02	1.6250E+01	8.28100E-03	7.81050E-05	2.06248E-02
1.4100E+02	1.5781E+01	2.54505E-02	1.35755E-04	7.15258E-02
1.4300E+02	1.5332E+01	4.17515E-02	1.73590E-04	1.55029E-01
1.4500E+02	1.4902E+01	3.86780E-02	1.67110E-04	2.32385E-01
1.4700E+02	1.4490E+01	1.91630E-02	1.17960E-04	2.70711E-01
1.4900E+02	1.4095E+01	9.16200E-03	8.20550E-05	2.89035E-01
1.5100E+02	1.3716E+01	6.24450E-03	6.81050E-05	3.01524E-01
1.5300E+02	1.3352E+01	5.03050E-03	6.13750E-05	3.11585E-01
1.5500E+02	1.3002E+01	4.16445E-03	5.60800E-05	3.19914E-01
1.5700E+02	1.2666E+01	3.38975E-03	5.08800E-05	3.26693E-01
1.5900E+02	1.2343E+01	2.91270E-03	4.73925E-05	3.32519E-01
1.6100E+02	1.2033E+01	2.38615E-03	4.32200E-05	3.37291E-01
1.6300E+02	1.1734E+01	2.05960E-03	4.04165E-05	3.41410E-01
1.6500E+02	1.1446E+01	1.62435E-03	3.63455E-05	3.44659E-01
1.6700E+02	1.1169E+01	1.54895E-03	3.55925E-05	3.47757E-01
1.6900E+02	1.0901E+01	1.40015E-03	3.40585E-05	3.50557E-01
1.7100E+02	1.0643E+01	1.28255E-03	3.27955E-05	3.53122E-01
1.7300E+02	1.0395E+01	1.22690E-03	3.21810E-05	3.55576E-01
1.7500E+02	1.0154E+01	1.01500E-03	2.97230E-05	3.57606E-01
1.7700E+02	9.9227E+00	9.27250E-04	2.86435E-05	3.59460E-01
1.7900E+02	9.6987E+00	9.00000E-04	2.82995E-05	3.61260E-01
1.8100E+02	9.4824E+00	8.10050E-04	2.71345E-05	3.62881E-01
1.8300E+02	9.2732E+00	7.24900E-04	2.59835E-05	3.64330E-01
1.8500E+02	9.0708E+00	6.97500E-04	2.56025E-05	3.65725E-01
1.8700E+02	8.8751E+00	7.55500E-04	2.64035E-05	3.67236E-01
1.8900E+02	8.6857E+00	8.34250E-04	2.74535E-05	3.68905E-01
1.9100E+02	8.5023E+00	8.19250E-04	2.72560E-05	3.70543E-01
1.9300E+02	8.3246E+00	7.60200E-04	2.64670E-05	3.72064E-01
1.9500E+02	8.1525E+00	8.00700E-04	2.70110E-05	3.73665E-01
1.9700E+02	7.9857E+00	7.87800E-04	2.68385E-05	3.75241E-01
1.9900E+02	7.8240E+00	7.69250E-04	2.65895E-05	3.76779E-01
2.0100E+02	7.6672E+00	8.03450E-04	2.70475E-05	3.78386E-01
2.0300E+02	7.5150E+00	8.11400E-04	2.71525E-05	3.80009E-01
2.0500E+02	7.3674E+00	8.88700E-04	2.81560E-05	3.81786E-01
2.0700E+02	7.2241E+00	8.56850E-04	2.77470E-05	3.83500E-01
2.0900E+02	7.0849E+00	9.00500E-04	2.83065E-05	3.85301E-01
2.1100E+02	6.9498E+00	8.06300E-04	2.70855E-05	3.86914E-01
2.1300E+02	6.8184E+00	8.55100E-04	2.77245E-05	3.88624E-01
2.1500E+02	6.6908E+00	8.76150E-04	2.79960E-05	3.90376E-01
2.1700E+02	6.5668E+00	8.72750E-04	2.79520E-05	3.92122E-01
2.1900E+02	6.4461E+00	9.20650E-04	2.85610E-05	3.93963E-01
2.2100E+02	6.3288E+00	9.14950E-04	2.84890E-05	3.95793E-01

2.2300E+02	6.2147E+00	9.86400E-04	2.93755E-05	3.97766E-01
2.2500E+02	6.1036E+00	9.45250E-04	2.88680E-05	3.99656E-01
2.2700E+02	5.9955E+00	9.27100E-04	2.86420E-05	4.01510E-01
2.2900E+02	5.8903E+00	9.45450E-04	2.88705E-05	4.03401E-01
2.3100E+02	5.7878E+00	8.75450E-04	2.79865E-05	4.05152E-01
2.3300E+02	5.6879E+00	8.65800E-04	2.78625E-05	4.06884E-01
2.3500E+02	5.5907E+00	8.63100E-04	2.78275E-05	4.08610E-01
2.3700E+02	5.4959E+00	8.85750E-04	2.81185E-05	4.10381E-01
2.3900E+02	5.4035E+00	8.71100E-04	2.79310E-05	4.12124E-01
2.4100E+02	5.3134E+00	9.13050E-04	2.84650E-05	4.13950E-01
2.4300E+02	5.2256E+00	8.64900E-04	2.78510E-05	4.15680E-01
2.4500E+02	5.1399E+00	9.03200E-04	2.83405E-05	4.17486E-01
2.4700E+02	5.0564E+00	9.01100E-04	2.83140E-05	4.19288E-01
2.4900E+02	4.9748E+00	9.53450E-04	2.89705E-05	4.21195E-01
2.5100E+02	4.8952E+00	9.22550E-04	2.85850E-05	4.23040E-01
2.5300E+02	4.8175E+00	8.91650E-04	2.81940E-05	4.24823E-01
2.5500E+02	4.7417E+00	8.56700E-04	2.77450E-05	4.26537E-01
2.5700E+02	4.6676E+00	8.97600E-04	2.82695E-05	4.28332E-01
2.5900E+02	4.5953E+00	9.73800E-04	2.92210E-05	4.30280E-01
2.6100E+02	4.5246E+00	9.53900E-04	2.89755E-05	4.32187E-01
2.6300E+02	4.4556E+00	8.77600E-04	2.80145E-05	4.33943E-01
2.6500E+02	4.3881E+00	9.01850E-04	2.83235E-05	4.35746E-01
2.6700E+02	4.3222E+00	8.96450E-04	2.82545E-05	4.37539E-01
2.6900E+02	4.2577E+00	9.57800E-04	2.90240E-05	4.39455E-01
2.7100E+02	4.1947E+00	9.45850E-04	2.88760E-05	4.41347E-01
2.7300E+02	4.1330E+00	9.82500E-04	2.93275E-05	4.43312E-01
2.7500E+02	4.0728E+00	1.02205E-03	2.98080E-05	4.45356E-01
2.7700E+02	4.0138E+00	9.93550E-04	2.94630E-05	4.47343E-01
2.7900E+02	3.9561E+00	1.18115E-03	3.16665E-05	4.49705E-01
2.8100E+02	3.8996E+00	1.20045E-03	3.18845E-05	4.52106E-01
2.8300E+02	3.8443E+00	1.18905E-03	3.17560E-05	4.54484E-01
2.8500E+02	3.7903E+00	1.15880E-03	3.14115E-05	4.56802E-01
2.8700E+02	3.7373E+00	1.09610E-03	3.06865E-05	4.58994E-01
2.8900E+02	3.6854E+00	1.09825E-03	3.07120E-05	4.61190E-01
2.9100E+02	3.6347E+00	1.05635E-03	3.02185E-05	4.63303E-01
2.9300E+02	3.5849E+00	1.12240E-03	3.09930E-05	4.65548E-01
2.9500E+02	3.5362E+00	9.58800E-04	2.90360E-05	4.67465E-01
2.9700E+02	3.4885E+00	1.03600E-03	2.99755E-05	4.69537E-01
2.9900E+02	3.4417E+00	9.91850E-04	2.94425E-05	4.71521E-01
3.0100E+02	3.3959E+00	1.02305E-03	2.98200E-05	4.73567E-01
3.0300E+02	3.3510E+00	1.07220E-03	3.04060E-05	4.75712E-01
3.0500E+02	3.3069E+00	1.10300E-03	3.07675E-05	4.77918E-01
3.0700E+02	3.2638E+00	1.17990E-03	3.16520E-05	4.80277E-01
3.0900E+02	3.2214E+00	1.18590E-03	3.17200E-05	4.82649E-01
3.1100E+02	3.1799E+00	1.17010E-03	3.15405E-05	4.84989E-01
3.1300E+02	3.1392E+00	1.18120E-03	3.16665E-05	4.87352E-01
3.1500E+02	3.0993E+00	1.20055E-03	3.18855E-05	4.89753E-01
3.1700E+02	3.0601E+00	1.04930E-03	3.01345E-05	4.91852E-01

3.1900E+02	3.0217E+00	9.95950E-04	2.94925E-05	4.93843E-01
3.2100E+02	2.9840E+00	1.00335E-03	2.95820E-05	4.95850E-01
3.2300E+02	2.9469E+00	9.73500E-04	2.92175E-05	4.97797E-01
3.2500E+02	2.9106E+00	9.29050E-04	2.86660E-05	4.99655E-01
3.2700E+02	2.8750E+00	8.97050E-04	2.82625E-05	5.01449E-01
3.2900E+02	2.8399E+00	8.74850E-04	2.79790E-05	5.03199E-01
3.3100E+02	2.8056E+00	8.84150E-04	2.80980E-05	5.04967E-01
3.3300E+02	2.7718E+00	8.72650E-04	2.79510E-05	5.06713E-01
3.3500E+02	2.7387E+00	8.61200E-04	2.78035E-05	5.08435E-01
3.3700E+02	2.7061E+00	8.04550E-04	2.70615E-05	5.10044E-01
3.3900E+02	2.6742E+00	7.66900E-04	2.65580E-05	5.11578E-01
3.4100E+02	2.6428E+00	6.99450E-04	2.56300E-05	5.12977E-01
3.4300E+02	2.6119E+00	6.95700E-04	2.55770E-05	5.14368E-01
3.4500E+02	2.5816E+00	7.37700E-04	2.61600E-05	5.15844E-01
3.4700E+02	2.5518E+00	7.18750E-04	2.58985E-05	5.17281E-01
3.4900E+02	2.5225E+00	7.29500E-04	2.60470E-05	5.18740E-01
3.5100E+02	2.4937E+00	7.90950E-04	2.68810E-05	5.20322E-01
3.5300E+02	2.4654E+00	7.63350E-04	2.65100E-05	5.21849E-01
3.5500E+02	2.4376E+00	7.52350E-04	2.63605E-05	5.23353E-01
3.5700E+02	2.4103E+00	6.64400E-04	2.51340E-05	5.24682E-01
3.5900E+02	2.3834E+00	7.45650E-04	2.62690E-05	5.26174E-01
3.6100E+02	2.3570E+00	7.82600E-04	2.67690E-05	5.27739E-01
3.6300E+02	2.3310E+00	7.21700E-04	2.59395E-05	5.29182E-01
3.6500E+02	2.3054E+00	7.25200E-04	2.59880E-05	5.30633E-01
3.6700E+02	2.2803E+00	6.34550E-04	2.47035E-05	5.31902E-01
3.6900E+02	2.2555E+00	6.21950E-04	2.45200E-05	5.33146E-01
3.7100E+02	2.2312E+00	6.17850E-04	2.44595E-05	5.34381E-01
3.7300E+02	2.2072E+00	6.22950E-04	2.45350E-05	5.35627E-01
3.7500E+02	2.1837E+00	6.69500E-04	2.52065E-05	5.36966E-01
3.7700E+02	2.1605E+00	6.74450E-04	2.52775E-05	5.38315E-01
3.7900E+02	2.1377E+00	6.27850E-04	2.46065E-05	5.39571E-01
3.8100E+02	2.1152E+00	5.72800E-04	2.37895E-05	5.40716E-01
3.8300E+02	2.0931E+00	5.45900E-04	2.33800E-05	5.41808E-01
3.8500E+02	2.0713E+00	5.45200E-04	2.33690E-05	5.42899E-01
3.8700E+02	2.0499E+00	4.60700E-04	2.20330E-05	5.43820E-01
3.8900E+02	2.0288E+00	5.16050E-04	2.29170E-05	5.44852E-01
3.9100E+02	2.0080E+00	5.05200E-04	2.27465E-05	5.45862E-01
3.9300E+02	1.9876E+00	4.51615E-04	2.18845E-05	5.46766E-01
3.9500E+02	1.9675E+00	4.59835E-04	2.20190E-05	5.47685E-01
3.9700E+02	1.9476E+00	4.07035E-04	2.11405E-05	5.48499E-01
3.9900E+02	1.9281E+00	4.15020E-04	2.12760E-05	5.49329E-01
4.0100E+02	1.9088E+00	3.99100E-04	2.10055E-05	5.50128E-01
4.0300E+02	1.8899E+00	3.53245E-04	2.02065E-05	5.50834E-01
4.0500E+02	1.8712E+00	2.97035E-04	1.91820E-05	5.51428E-01
4.0700E+02	1.8528E+00	3.06430E-04	1.93570E-05	5.52041E-01
4.0900E+02	1.8347E+00	3.29625E-04	1.97825E-05	5.52700E-01
4.1100E+02	1.8168E+00	3.11820E-04	1.94565E-05	5.53324E-01
4.1300E+02	1.7992E+00	2.81360E-04	1.88860E-05	5.53887E-01

Aluminum 0.9 m.f.p.

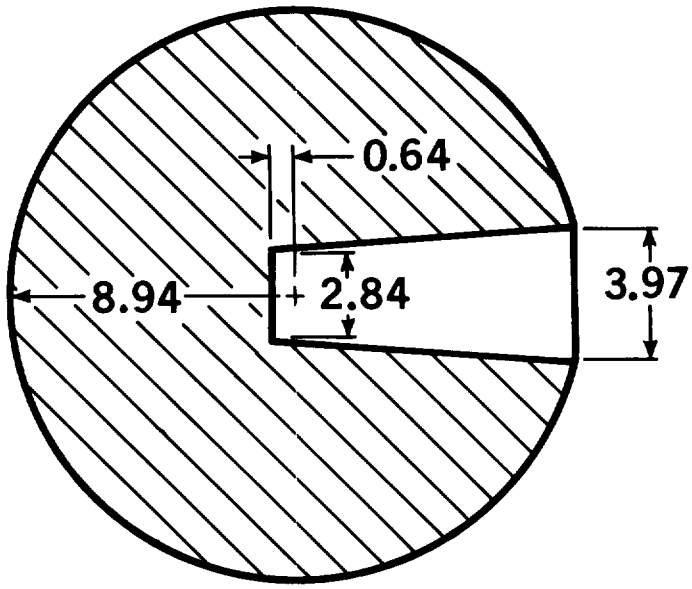

All Dimensions in Centimeters

$$\rho = 2.70\ g/cm^3$$

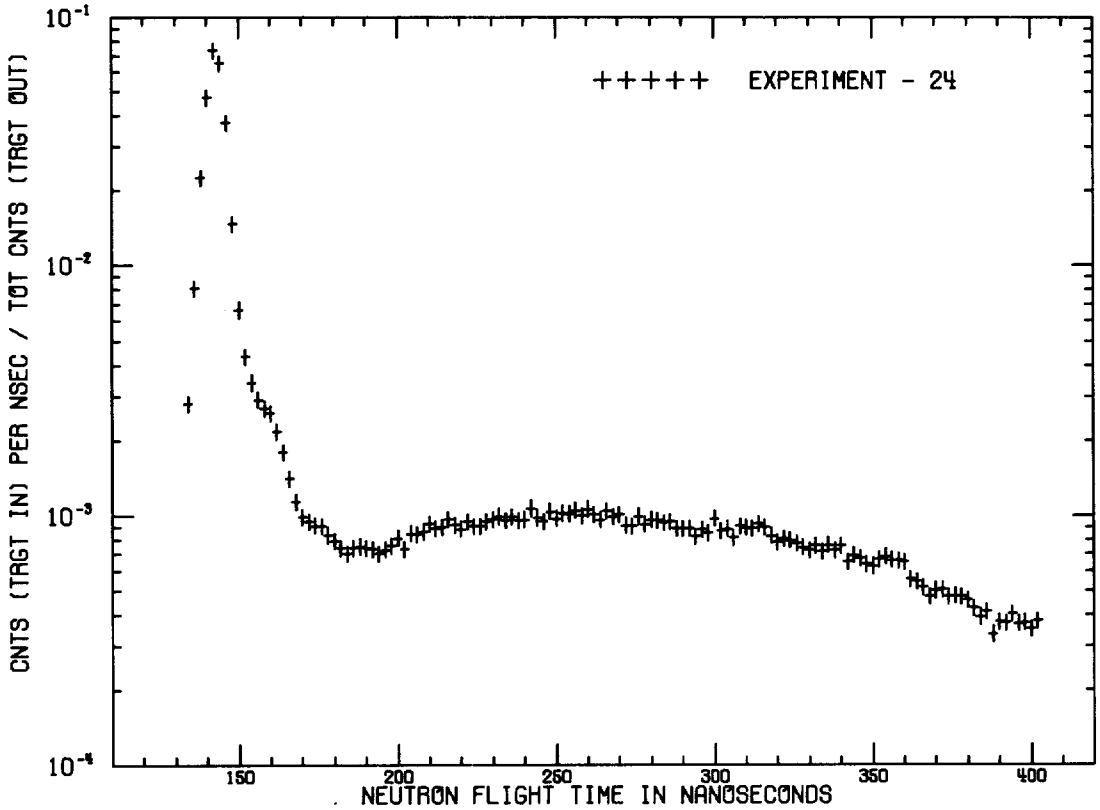

ALUMINUM - 0.9 M.F.P. - 30 DEG.

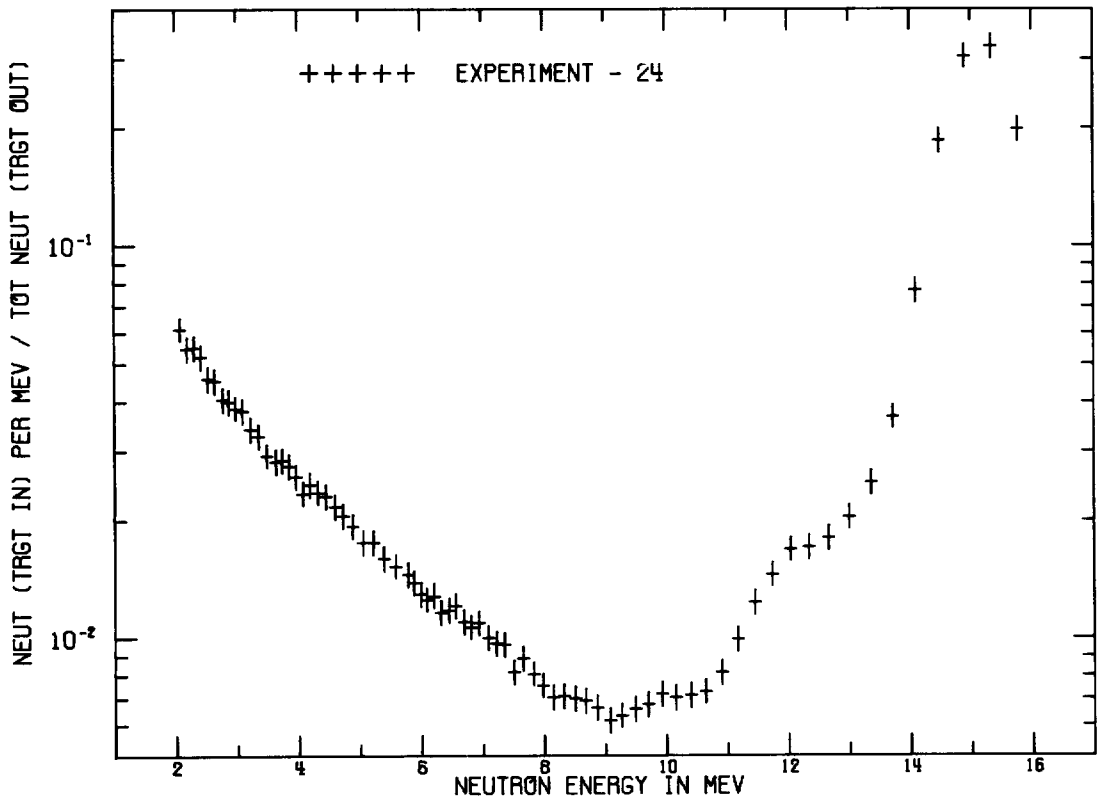

ALUMINUM - 0.9 M.F.P. - 30 DEG.

ALUMINUM - 0.9 M.F.P. - 30 DEG.
FLIGHTPATH = 765.20 CM DETECTOR = PILOT B FWHM = 4 NS

TIME(NS)	CALCULATED ENERGY(MEV)	CNT/NS/SOURCE	ERROR	INTEGRAL
1.3300E+02	1.7792E+01	1.08115E-03	3.81120E-05	2.16230E-03
1.3500E+02	1.7255E+01	2.80145E-03	5.84300E-05	7.76520E-03
1.3700E+02	1.6741E+01	8.10500E-03	9.72700E-05	2.39752E-02
1.3900E+02	1.6250E+01	2.24855E-02	1.60810E-04	6.89462E-02
1.4100E+02	1.5781E+01	4.75385E-02	2.33295E-04	1.64023E-01
1.4300E+02	1.5332E+01	7.32150E-02	2.89325E-04	3.10453E-01
1.4500E+02	1.4902E+01	6.51750E-02	2.73020E-04	4.40803E-01
1.4700E+02	1.4490E+01	3.74285E-02	2.07120E-04	5.15660E-01
1.4900E+02	1.4095E+01	1.47545E-02	1.30555E-04	5.45169E-01
1.5100E+02	1.3716E+01	6.65100E-03	8.83400E-05	5.58471E-01
1.5300E+02	1.3352E+01	4.31155E-03	7.16650E-05	5.67094E-01
1.5500E+02	1.3002E+01	3.39880E-03	6.39950E-05	5.73892E-01
1.5700E+02	1.2666E+01	2.90595E-03	5.94400E-05	5.79704E-01
1.5900E+02	1.2343E+01	2.67755E-03	5.72100E-05	5.85059E-01
1.6100E+02	1.2033E+01	2.57385E-03	5.61650E-05	5.90207E-01
1.6300E+02	1.1734E+01	2.16030E-03	5.18000E-05	5.94527E-01
1.6500E+02	1.1446E+01	1.78215E-03	4.74535E-05	5.98091E-01
1.6700E+02	1.1169E+01	1.40325E-03	4.26595E-05	6.00898E-01
1.6900E+02	1.0901E+01	1.12735E-03	3.87970E-05	6.03153E-01
1.7100E+02	1.0643E+01	9.86650E-04	3.66710E-05	6.05126E-01
1.7300E+02	1.0395E+01	9.41700E-04	3.59655E-05	6.07009E-01
1.7500E+02	1.0154E+01	9.09450E-04	3.54505E-05	6.08828E-01
1.7700E+02	9.9227E+00	9.04950E-04	3.53780E-05	6.10638E-01
1.7900E+02	9.6987E+00	8.33400E-04	3.42060E-05	6.12305E-01
1.8100E+02	9.4824E+00	7.89750E-04	3.34700E-05	6.13884E-01
1.8300E+02	9.2732E+00	7.41050E-04	3.26300E-05	6.15367E-01
1.8500E+02	9.0708E+00	7.02800E-04	3.19550E-05	6.16772E-01
1.8700E+02	8.8751E+00	7.39750E-04	3.26075E-05	6.18252E-01
1.8900E+02	8.6857E+00	7.49550E-04	3.27785E-05	6.19751E-01
1.9100E+02	8.5023E+00	7.37100E-04	3.25610E-05	6.21225E-01
1.9300E+02	8.3246E+00	7.28500E-04	3.24100E-05	6.22682E-01
1.9500E+02	8.1525E+00	6.99550E-04	3.18965E-05	6.24081E-01
1.9700E+02	7.9857E+00	7.27000E-04	3.23835E-05	6.25535E-01
1.9900E+02	7.8240E+00	7.57050E-04	3.29085E-05	6.27049E-01
2.0100E+02	7.6672E+00	8.09050E-04	3.37970E-05	6.28667E-01
2.0300E+02	7.5150E+00	7.29600E-04	3.24295E-05	6.30126E-01
2.0500E+02	7.3674E+00	8.45350E-04	3.44040E-05	6.31817E-01
2.0700E+02	7.2241E+00	8.41700E-04	3.43435E-05	6.33501E-01
2. 900E+02	7.0849E+00	8.60850E-04	3.46600E-05	6.35222E-01
2.1100E+02	6.9498E+00	9.21850E-04	3.56490E-05	6.37066E-01
2.1300E+02	6.8184E+00	8.83100E-04	3.50245E-05	6.38832E-01
2.1500E+02	6.6908E+00	8.93200E-04	3.51885E-05	6.40619E-01
2.1700E+02	6.5668E+00	9.60900E-04	3.62680E-05	6.42540E-01
2.1900E+02	6.4461E+00	9.13900E-04	3.55220E-05	6.44368E-01
2.2100E+02	6.3288E+00	8.81850E-04	3.50040E-05	6.46132E-01

2.2300E+02	6.2147E+00	9.46850E-04	3.60470E-05	6.48026E-01
2.2500E+02	6.1036E+00	9.03250E-04	3.53510E-05	6.49832E-01
2.2700E+02	5.9955E+00	9.04350E-04	3.53690E-05	6.51641E-01
2.2900E+02	5.8903E+00	9.41100E-04	3.59560E-05	6.53523E-01
2.3100E+02	5.7878E+00	9.63200E-04	3.63045E-05	6.55449E-01
2.3300E+02	5.6879E+00	9.89350E-04	3.67125E-05	6.57428E-01
2.3500E+02	5.5907E+00	9.54550E-04	3.61690E-05	6.59337E-01
2.3700E+02	5.4959E+00	9.83300E-04	3.66195E-05	6.61304E-01
2.3900E+02	5.4035E+00	9.53600E-04	3.61540E-05	6.63211E-01
2.4100E+02	5.3134E+00	9.59300E-04	3.62440E-05	6.65130E-01
2.4300E+02	5.2256E+00	1.06600E-03	3.78850E-05	6.67262E-01
2.4500E+02	5.1399E+00	9.78350E-04	3.65415E-05	6.69218E-01
2.4700E+02	5.0564E+00	9.44850E-04	3.60160E-05	6.71108E-01
2.4900E+02	4.9748E+00	1.03450E-03	3.74080E-05	6.73177E-01
2.5100E+02	4.8952E+00	9.69900E-04	3.64095E-05	6.75117E-01
2.5300E+02	4.8175E+00	1.02025E-03	3.71895E-05	6.77157E-01
2.5500E+02	4.7417E+00	1.01305E-03	3.70795E-05	6.79183E-01
2.5700E+02	4.6676E+00	1.04585E-03	3.75805E-05	6.81275E-01
2.5900E+02	4.5953E+00	9.94150E-04	3.67875E-05	6.83263E-01
2.6100E+02	4.5246E+00	1.05525E-03	3.77225E-05	6.85374E-01
2.6300E+02	4.4556E+00	1.00455E-03	3.69485E-05	6.87383E-01
2.6500E+02	4.3881E+00	9.60050E-04	3.62555E-05	6.89303E-01
2.6700E+02	4.3222E+00	1.03890E-03	3.74745E-05	6.91381E-01
2.6900E+02	4.2577E+00	9.85000E-04	3.66450E-05	6.93351E-01
2.7100E+02	4.1947E+00	1.00835E-03	3.70070E-05	6.95368E-01
2.7300E+02	4.1330E+00	9.09600E-04	3.54525E-05	6.97187E-01
2.7500E+02	4.0728E+00	9.05650E-04	3.53895E-05	6.98998E-01
2.7700E+02	4.0138E+00	9.88450E-04	3.66990E-05	7.00975E-01
2.7900E+02	3.9561E+00	9.19450E-04	3.56105E-05	7.02814E-01
2.8100E+02	3.8996E+00	9.59250E-04	3.62430E-05	7.04732E-01
2.8300E+02	3.8443E+00	9.50850E-04	3.61100E-05	7.06634E-01
2.8500E+02	3.7903E+00	9.33000E-04	3.58270E-05	7.08500E-01
2.8700E+02	3.7373E+00	9.45100E-04	3.60195E-05	7.10390E-01
2.8900E+02	3.6854E+00	8.87400E-04	3.50940E-05	7.12165E-01
2.9100E+02	3.6347E+00	8.85150E-04	3.50575E-05	7.13935E-01
2.9300E+02	3.5849E+00	8.83800E-04	3.50355E-05	7.15703E-01
2.9500E+02	3.5362E+00	8.21450E-04	3.40055E-05	7.17346E-01
2.9700E+02	3.4885E+00	8.76650E-04	3.49190E-05	7.19099E-01
2.9900E+02	3.4417E+00	8.49850E-04	3.44790E-05	7.20799E-01
3.0100E+02	3.3959E+00	9.69550E-04	3.64045E-05	7.22738E-01
3.0300E+02	3.3510E+00	8.66100E-04	3.47460E-05	7.24470E-01
3.0500E+02	3.3069E+00	8.81250E-04	3.49940E-05	7.26233E-01
3.0700E+02	3.2638E+00	8.14550E-04	3.38895E-05	7.27862E-01
3.0900E+02	3.2214E+00	9.05250E-04	3.53830E-05	7.29672E-01
3.1100E+02	3.1799E+00	8.91300E-04	3.51570E-05	7.31455E-01
3.1300E+02	3.1392E+00	8.83150E-04	3.50255E-05	7.33221E-01
3.1500E+02	3.0993E+00	9.26000E-04	3.57160E-05	7.35073E-01
3.1700E+02	3.0601E+00	8.97200E-04	3.52530E-05	7.36868E-01

3.1900E+02	3.0217E+00	8.27150E-04	3.41015E-05	7.38522E-01
3.2100E+02	2.9840E+00	7.81650E-04	3.33320E-05	7.40085E-01
3.2300E+02	2.9469E+00	8.06300E-04	3.37510E-05	7.41698E-01
3.2500E+02	2.9106E+00	7.92250E-04	3.35125E-05	7.43282E-01
3.2700E+02	2.8750E+00	7.68700E-04	3.31095E-05	7.44820E-01
3.2900E+02	2.8399E+00	7.43100E-04	3.26655E-05	7.46306E-01
3.3100E+02	2.8056E+00	7.21950E-04	3.22945E-05	7.47750E-01
3.3300E+02	2.7718E+00	7.53700E-04	3.28505E-05	7.49257E-01
3.3500E+02	2.7387E+00	7.16700E-04	3.22015E-05	7.50691E-01
3.3700E+02	2.7061E+00	7.58950E-04	3.29415E-05	7.52208E-01
3.3900E+02	2.6742E+00	7.21750E-04	3.22910E-05	7.53652E-01
3.4100E+02	2.6428E+00	7.52050E-04	3.28215E-05	7.55156E-01
3.4300E+02	2.6119E+00	6.49850E-04	3.09955E-05	7.56456E-01
3.4500E+02	2.5816E+00	6.89550E-04	3.17170E-05	7.57835E-01
3.4700E+02	2.5518E+00	6.70150E-04	3.13660E-05	7.59175E-01
3.4900E+02	2.5225E+00	6.37200E-04	3.07620E-05	7.60450E-01
3.5100E+02	2.4937E+00	6.25450E-04	3.05435E-05	7.61700E-01
3.5300E+02	2.4654E+00	6.65150E-04	3.12755E-05	7.63031E-01
3.5500E+02	2.4376E+00	6.82200E-04	3.15850E-05	7.64395E-01
3.5700E+02	2.4103E+00	6.61050E-04	3.12005E-05	7.65717E-01
3.5900E+02	2.3834E+00	6.57250E-04	3.11310E-05	7.67032E-01
3.6100E+02	2.3570E+00	6.47900E-04	3.09600E-05	7.68328E-01
3.6300E+02	2.3310E+00	5.54450E-04	2.91875E-05	7.69436E-01
3.6500E+02	2.3054E+00	5.42500E-04	2.89535E-05	7.70521E-01
3.6700E+02	2.2803E+00	5.13900E-04	2.83845E-05	7.71549E-01
3.6900E+02	2.2555E+00	4.72930E-04	2.75310E-05	7.72493E-01
3.7100E+02	2.2312E+00	5.00800E-04	2.81210E-05	7.73495E-01
3.7300E+02	2.2072E+00	5.03350E-04	2.81725E-05	7.74502E-01
3.7500E+02	2.1837E+00	4.72295E-04	2.75365E-05	7.75446E-01
3.7700E+02	2.1605E+00	4.75420E-04	2.76010E-05	7.76397E-01
3.7900E+02	2.1377E+00	4.73740E-04	2.75665E-05	7.77345E-01
3.8100E+02	2.1152E+00	4.56155E-04	2.72000E-05	7.78257E-01
3.8300E+02	2.0931E+00	4.25080E-04	2.65410E-05	7.79107E-01
3.8500E+02	2.0713E+00	3.91775E-04	2.58155E-05	7.79891E-01
3.8700E+02	2.0499E+00	4.10595E-04	2.62280E-05	7.80712E-01
3.8900E+02	2.0288E+00	3.33235E-04	2.44885E-05	7.81378E-01
3.9100E+02	2.0080E+00	3.72655E-04	2.53895E-05	7.82124E-01
3.9300E+02	1.9876E+00	3.70430E-04	2.53395E-05	7.82864E-01
3.9500E+02	1.9675E+00	4.01995E-04	2.60400E-05	7.83668E-01
3.9700E+02	1.9476E+00	3.68325E-04	2.52920E-05	7.84405E-01
3.9900E+02	1.9281E+00	3.72040E-04	2.53760E-05	7.85149E-01
4.0100E+02	1.9088E+00	3.51315E-04	2.49060E-05	7.85852E-01
4.0300E+02	1.8899E+00	3.78765E-04	2.55265E-05	7.86609E-01

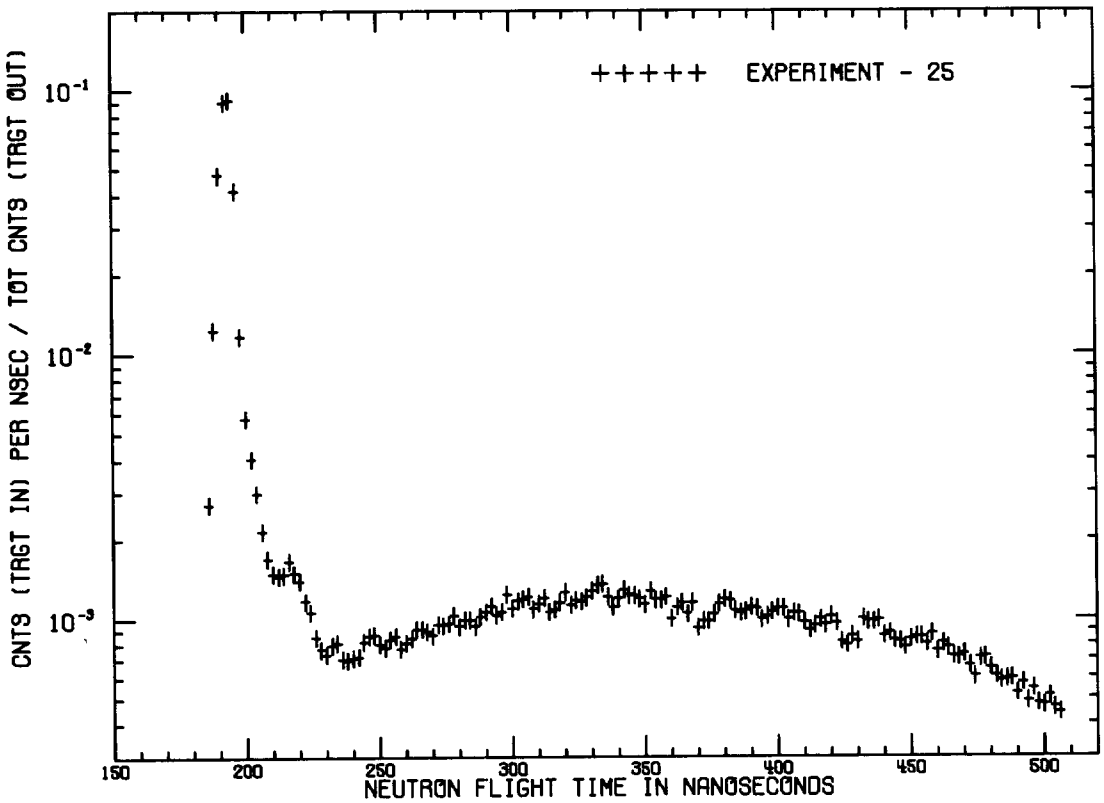

ALUMINUM - 0.9 M.F.P. - 120 DEG.

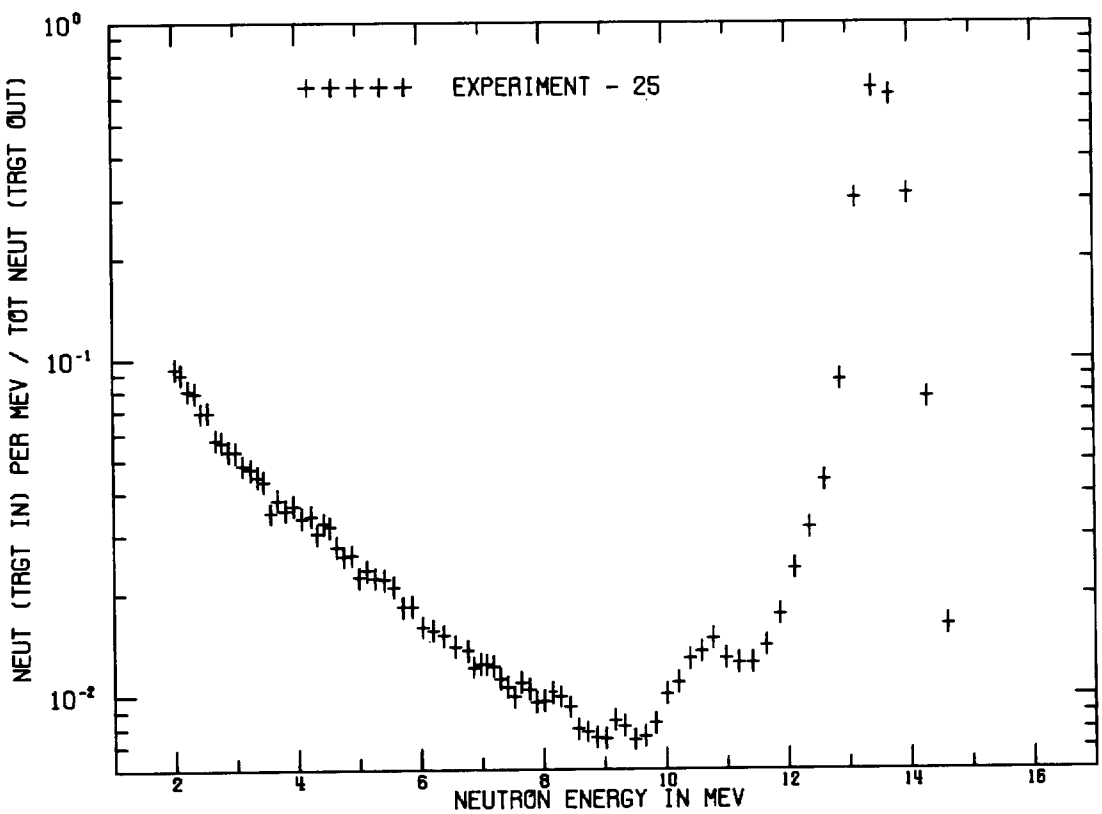

ALUMINUM - 0.9 M.F.P. - 120 DEG.

ALUMINUM - 0.9 M.F.P. - 120 DEG.
FLIGHTPATH = 977.20 CM DETECTOR = NE213 FWHM = 4 NS

TIME(NS)	CALCULATED ENERGY(MEV)	CNT/NS/SOURCE	ERROR	INTEGRAL
1.8500E+02	1.4930E+01	3.44010E-04	2.64070E-05	6.88020E-04
1.8700E+02	1.4605E+01	2.68940E-03	7.17500E-05	6.06682E-03
1.8900E+02	1.4291E+01	1.22510E-02	1.52620E-04	3.05688E-02
1.9100E+02	1.3986E+01	4.75605E-02	3.00500E-04	1.25690E-01
1.9300E+02	1.3692E+01	9.01750E-02	4.13730E-04	3.06040E-01
1.9500E+02	1.3406E+01	9.18650E-02	4.17580E-04	4.89770E-01
1.9700E+02	1.3130E+01	4.16245E-02	2.81130E-04	5.73019E-01
1.9900E+02	1.2862E+01	1.16585E-02	1.48890E-04	5.96336E-01
2.0100E+02	1.2602E+01	5.70900E-03	1.04300E-04	6.07754E-01
2.0300E+02	1.2350E+01	4.03675E-03	8.77800E-05	6.15827E-01
2.0500E+02	1.2105E+01	2.97825E-03	7.54750E-05	6.21784E-01
2.0700E+02	1.1868E+01	2.13500E-03	6.40000E-05	6.26054E-01
2.0900E+02	1.1638E+01	1.68665E-03	5.69650E-05	6.29427E-01
2.1100E+02	1.1414E+01	1.47655E-03	5.33550E-05	6.32380E-01
2.1300E+02	1.1197E+01	1.44680E-03	5.28200E-05	6.35274E-01
2.1500E+02	1.0986E+01	1.46960E-03	5.32300E-05	6.38213E-01
2.1700E+02	1.0781E+01	1.65145E-03	5.63750E-05	6.41516E-01
2.1900E+02	1.0582E+01	1.48490E-03	5.35000E-05	6.44486E-01
2.2100E+02	1.0388E+01	1.39235E-03	5.18350E-05	6.47270E-01
2.2300E+02	1.0199E+01	1.16890E-03	4.75680E-05	6.49608E-01
2.2500E+02	1.0016E+01	1.05985E-03	4.53400E-05	6.51728E-01
2.2700E+02	9.8374E+00	8.50350E-04	4.07210E-05	6.53429E-01
2.2900E+02	9.6637E+00	7.65700E-04	3.86985E-05	6.54960E-01
2.3100E+02	9.4946E+00	7.34450E-04	3.79240E-05	6.56429E-01
2.3300E+02	9.3298E+00	7.91100E-04	3.93165E-05	6.58011E-01
2.3500E+02	9.1694E+00	8.08800E-04	3.97415E-05	6.59629E-01
2.3700E+02	9.0131E+00	7.02700E-04	3.71210E-05	6.61034E-01
2.3900E+02	8.8607E+00	6.96950E-04	3.69745E-05	6.62428E-01
2.4100E+02	8.7122E+00	7.11350E-04	3.73415E-05	6.63851E-01
2.4300E+02	8.5674E+00	7.15600E-04	3.74500E-05	6.65282E-01
2.4500E+02	8.4262E+00	8.17850E-04	3.99570E-05	6.66918E-01
2.4700E+02	8.2885E+00	8.61400E-04	4.09775E-05	6.68640E-01
2.4900E+02	8.1542E+00	8.67400E-04	4.11160E-05	6.70375E-01
2.5100E+02	8.0231E+00	8.00300E-04	3.95380E-05	6.71976E-01
2.5300E+02	7.8952E+00	7.81100E-04	3.90745E-05	6.73538E-01
2.5500E+02	7.7703E+00	8.32450E-04	4.03015E-05	6.75203E-01
2.5700E+02	7.6483E+00	8.60650E-04	4.09605E-05	6.76924E-01
2.5900E+02	7.5292E+00	7.69300E-04	3.87865E-05	6.78463E-01
2.6100E+02	7.4129E+00	8.08100E-04	3.97245E-05	6.80079E-01
2.6300E+02	7.2993E+00	8.44850E-04	4.05925E-05	6.81769E-01
2.6500E+02	7.1883E+00	9.14050E-04	4.21790E-05	6.83597E-01
2.6700E+02	7.0798E+00	9.11500E-04	4.21220E-05	6.85420E-01
2.6900E+02	6.9737E+00	8.96900E-04	4.17910E-05	6.87214E-01
2.7100E+02	6.8700E+00	8.64400E-04	4.10475E-05	6.88942E-01
2.7300E+02	6.7687E+00	9.48900E-04	4.29565E-05	6.90840E-01

2.7500E+02	6.6695E+00	9.47100E-04	4.29160E-05	6.92734E-01
2.7700E+02	6.5725E+00	9.56900E-04	4.31320E-05	6.94648E-01
2.7900E+02	6.4777E+00	1.03080E-03	4.47285E-05	6.96710E-01
2.8100E+02	6.3849E+00	9.35700E-04	4.26635E-05	6.98581E-01
2.8300E+02	6.2940E+00	9.87900E-04	4.38095E-05	7.00557E-01
2.8500E+02	6.2051E+00	9.87050E-04	4.37910E-05	7.02531E-01
2.8700E+02	6.1181E+00	9.36500E-04	4.26815E-05	7.04404E-01
2.8900E+02	6.0329E+00	1.02195E-03	4.45410E-05	7.06448E-01
2.9100E+02	5.9495E+00	1.06400E-03	4.54275E-05	7.08576E-01
2.9300E+02	5.8678E+00	1.11385E-03	4.64570E-05	7.10804E-01
2.9500E+02	5.7877E+00	1.03310E-03	4.47775E-05	7.12870E-01
2.9700E+02	5.7093E+00	1.06050E-03	4.53535E-05	7.14991E-01
2.9900E+02	5.6325E+00	1.23055E-03	4.87820E-05	7.17452E-01
3.0100E+02	5.5573E+00	1.09005E-03	4.59685E-05	7.19632E-01
3.0300E+02	5.4835E+00	1.16735E-03	4.75365E-05	7.21967E-01
3.0500E+02	5.4112E+00	1.18145E-03	4.78180E-05	7.24330E-01
3.0700E+02	5.3403E+00	1.20725E-03	4.83270E-05	7.26744E-01
3.0900E+02	5.2708E+00	1.08885E-03	4.59430E-05	7.28922E-01
3.1100E+02	5.2027E+00	1.13815E-03	4.69505E-05	7.31198E-01
3.1300E+02	5.1359E+00	1.19665E-03	4.81185E-05	7.33592E-01
3.1500E+02	5.0703E+00	1.06345E-03	4.54160E-05	7.35718E-01
3.1700E+02	5.0061E+00	1.08305E-03	4.58235E-05	7.37885E-01
3.1900E+02	4.9430E+00	1.15040E-03	4.71975E-05	7.40185E-01
3.2100E+02	4.8811E+00	1.25550E-03	4.92650E-05	7.42696E-01
3.2300E+02	4.8204E+00	1.12435E-03	4.66710E-05	7.44945E-01
3.2500E+02	4.7608E+00	1.17335E-03	4.76570E-05	7.47292E-01
3.2700E+02	4.7023E+00	1.16140E-03	4.74180E-05	7.49615E-01
3.2900E+02	4.6449E+00	1.20295E-03	4.82420E-05	7.52020E-01
3.3100E+02	4.5885E+00	1.27280E-03	4.95970E-05	7.54566E-01
3.3300E+02	4.5331E+00	1.33490E-03	5.07700E-05	7.57236E-01
3.3500E+02	4.4788E+00	1.35360E-03	5.11200E-05	7.59943E-01
3.3700E+02	4.4254E+00	1.21245E-03	4.84285E-05	7.62368E-01
3.3900E+02	4.3730E+00	1.10270E-03	4.62285E-05	7.64573E-01
3.4100E+02	4.3215E+00	1.19155E-03	4.80175E-05	7.66956E-01
3.4300E+02	4.2709E+00	1.28085E-03	4.97510E-05	7.69518E-01
3.4500E+02	4.2212E+00	1.22895E-03	4.87510E-05	7.71976E-01
3.4700E+02	4.1723E+00	1.21985E-03	4.85740E-05	7.74416E-01
3.4900E+02	4.1243E+00	1.19120E-03	4.80105E-05	7.76798E-01
3.5100E+02	4.0772E+00	1.13260E-03	4.68390E-05	7.79063E-01
3.5300E+02	4.0308E+00	1.27275E-03	4.95960E-05	7.81609E-01
3.5500E+02	3.9852E+00	1.18030E-03	4.77950E-05	7.83969E-01
3.5700E+02	3.9404E+00	1.17865E-03	4.77615E-05	7.86327E-01
3.5900E+02	3.8964E+00	1.21010E-03	4.83825E-05	7.88747E-01
3.6100E+02	3.8530E+00	9.97400E-04	4.40145E-05	7.90742E-01
3.6300E+02	3.8104E+00	1.10280E-03	4.62300E-05	7.92947E-01
3.6500E+02	3.7686E+00	1.15450E-03	4.72805E-05	7.95256E-01
3.6700E+02	3.7273E+00	1.04565E-03	4.50425E-05	7.97348E-01
3.6900E+02	3.6868E+00	1.14880E-03	4.71655E-05	7.99645E-01

3.7100E+02	3.6469E+00	9.21000E-04	4.23350E-05	8.01487E-01
3.7300E+02	3.6077E+00	9.78550E-04	4.36055E-05	8.03444E-01
3.7500E+02	3.5691E+00	9.80800E-04	4.36545E-05	8.05406E-01
3.7700E+02	3.5311E+00	1.03960E-03	4.49150E-05	8.07485E-01
3.7900E+02	3.4938E+00	1.14245E-03	4.70370E-05	8.09770E-01
3.8100E+02	3.4570E+00	1.18105E-03	4.78095E-05	8.12132E-01
3.8300E+02	3.4208E+00	1.16785E-03	4.75465E-05	8.14468E-01
3.8500E+02	3.3851E+00	1.06960E-03	4.55440E-05	8.16607E-01
3.8700E+02	3.3500E+00	1.05110E-03	4.51565E-05	8.18709E-01
3.8900E+02	3.3155E+00	1.06605E-03	4.54705E-05	8.20841E-01
3.9100E+02	3.2815E+00	1.10375E-03	4.62500E-05	8.23049E-01
3.9300E+02	3.2480E+00	1.09420E-03	4.60540E-05	8.25237E-01
3.9500E+02	3.2150E+00	9.95400E-04	4.39710E-05	8.27228E-01
3.9700E+02	3.1825E+00	1.02120E-03	4.45250E-05	8.29270E-01
3.9900E+02	3.1506E+00	1.06415E-03	4.54305E-05	8.31399E-01
4.0100E+02	3.1191E+00	1.09120E-03	4.59915E-05	8.33581E-01
4.0300E+02	3.0880E+00	1.09305E-03	4.60305E-05	8.35767E-01
4.0500E+02	3.0575E+00	9.95050E-04	4.39635E-05	8.37757E-01
4.0700E+02	3.0273E+00	1.05270E-03	4.51905E-05	8.39863E-01
4.0900E+02	2.9977E+00	1.04620E-03	4.50540E-05	8.41955E-01
4.1100E+02	2.9684E+00	9.72150E-04	4.34670E-05	8.43899E-01
4.1300E+02	2.9396E+00	9.03450E-04	4.19405E-05	8.45706E-01
4.1500E+02	2.9112E+00	9.40750E-04	4.27760E-05	8.47588E-01
4.1700E+02	2.8832E+00	9.94000E-04	4.39410E-05	8.49576E-01
4.1900E+02	2.8556E+00	9.46450E-04	4.29015E-05	8.51469E-01
4.2100E+02	2.8284E+00	1.01635E-03	4.44210E-05	8.53501E-01
4.2300E+02	2.8016E+00	9.61550E-04	4.32340E-05	8.55425E-01
4.2500E+02	2.7752E+00	8.20250E-04	4.00130E-05	8.57065E-01
4.2700E+02	2.7492E+00	7.94100E-04	3.93885E-05	8.58653E-01
4.2900E+02	2.7235E+00	8.57100E-04	4.08785E-05	8.60367E-01
4.3100E+02	2.6982E+00	8.15350E-04	3.98975E-05	8.61998E-01
4.3300E+02	2.6732E+00	1.00065E-03	4.40840E-05	8.63999E-01
4.3500E+02	2.6486E+00	9.75500E-04	4.35395E-05	8.65950E-01
4.3700E+02	2.6243E+00	9.75000E-04	4.35285E-05	8.67900E-01
4.3900E+02	2.6003E+00	9.88050E-04	4.38125E-05	8.69877E-01
4.4100E+02	2.5767E+00	8.61600E-04	4.09825E-05	8.71600E-01
4.4300E+02	2.5534E+00	8.81100E-04	4.14310E-05	8.73362E-01
4.4500E+02	2.5304E+00	8.23350E-04	4.00875E-05	8.75009E-01
4.4700E+02	2.5077E+00	8.18750E-04	3.99775E-05	8.76646E-01
4.4900E+02	2.4853E+00	7.79950E-04	3.90460E-05	8.78206E-01
4.5100E+02	2.4632E+00	8.32600E-04	4.03050E-05	8.79871E-01
4.5300E+02	2.4414E+00	8.48550E-04	4.06790E-05	8.81568E-01
4.5500E+02	2.4199E+00	8.48850E-04	4.06865E-05	8.83266E-01
4.5700E+02	2.3987E+00	8.05000E-04	3.96500E-05	8.84876E-01
4.5900E+02	2.3778E+00	8.76750E-04	4.13320E-05	8.86630E-01
4.6100E+02	2.3571E+00	7.51550E-04	3.83495E-05	8.88133E-01
4.6300E+02	2.3367E+00	8.06800E-04	3.96940E-05	8.89746E-01
4.6500E+02	2.3166E+00	7.73400E-04	3.88870E-05	8.91293E-01

4.6700E+02	2.2967E+00	7.16800E-04	3.74800E-05	8.92727E-01
4.6900E+02	2.2771E+00	7.15150E-04	3.74385E-05	8.94157E-01
4.7100E+02	2.2577E+00	7.34150E-04	3.79165E-05	8.95625E-01
4.7300E+02	2.2386E+00	6.62500E-04	3.60790E-05	8.96950E-01
4.7500E+02	2.2197E+00	6.03450E-04	3.44920E-05	8.98157E-01
4.7700E+02	2.2011E+00	7.07100E-04	3.72340E-05	8.99571E-01
4.7900E+02	2.1827E+00	7.14800E-04	3.74295E-05	9.01001E-01
4.8100E+02	2.1645E+00	6.49100E-04	3.57250E-05	9.02299E-01
4.8300E+02	2.1466E+00	6.06900E-04	3.45870E-05	9.03513E-01
4.8500E+02	2.1288E+00	5.84100E-04	3.39555E-05	9.04681E-01
4.8700E+02	2.1113E+00	5.87850E-04	3.40600E-05	9.05857E-01
4.8900E+02	2.0940E+00	5.92100E-04	3.41775E-05	9.07041E-01
4.9100E+02	2.0770E+00	5.21100E-04	3.21465E-05	9.08083E-01
4.9300E+02	2.0601E+00	5.70600E-04	3.35755E-05	9.09224E-01
4.9500E+02	2.0434E+00	4.85925E-04	3.10910E-05	9.10196E-01
4.9700E+02	2.0270E+00	5.40950E-04	3.27275E-05	9.11278E-01
4.9900E+02	2.0107E+00	4.76620E-04	3.08055E-05	9.12231E-01
5.0100E+02	1.9946E+00	4.69385E-04	3.05820E-05	9.13170E-01
5.0300E+02	1.9787E+00	5.08550E-04	3.17730E-05	9.14187E-01
5.0500E+02	1.9630E+00	4.60030E-04	3.02900E-05	9.15107E-01
5.0700E+02	1.9475E+00	4.41155E-04	2.96930E-05	9.15990E-01

Aluminum 1.6 m.f.p.

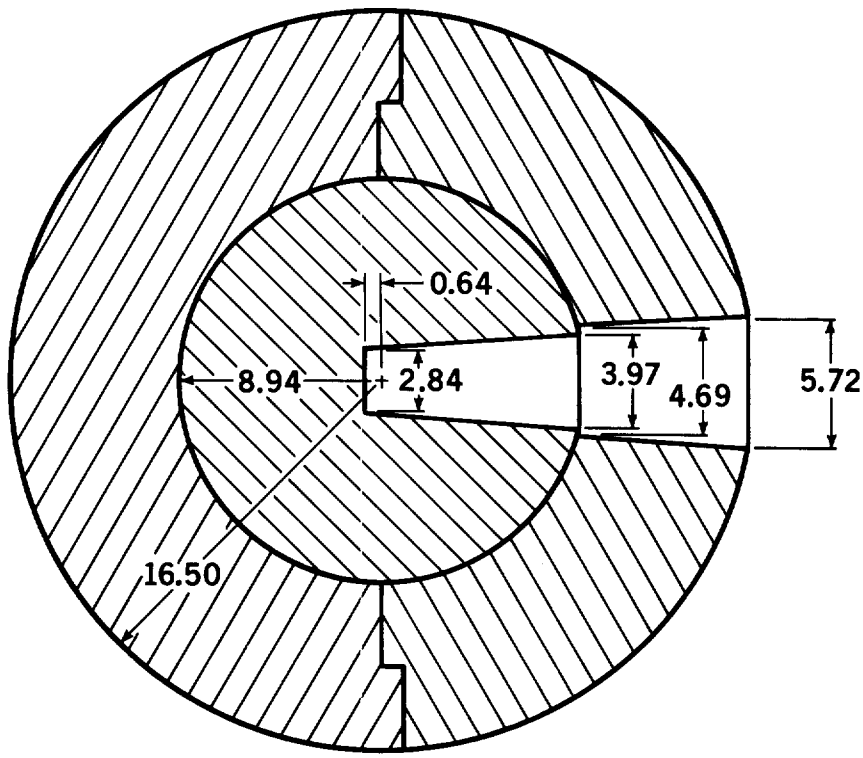

All Dimensions in Centimeters

$\rho = 2.70\ g/cm^3$

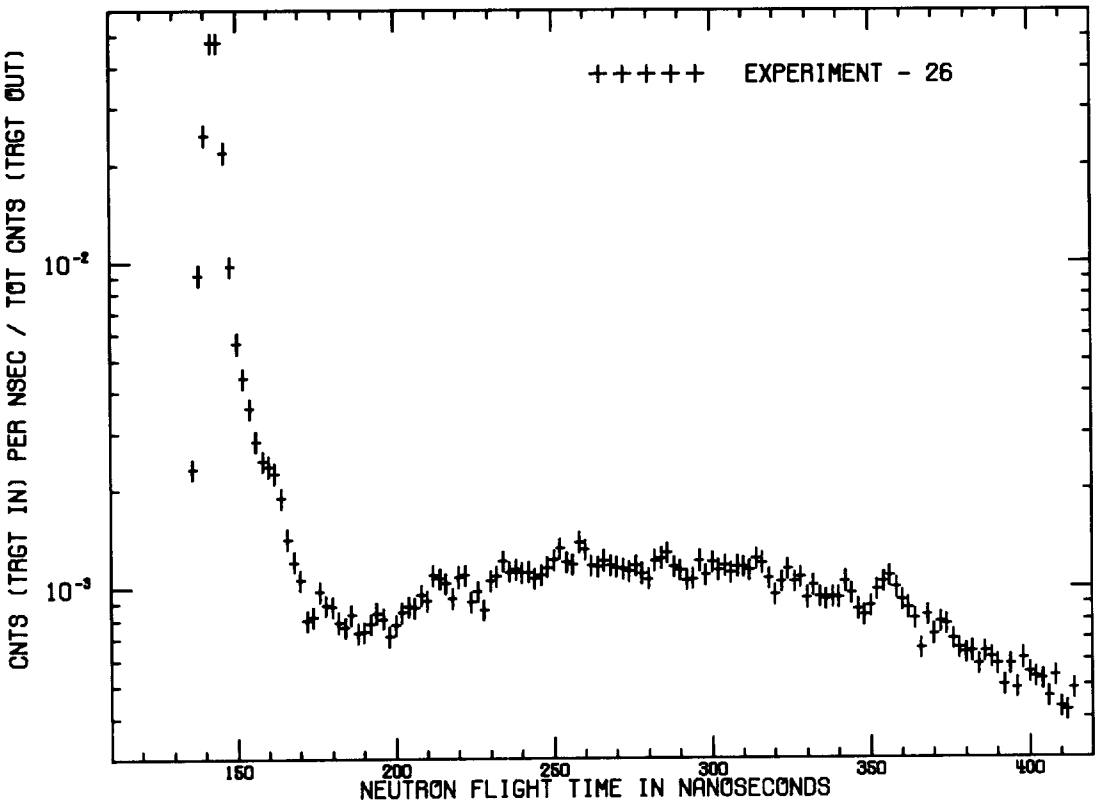

ALUMINUM - 1.6 M.F.P. - 30 DEG.

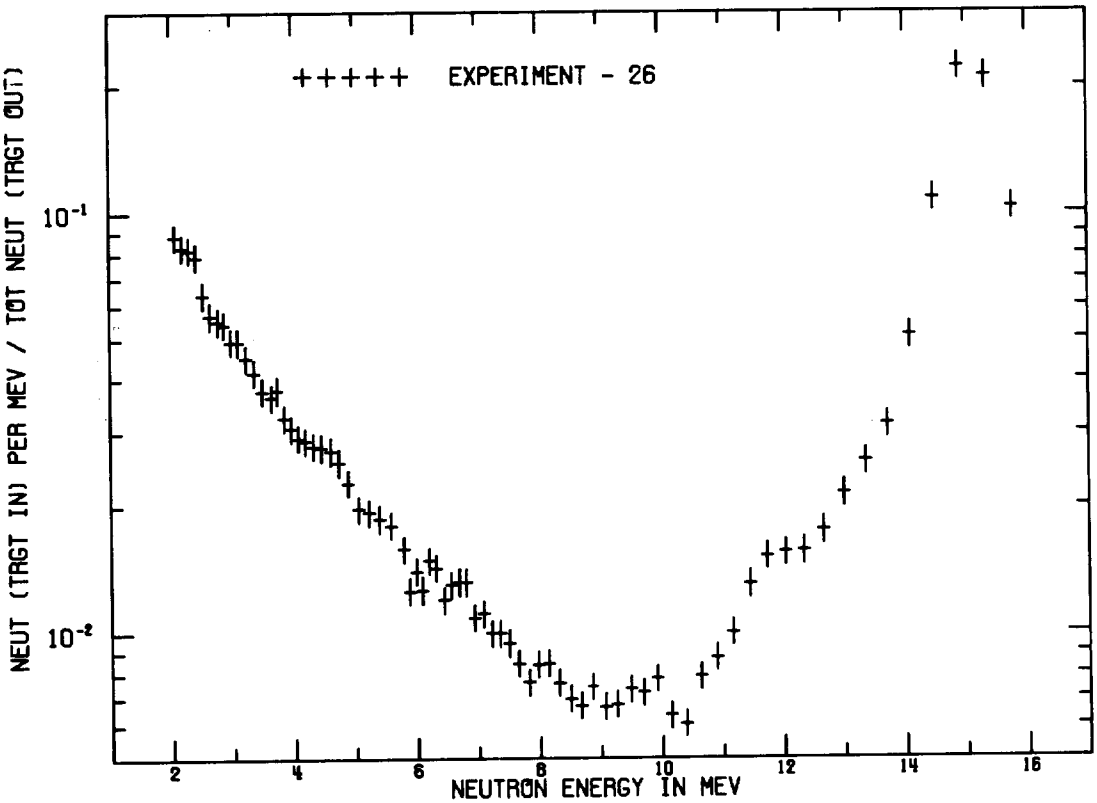

ALUMINUM - 1.6 M.F.P. - 30 DEG.

ALUMINUM - 1.6 M.F.P. - 30 DEG.
FLIGHTPATH = 765.20 CM DETECTOR = PILOT B FWHM = 4 NS

TIME(NS)	CALCULATED ENERGY(MEV)	CNT/NS/SOURCE	ERROR	INTEGRAL
1.3500E+02	1.7255E+01	4.19590E-04	2.90000E-05	8.39180E-04
1.3700E+02	1.6741E+01	2.31305E-03	5.93300E-05	5.46528E-03
1.3900E+02	1.6250E+01	9.15700E-03	1.14910E-04	2.37793E-02
1.4100E+02	1.5781E+01	2.47410E-02	1.87765E-04	7.32613E-02
1.4300E+02	1.5332E+01	4.77885E-02	2.60515E-04	1.68838E-01
1.4500E+02	1.4902E+01	4.76505E-02	2.60140E-04	2.64139E-01
1.4700E+02	1.4490E+01	2.18820E-02	1.76665E-04	3.07903E-01
1.4900E+02	1.4095E+01	9.75150E-03	1.18515E-04	3.27406E-01
1.5100E+02	1.3716E+01	5.65950E-03	9.08600E-05	3.38725E-01
1.5300E+02	1.3352E+01	4.41870E-03	8.06200E-05	3.47563E-01
1.5500E+02	1.3002E+01	3.57285E-03	7.28200E-05	3.54708E-01
1.5700E+02	1.2666E+01	2.82775E-03	6.51800E-05	3.60364E-01
1.5900E+02	1.2343E+01	2.44785E-03	6.09200E-05	3.65260E-01
1.6100E+02	1.2033E+01	2.36535E-03	5.99500E-05	3.69990E-01
1.6300E+02	1.1734E+01	2.25365E-03	5.86200E-05	3.74498E-01
1.6500E+02	1.1446E+01	1.88645E-03	5.40050E-05	3.78270E-01
1.6700E+02	1.1169E+01	1.41510E-03	4.74305E-05	3.81101E-01
1.6900E+02	1.0901E+01	1.20415E-03	4.41720E-05	3.83509E-01
1.7100E+02	1.0643E+01	1.05845E-03	4.17735E-05	3.85626E-01
1.7300E+02	1.0395E+01	7.97450E-04	3.70905E-05	3.87221E-01
1.7500E+02	1.0154E+01	8.17000E-04	3.74615E-05	3.88855E-01
1.7700E+02	9.9227E+00	9.76400E-04	4.03600E-05	3.90808E-01
1.7900E+02	9.6987E+00	8.84050E-04	3.87070E-05	3.92576E-01
1.8100E+02	9.4824E+00	8.77900E-04	3.85945E-05	3.94331E-01
1.8300E+02	9.2732E+00	7.87150E-04	3.68935E-05	3.95906E-01
1.8500E+02	9.0708E+00	7.60650E-04	3.63815E-05	3.97427E-01
1.8700E+02	8.8751E+00	8.28800E-04	3.76835E-05	3.99085E-01
1.8900E+02	8.6857E+00	7.27450E-04	3.57300E-05	4.00540E-01
1.9100E+02	8.5023E+00	7.32900E-04	3.58380E-05	4.02005E-01
1.9300E+02	8.3246E+00	7.79050E-04	3.67375E-05	4.03563E-01
1.9500E+02	8.1525E+00	8.39550E-04	3.78850E-05	4.05243E-01
1.9700E+02	7.9857E+00	8.07650E-04	3.72840E-05	4.06858E-01
1.9900E+02	7.8240E+00	7.11700E-04	3.54170E-05	4.08281E-01
2.0100E+02	7.6672E+00	7.70900E-04	3.65800E-05	4.09823E-01
2.0300E+02	7.5150E+00	8.44400E-04	3.79750E-05	4.11512E-01
2.0500E+02	7.3674E+00	8.76450E-04	3.85675E-05	4.13265E-01
2.0700E+02	7.2241E+00	8.69250E-04	3.84355E-05	4.15003E-01
2.0900E+02	7.0849E+00	9.55950E-04	3.99995E-05	4.16915E-01
2.1100E+02	6.9498E+00	9.17300E-04	3.93100E-05	4.18750E-01
2.1300E+02	6.8184E+00	1.09265E-03	4.23485E-05	4.20935E-01
2.1500E+02	6.6908E+00	1.07030E-03	4.19735E-05	4.23076E-01
2.1700E+02	6.5668E+00	1.03470E-03	4.13685E-05	4.25145E-01
2.1900E+02	6.4461E+00	9.30650E-04	3.95495E-05	4.27006E-01
2.2100E+02	6.3288E+00	1.08055E-03	4.21455E-05	4.29167E-01
2.2300E+02	6.2147E+00	1.09635E-03	4.24105E-05	4.31360E-01

2.2500E+02	6.1036E+00	9.08250E-04	3.91465E-05	4.33177E-01
2.2700E+02	5.9955E+00	9.79450E-04	4.04135E-05	4.35136E-01
2.2900E+02	5.8903E+00	8.57050E-04	3.82105E-05	4.36850E-01
2.3100E+02	5.7878E+00	1.04880E-03	4.16095E-05	4.38947E-01
2.3300E+02	5.6879E+00	1.08630E-03	4.22420E-05	4.41120E-01
2.3500E+02	5.5907E+00	1.20970E-03	4.42610E-05	4.43539E-01
2.3700E+02	5.4959E+00	1.11860E-03	4.27795E-05	4.45776E-01
2.3900E+02	5.4035E+00	1.14360E-03	4.31910E-05	4.48064E-01
2.4100E+02	5.3134E+00	1.11515E-03	4.27230E-05	4.50294E-01
2.4300E+02	5.2256E+00	1.11860E-03	4.27795E-05	4.52531E-01
2.4500E+02	5.1399E+00	1.06690E-03	4.19160E-05	4.54665E-01
2.4700E+02	5.0564E+00	1.09820E-03	4.24410E-05	4.56861E-01
2.4900E+02	4.9748E+00	1.15590E-03	4.33925E-05	4.59173E-01
2.5100E+02	4.8952E+00	1.21740E-03	4.43835E-05	4.61608E-01
2.5300E+02	4.8175E+00	1.32250E-03	4.60290E-05	4.64253E-01
2.5500E+02	4.7417E+00	1.20105E-03	4.41225E-05	4.66655E-01
2.5700E+02	4.6676E+00	1.17610E-03	4.37205E-05	4.69007E-01
2.5900E+02	4.5953E+00	1.38040E-03	4.69100E-05	4.71768E-01
2.6100E+02	4.5246E+00	1.30665E-03	4.57845E-05	4.74381E-01
2.6300E+02	4.4556E+00	1.16730E-03	4.35775E-05	4.76716E-01
2.6500E+02	4.3881E+00	1.15770E-03	4.34220E-05	4.79031E-01
2.6700E+02	4.3222E+00	1.21265E-03	4.43080E-05	4.81457E-01
2.6900E+02	4.2577E+00	1.16960E-03	4.36145E-05	4.83796E-01
2.7100E+02	4.1947E+00	1.15570E-03	4.33885E-05	4.86107E-01
2.7300E+02	4.1330E+00	1.13910E-03	4.31170E-05	4.88385E-01
2.7500E+02	4.0728E+00	1.12360E-03	4.28620E-05	4.90633E-01
2.7700E+02	4.0138E+00	1.16580E-03	4.35535E-05	4.92964E-01
2.7900E+02	3.9561E+00	1.10775E-03	4.26005E-05	4.95180E-01
2.8100E+02	3.8996E+00	1.06480E-03	4.18810E-05	4.97309E-01
2.8300E+02	3.8443E+00	1.21140E-03	4.42880E-05	4.99732E-01
2.8500E+02	3.7903E+00	1.23140E-03	4.46060E-05	5.02195E-01
2.8700E+02	3.7373E+00	1.27655E-03	4.53170E-05	5.04748E-01
2.8900E+02	3.6854E+00	1.15960E-03	4.34520E-05	5.07067E-01
2.9100E+02	3.6347E+00	1.13005E-03	4.29690E-05	5.09327E-01
2.9300E+02	3.5849E+00	1.05645E-03	4.17390E-05	5.11440E-01
2.9500E+02	3.5362E+00	1.06560E-03	4.18945E-05	5.13571E-01
2.9700E+02	3.4885E+00	1.21155E-03	4.42905E-05	5.15995E-01
2.9900E+02	3.4417E+00	1.09435E-03	4.23765E-05	5.18183E-01
3.0100E+02	3.3959E+00	1.19760E-03	4.40670E-05	5.20578E-01
3.0300E+02	3.3510E+00	1.13585E-03	4.30645E-05	5.22850E-01
3.0500E+02	3.3069E+00	1.17095E-03	4.36370E-05	5.25192E-01
3.0700E+02	3.2638E+00	1.11235E-03	4.26765E-05	5.27417E-01
3.0900E+02	3.2214E+00	1.16365E-03	4.35185E-05	5.29744E-01
3.1100E+02	3.1799E+00	1.15920E-03	4.34465E-05	5.32062E-01
3.1300E+02	3.1392E+00	1.13250E-03	4.30095E-05	5.34327E-01
3.1500E+02	3.0993E+00	1.22415E-03	4.44910E-05	5.36776E-01
3.1700E+02	3.0601E+00	1.19240E-03	4.39830E-05	5.39161E-01
3.1900E+02	3.0217E+00	1.06605E-03	4.19015E-05	5.41293E-01

3.2100E+02	2.9840E+00	9.54950E-04	3.99820E-05	5.43203E-01
3.2300E+02	2.9469E+00	1.04205E-03	4.14945E-05	5.45287E-01
3.2500E+02	2.9106E+00	1.14100E-03	4.31490E-05	5.47569E-01
3.2700E+02	2.8750E+00	1.04335E-03	4.15165E-05	5.49655E-01
3.2900E+02	2.8399E+00	1.07795E-03	4.21020E-05	5.51811E-01
3.3100E+02	2.8056E+00	9.33700E-04	3.96035E-05	5.53679E-01
3.3300E+02	2.7718E+00	1.01850E-03	4.10910E-05	5.55716E-01
3.3500E+02	2.7387E+00	9.39650E-04	3.97100E-05	5.57595E-01
3.3700E+02	2.7061E+00	9.22450E-04	3.94025E-05	5.59440E-01
3.3900E+02	2.6742E+00	9.38850E-04	3.96955E-05	5.61318E-01
3.4100E+02	2.6428E+00	9.34450E-04	3.96175E-05	5.63186E-01
3.4300E+02	2.6119E+00	1.04710E-03	4.15805E-05	5.65281E-01
3.4500E+02	2.5816E+00	9.63350E-04	4.01300E-05	5.67207E-01
3.4700E+02	2.5518E+00	8.61050E-04	3.82845E-05	5.68929E-01
3.4900E+02	2.5225E+00	8.22550E-04	3.75660E-05	5.70575E-01
3.5100E+02	2.4937E+00	8.81150E-04	3.86540E-05	5.72337E-01
3.5300E+02	2.4654E+00	9.85050E-04	4.05110E-05	5.74307E-01
3.5500E+02	2.4376E+00	1.04130E-03	4.14820E-05	5.76390E-01
3.5700E+02	2.4103E+00	1.08520E-03	4.22240E-05	5.78560E-01
3.5900E+02	2.3834E+00	1.00040E-03	4.07775E-05	5.80561E-01
3.6100E+02	2.3570E+00	9.13150E-04	3.92350E-05	5.82387E-01
3.6300E+02	2.3310E+00	8.67500E-04	3.84030E-05	5.84122E-01
3.6500E+02	2.3054E+00	8.01350E-04	3.71640E-05	5.85725E-01
3.6700E+02	2.2803E+00	6.51300E-04	3.41890E-05	5.87027E-01
3.6900E+02	2.2555E+00	8.22550E-04	3.75655E-05	5.88672E-01
3.7100E+02	2.2312E+00	7.19900E-04	3.55800E-05	5.90112E-01
3.7300E+02	2.2072E+00	7.84300E-04	3.68380E-05	5.91681E-01
3.7500E+02	2.1837E+00	7.71950E-04	3.66010E-05	5.93225E-01
3.7700E+02	2.1605E+00	6.91850E-04	3.50180E-05	5.94608E-01
3.7900E+02	2.1377E+00	6.48150E-04	3.41230E-05	5.95905E-01
3.8100E+02	2.1152E+00	6.27850E-04	3.37000E-05	5.97160E-01
3.8300E+02	2.0931E+00	6.36200E-04	3.38755E-05	5.98433E-01
3.8500E+02	2.0713E+00	5.81300E-04	3.27080E-05	5.99595E-01
3.8700E+02	2.0499E+00	6.33900E-04	3.38270E-05	6.00863E-01
3.8900E+02	2.0288E+00	6.09700E-04	3.33170E-05	6.02083E-01
3.9100E+02	2.0080E+00	5.80100E-04	3.26820E-05	6.03243E-01
3.9300E+02	1.9876E+00	5.00900E-04	3.09205E-05	6.04245E-01
3.9500E+02	1.9675E+00	5.79000E-04	3.26585E-05	6.05403E-01
3.9700E+02	1.9476E+00	4.91240E-04	3.06985E-05	6.06385E-01
3.9900E+02	1.9281E+00	6.06100E-04	3.32405E-05	6.07597E-01
4.0100E+02	1.9088E+00	5.47900E-04	3.19770E-05	6.08693E-01
4.0300E+02	1.8899E+00	5.30600E-04	3.15925E-05	6.09754E-01
4.0500E+02	1.8712E+00	5.21050E-04	3.13775E-05	6.10796E-01
4.0700E+02	1.8528E+00	4.60745E-04	2.99875E-05	6.11718E-01
4.0900E+02	1.8347E+00	5.33000E-04	3.16465E-05	6.12784E-01
4.1100E+02	1.8168E+00	4.28035E-04	2.92055E-05	6.13640E-01
4.1300E+02	1.7992E+00	4.17915E-04	2.89590E-05	6.14476E-01
4.1500E+02	1.7819E+00	4.87885E-04	3.06210E-05	6.15452E-01

Aluminum 2.6 m.f.p.

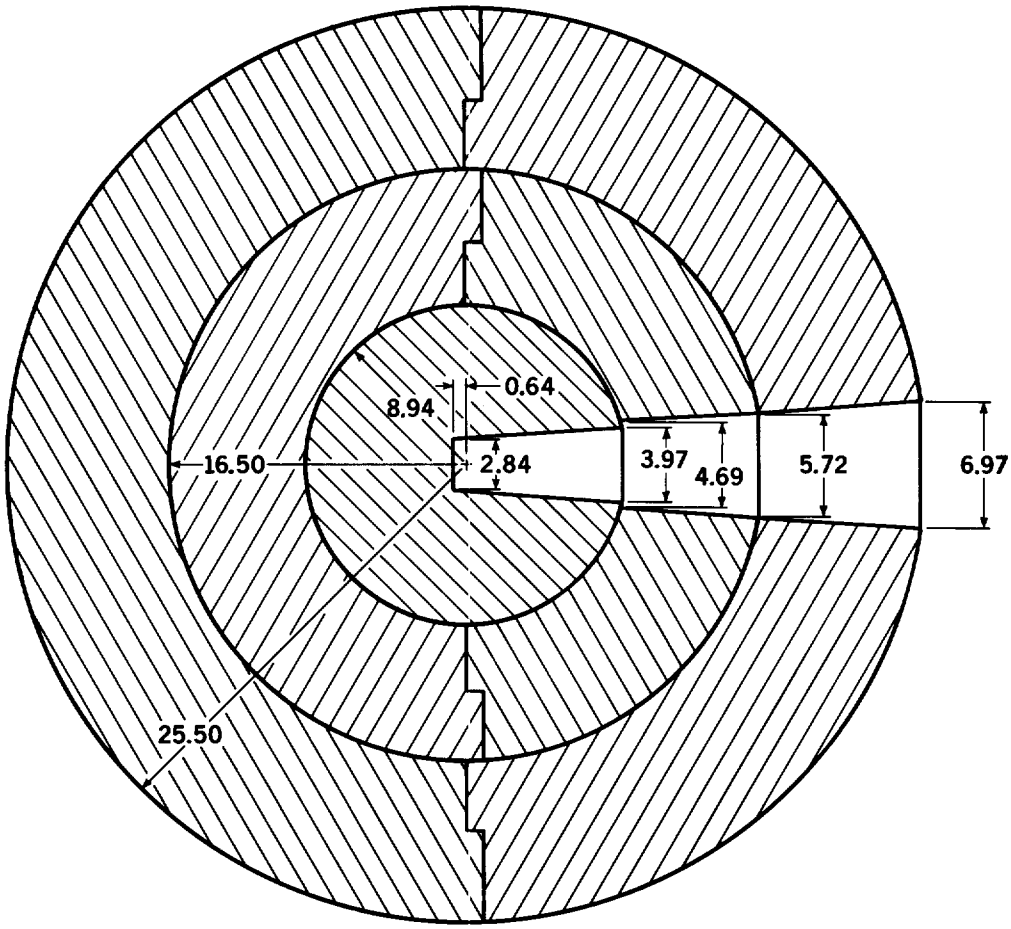

All Dimensions in Centimeters

$\rho = 2.70\ g/cm^3$

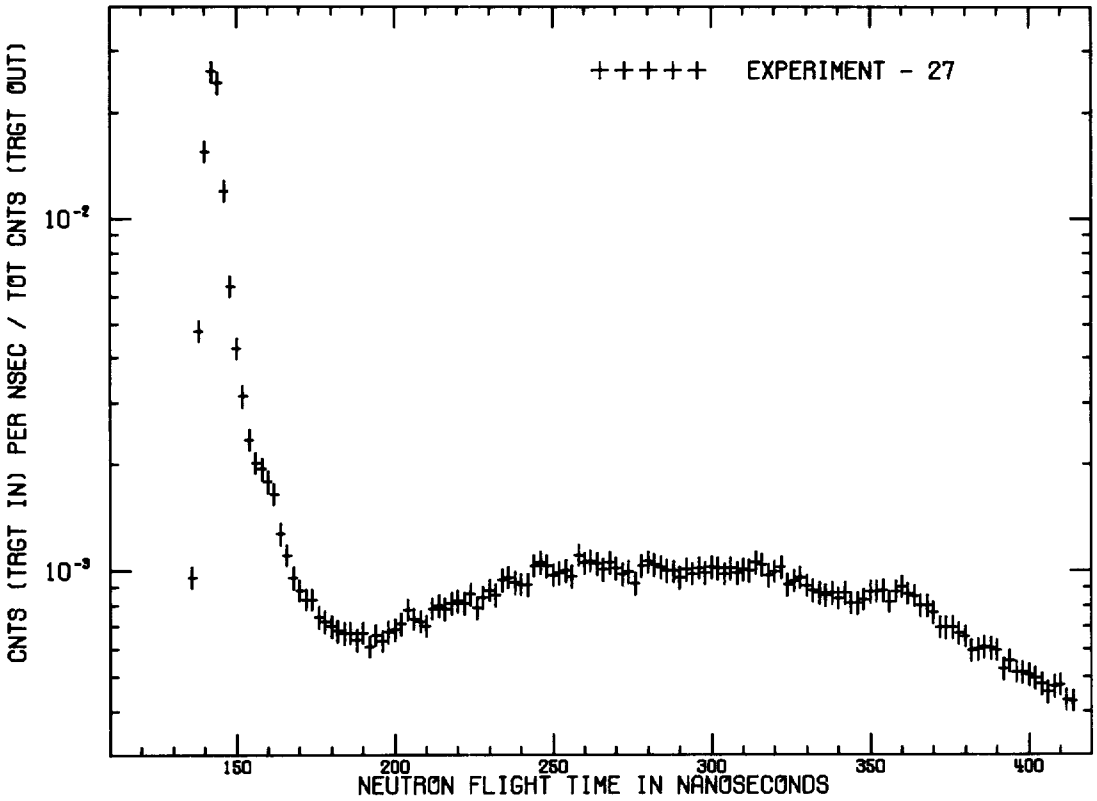

ALUMINUM - 2.6 M.F.P. - 30 DEG.

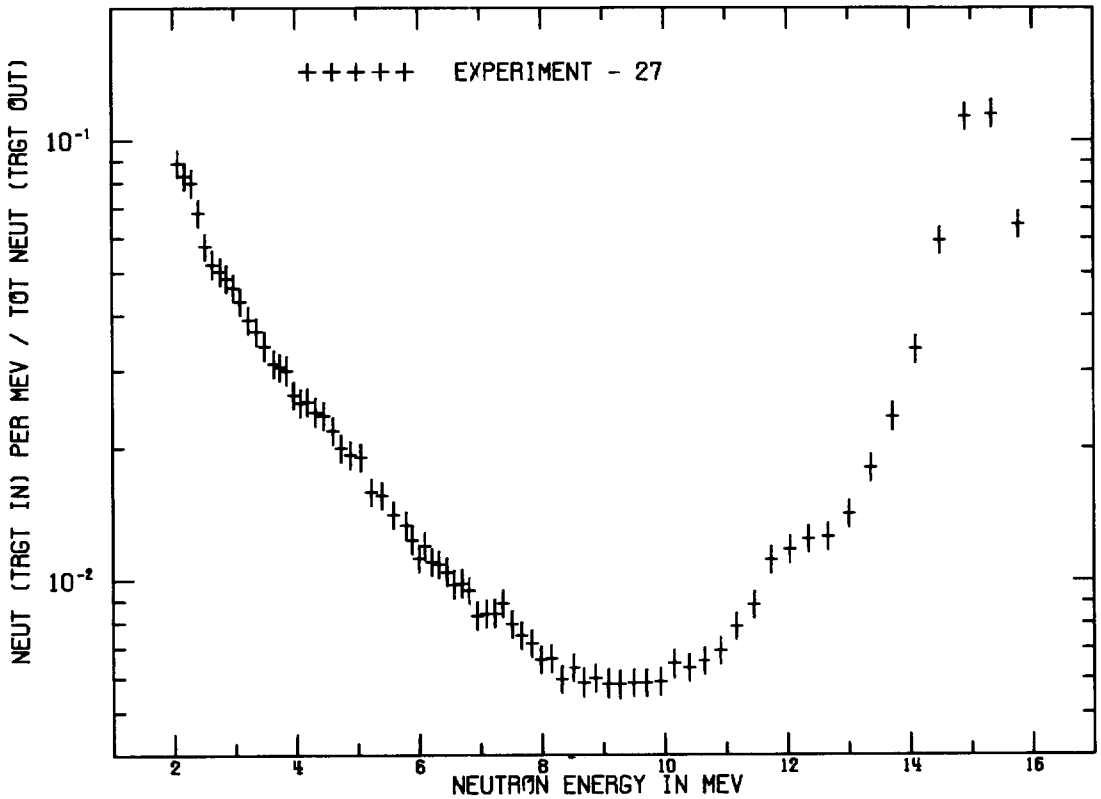

ALUMINUM - 2.6 M.F.P. - 30 DEG.

ALUMINUM - 2.6 M.F.P. - 30 DEG.
FLIGHTPATH = 765.20 CM DETECTOR = PILOT B FWHM = 4 NS

TIME(NS)	CALCULATED ENERGY(MEV)	CNT/NS/SOURCE	ERROR	INTEGRAL
1.3500E+02	1.7255E+01	1.49970E-04	1.66010E-05	2.99940E-04
1.3700E+02	1.6741E+01	9.59150E-04	2.93795E-05	2.21824E-03
1.3900E+02	1.6250E+01	4.78435E-03	6.03400E-05	1.17869E-02
1.4100E+02	1.5781E+01	1.55020E-02	1.06880E-04	4.27909E-02
1.4300E+02	1.5332E+01	2.61420E-02	1.38380E-04	9.50749E-02
1.4500E+02	1.4902E+01	2.43180E-02	1.33510E-04	1.43711E-01
1.4700E+02	1.4490E+01	1.19975E-02	9.42250E-05	1.67706E-01
1.4900E+02	1.4095E+01	6.41450E-03	6.94600E-05	1.80535E-01
1.5100E+02	1.3716E+01	4.27115E-03	5.71650E-05	1.89077E-01
1.5300E+02	1.3352E+01	3.12385E-03	4.93460E-05	1.95325E-01
1.5500E+02	1.3002E+01	2.35760E-03	4.33430E-05	2.00040E-01
1.5700E+02	1.2666E+01	2.02675E-03	4.04765E-05	2.04094E-01
1.5900E+02	1.2343E+01	1.94385E-03	3.97260E-05	2.07981E-01
1.6100E+02	1.2033E+01	1.79290E-03	3.83220E-05	2.11567E-01
1.6300E+02	1.1734E+01	1.65220E-03	3.69650E-05	2.14872E-01
1.6500E+02	1.1446E+01	1.27405E-03	3.30425E-05	2.17420E-01
1.6700E+02	1.1169E+01	1.10935E-03	3.11805E-05	2.19638E-01
1.6900E+02	1.0901E+01	9.56150E-04	2.93425E-05	2.21551E-01
1.7100E+02	1.0643E+01	8.83600E-04	2.84305E-05	2.23318E-01
1.7300E+02	1.0395E+01	8.31550E-04	2.77585E-05	2.24981E-01
1.7500E+02	1.0154E+01	8.32950E-04	2.77760E-05	2.26647E-01
1.7700E+02	9.9227E+00	7.40150E-04	2.65360E-05	2.28127E-01
1.7900E+02	9.6987E+00	7.18050E-04	2.62315E-05	2.29563E-01
1.8100E+02	9.4824E+00	6.98500E-04	2.59595E-05	2.30960E-01
1.8300E+02	9.2732E+00	6.76950E-04	2.56560E-05	2.32314E-01
1.8500E+02	9.0708E+00	6.65850E-04	2.54985E-05	2.33646E-01
1.8700E+02	8.8751E+00	6.69400E-04	2.55495E-05	2.34985E-01
1.8900E+02	8.6857E+00	6.36950E-04	2.50840E-05	2.36259E-01
1.9100E+02	8.5023E+00	6.68150E-04	2.55315E-05	2.37595E-01
1.9300E+02	8.3246E+00	6.10300E-04	2.46955E-05	2.38815E-01
1.9500E+02	8.1525E+00	6.59500E-04	2.54085E-05	2.40134E-01
1.9700E+02	7.9857E+00	6.35050E-04	2.50565E-05	2.41405E-01
1.9900E+02	7.8240E+00	6.71600E-04	2.55805E-05	2.42748E-01
2.0100E+02	7.6672E+00	6.81650E-04	2.57225E-05	2.44111E-01
2.0300E+02	7.5150E+00	7.09150E-04	2.61080E-05	2.45529E-01
2.0500E+02	7.3674E+00	7.76700E-04	2.70310E-05	2.47083E-01
2.0700E+02	7.2241E+00	7.32750E-04	2.64345E-05	2.48548E-01
2.0900E+02	7.0849E+00	7.20650E-04	2.62670E-05	2.49990E-01
2.1100E+02	6.9498E+00	7.00600E-04	2.59890E-05	2.51391E-01
2.1300E+02	6.8184E+00	7.83750E-04	2.71255E-05	2.52958E-01
2.1500E+02	6.6908E+00	7.98150E-04	2.73175E-05	2.54555E-01
2.1700E+02	6.5668E+00	7.78850E-04	2.70600E-05	2.56112E-01
2.1900E+02	6.4461E+00	8.11550E-04	2.74950E-05	2.57735E-01
2.2100E+02	6.3288E+00	8.22500E-04	2.76395E-05	2.59380E-01
2.2300E+02	6.2147E+00	8.11950E-04	2.75005E-05	2.61004E-01

2.2500E+02	6.1036E+00	8.59950E-04	2.81270E-05	2.62724E-01
2.2700E+02	5.9955E+00	7.85000E-04	2.71425E-05	2.64294E-01
2.2900E+02	5.8903E+00	8.43350E-04	2.79120E-05	2.65981E-01
2.3100E+02	5.7878E+00	8.84050E-04	2.84365E-05	2.67749E-01
2.3300E+02	5.6879E+00	8.55300E-04	2.80670E-05	2.69460E-01
2.3500E+02	5.5907E+00	9.43050E-04	2.91800E-05	2.71346E-01
2.3700E+02	5.4959E+00	9.60750E-04	2.93995E-05	2.73267E-01
2.3900E+02	5.4035E+00	9.27900E-04	2.89905E-05	2.75123E-01
2.4100E+02	5.3134E+00	9.17100E-04	2.88555E-05	2.76957E-01
2.4300E+02	5.2256E+00	9.12750E-04	2.88005E-05	2.78783E-01
2.4500E+02	5.1399E+00	1.03555E-03	3.03090E-05	2.80854E-01
2.4700E+02	5.0564E+00	1.05395E-03	3.05285E-05	2.82962E-01
2.4900E+02	4.9748E+00	1.03260E-03	3.02735E-05	2.85027E-01
2.5100E+02	4.8952E+00	9.75250E-04	2.95780E-05	2.86977E-01
2.5300E+02	4.8175E+00	9.84050E-04	2.96855E-05	2.88945E-01
2.5500E+02	4.7417E+00	1.00290E-03	2.99135E-05	2.90951E-01
2.5700E+02	4.6676E+00	9.62250E-04	2.94180E-05	2.92876E-01
2.5900E+02	4.5953E+00	1.10765E-03	3.11605E-05	2.95091E-01
2.6100E+02	4.5246E+00	1.05295E-03	3.05170E-05	2.97197E-01
2.6300E+02	4.4556E+00	1.06690E-03	3.06820E-05	2.99331E-01
2.6500E+02	4.3881E+00	1.04805E-03	3.04585E-05	3.01427E-01
2.6700E+02	4.3222E+00	1.00820E-03	2.99795E-05	3.03443E-01
2.6900E+02	4.2577E+00	1.05465E-03	3.05370E-05	3.05553E-01
2.7100E+02	4.1947E+00	1.01415E-03	3.00515E-05	3.07581E-01
2.7300E+02	4.1330E+00	9.77600E-04	2.96065E-05	3.09536E-01
2.7500E+02	4.0728E+00	9.91650E-04	2.97785E-05	3.11519E-01
2.7700E+02	4.0138E+00	9.20150E-04	2.88935E-05	3.13360E-01
2.7900E+02	3.9561E+00	1.03220E-03	3.02685E-05	3.15424E-01
2.8100E+02	3.8996E+00	1.06090E-03	3.06115E-05	3.17546E-01
2.8300E+02	3.8443E+00	1.03950E-03	3.03565E-05	3.19625E-01
2.8500E+02	3.7903E+00	1.02300E-03	3.01585E-05	3.21671E-01
2.8700E+02	3.7373E+00	9.99200E-04	2.98705E-05	3.23669E-01
2.8900E+02	3.6854E+00	9.98700E-04	2.98645E-05	3.25667E-01
2.9100E+02	3.6347E+00	9.56200E-04	2.93435E-05	3.27579E-01
2.9300E+02	3.5849E+00	1.01025E-03	3.00045E-05	3.29600E-01
2.9500E+02	3.5362E+00	9.82150E-04	2.96620E-05	3.31564E-01
2.9700E+02	3.4885E+00	1.02060E-03	3.01295E-05	3.33605E-01
2.9900E+02	3.4417E+00	9.84400E-04	2.96900E-05	3.35574E-01
3.0100E+02	3.3959E+00	1.02260E-03	3.01535E-05	3.37619E-01
3.0300E+02	3.3510E+00	1.01535E-03	3.00660E-05	3.39650E-01
3.0500E+02	3.3069E+00	9.82600E-04	2.96680E-05	3.41615E-01
3.0700E+02	3.2638E+00	1.01700E-03	3.00860E-05	3.43649E-01
3.0900E+02	3.2214E+00	9.84300E-04	2.96890E-05	3.45618E-01
3.1100E+02	3.1799E+00	1.00715E-03	2.99670E-05	3.47632E-01
3.1300E+02	3.1392E+00	1.00335E-03	2.99210E-05	3.49639E-01
3.1500E+02	3.0993E+00	1.05305E-03	3.05180E-05	3.51745E-01
3.1700E+02	3.0601E+00	1.03730E-03	3.03300E-05	3.53819E-01
3.1900E+02	3.0217E+00	9.70950E-04	2.95255E-05	3.55761E-01

3.2100E+02	2.9840E+00	9.98500E-04	2.98615E-05	3.57758E-01
3.2300E+02	2.9469E+00	1.02420E-03	3.01725E-05	3.59807E-01
3.2500E+02	2.9106E+00	9.15750E-04	2.88385E-05	3.61638E-01
3.2700E+02	2.8750E+00	9.37650E-04	2.91130E-05	3.63513E-01
3.2900E+02	2.8399E+00	9.59950E-04	2.93895E-05	3.65433E-01
3.3100E+02	2.8056E+00	9.10300E-04	2.87695E-05	3.67254E-01
3.3300E+02	2.7718E+00	8.80700E-04	2.83935E-05	3.69015E-01
3.3500E+02	2.7387E+00	8.67650E-04	2.82265E-05	3.70751E-01
3.3700E+02	2.7061E+00	8.53100E-04	2.80385E-05	3.72457E-01
3.3900E+02	2.6742E+00	8.67000E-04	2.82175E-05	3.74191E-01
3.4100E+02	2.6428E+00	8.38750E-04	2.78520E-05	3.75868E-01
3.4300E+02	2.6119E+00	8.67000E-04	2.82180E-05	3.77602E-01
3.4500E+02	2.5816E+00	8.14350E-04	2.75325E-05	3.79231E-01
3.4700E+02	2.5518E+00	8.10750E-04	2.74845E-05	3.80852E-01
3.4900E+02	2.5225E+00	8.31700E-04	2.77600E-05	3.82516E-01
3.5100E+02	2.4937E+00	8.75200E-04	2.83230E-05	3.84266E-01
3.5300E+02	2.4654E+00	8.76350E-04	2.83380E-05	3.86019E-01
3.5500E+02	2.4376E+00	8.81650E-04	2.84055E-05	3.87782E-01
3.5700E+02	2.4103E+00	8.20600E-04	2.76140E-05	3.89423E-01
3.5900E+02	2.3834E+00	8.77450E-04	2.83520E-05	3.91178E-01
3.6100E+02	2.3570E+00	9.04550E-04	2.86970E-05	3.92987E-01
3.6300E+02	2.3310E+00	8.64700E-04	2.81885E-05	3.94717E-01
3.6500E+02	2.3054E+00	8.52000E-04	2.80240E-05	3.96421E-01
3.6700E+02	2.2803E+00	7.98400E-04	2.73205E-05	3.98018E-01
3.6900E+02	2.2555E+00	8.00250E-04	2.73455E-05	3.99618E-01
3.7100E+02	2.2312E+00	7.61750E-04	2.68295E-05	4.01142E-01
3.7300E+02	2.2072E+00	6.95150E-04	2.59125E-05	4.02532E-01
3.7500E+02	2.1837E+00	6.91700E-04	2.58640E-05	4.03915E-01
3.7700E+02	2.1605E+00	6.92100E-04	2.58700E-05	4.05300E-01
3.7900E+02	2.1377E+00	6.65950E-04	2.55000E-05	4.06631E-01
3.8100E+02	2.1152E+00	6.54500E-04	2.53365E-05	4.07940E-01
3.8300E+02	2.0931E+00	5.94350E-04	2.44600E-05	4.09129E-01
3.8500E+02	2.0713E+00	5.99800E-04	2.45405E-05	4.10329E-01
3.8700E+02	2.0499E+00	6.09150E-04	2.46785E-05	4.11547E-01
3.8900E+02	2.0288E+00	6.04400E-04	2.46085E-05	4.12756E-01
3.9100E+02	2.0080E+00	5.98050E-04	2.45145E-05	4.13952E-01
3.9300E+02	1.9876E+00	5.28550E-04	2.34625E-05	4.15009E-01
3.9500E+02	1.9675E+00	5.56900E-04	2.38975E-05	4.16123E-01
3.9700E+02	1.9476E+00	5.17200E-04	2.32860E-05	4.17157E-01
3.9900E+02	1.9281E+00	5.16000E-04	2.32680E-05	4.18189E-01
4.0100E+02	1.9088E+00	5.07350E-04	2.31325E-05	4.19204E-01
4.0300E+02	1.8899E+00	4.96485E-04	2.29610E-05	4.20197E-01
4.0500E+02	1.8712E+00	4.77555E-04	2.26595E-05	4.21152E-01
4.0700E+02	1.8528E+00	4.53885E-04	2.22770E-05	4.22060E-01
4.0900E+02	1.8347E+00	4.70000E-04	2.25385E-05	4.23000E-01
4.1100E+02	1.8168E+00	4.75730E-04	2.26305E-05	4.23951E-01
4.1300E+02	1.7992E+00	4.31945E-04	2.19170E-05	4.24815E-01
4.1500E+02	1.7819E+00	4.28410E-04	2.18580E-05	4.25672E-01

Titanium 1.2 m. f. p.

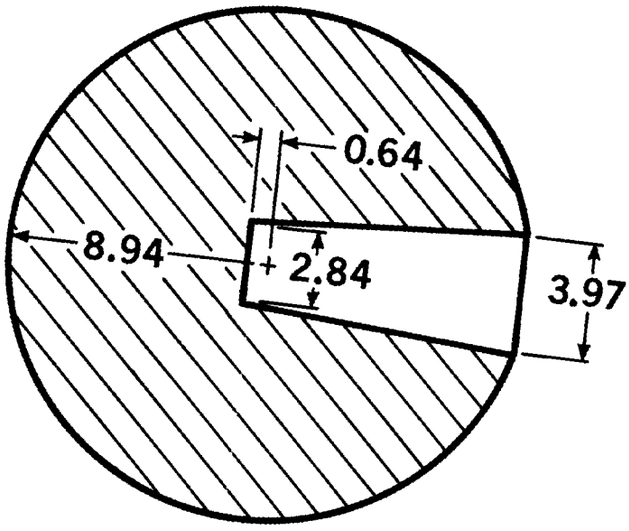

All Dimensions in Centimeters

$\rho = 4.54\ g/cm^3$

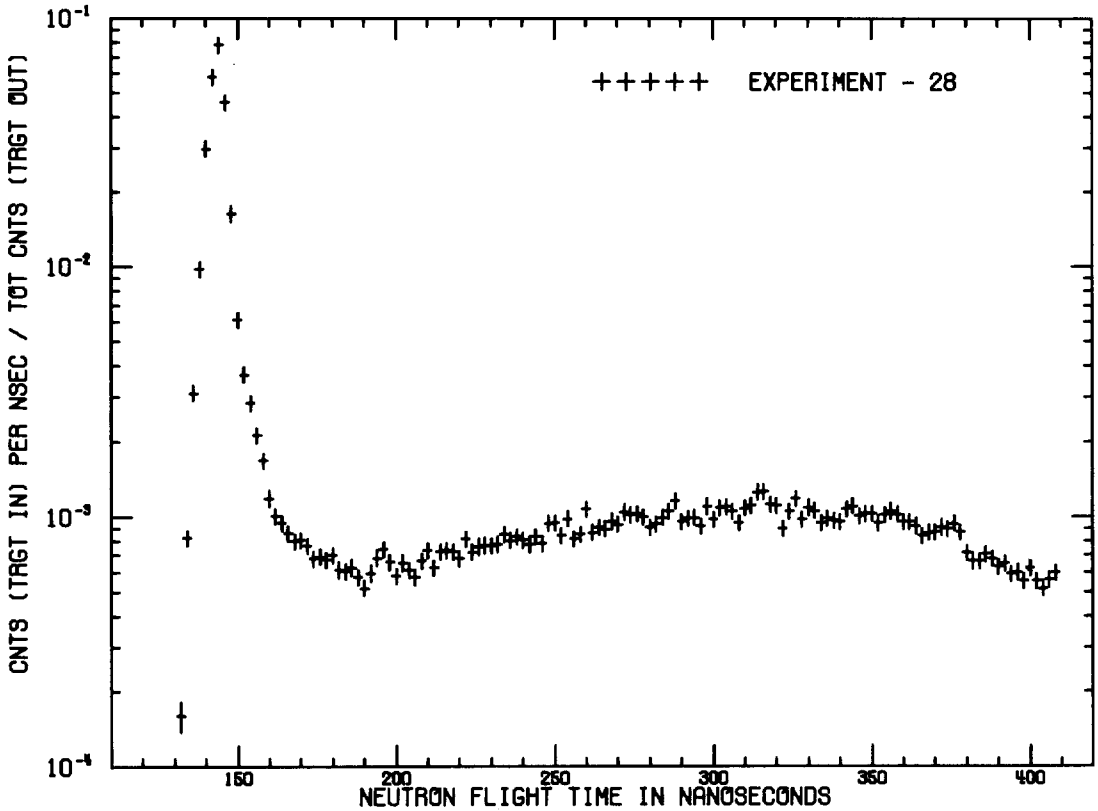

TITANIUM - 1.2 M.F.P. - 30 DEG.

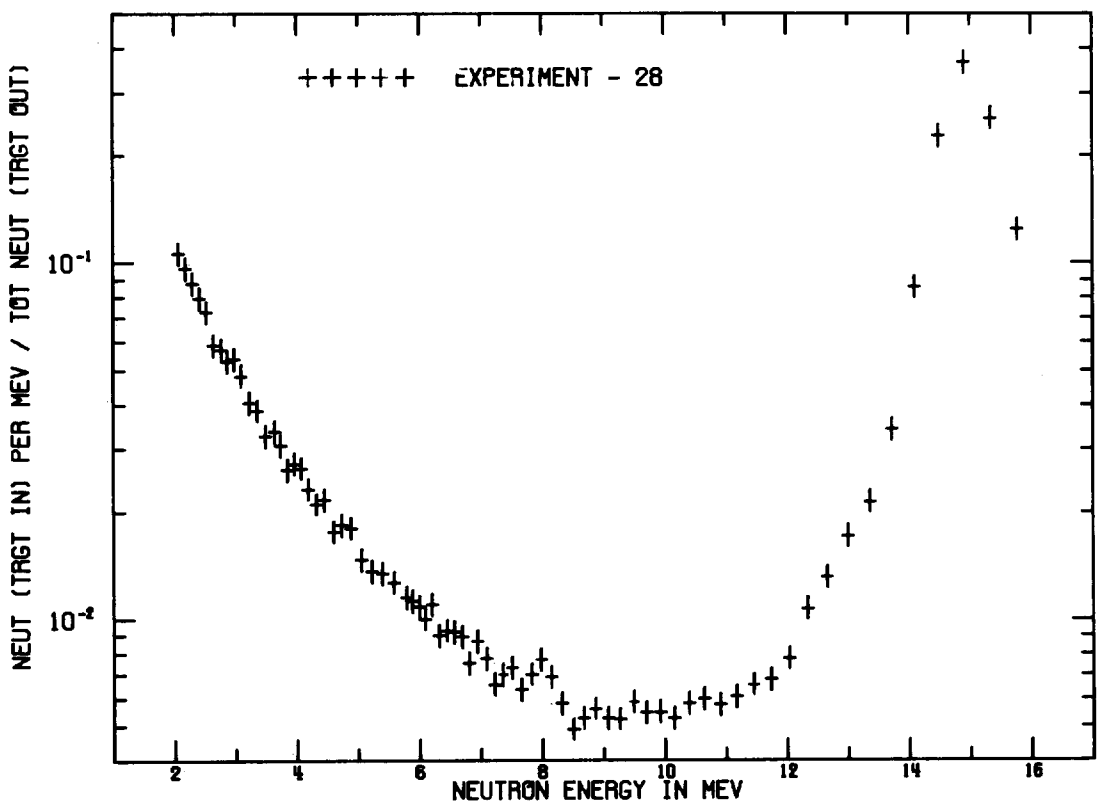

TITANIUM - 1.2 M.F.P. - 30 DEG.

TITANIUM - 1.2 M.F.P. - 30 DEG.
FLIGHTPATH = 765.20 CM DETECTOR = PILOT B FWHM = 4 NS

TIME(NS)	CALCULATED ENERGY(MEV)	CNT/NS/SOURCE	ERROR	INTEGRAL
1.3100E+02	1.8356E+01	8.46250E-05	1.90365E-05	1.69250E-04
1.3300E+02	1.7792E+01	1.59405E-04	2.16525E-05	4.88060E-04
1.3500E+02	1.7255E+01	8.23000E-04	3.75985E-05	2.13406E-03
1.3700E+02	1.6741E+01	3.12565E-03	6.85000E-05	8.38536E-03
1.3900E+02	1.6250E+01	9.79200E-03	1.19095E-04	2.79694E-02
1.4100E+02	1.5781E+01	2.98690E-02	2.06805E-04	8.77074E-02
1.4300E+02	1.5332E+01	5.78900E-02	2.87505E-04	2.03487E-01
1.4500E+02	1.4902E+01	7.83850E-02	3.34425E-04	3.60257E-01
1.4700E+02	1.4490E+01	4.60245E-02	2.56455E-04	4.52306E-01
1.4900E+02	1.4095E+01	1.64300E-02	1.53735E-04	4.85166E-01
1.5100E+02	1.3716E+01	6.15350E-03	9.48850E-05	4.97473E-01
1.5300E+02	1.3352E+01	3.70400E-03	7.42650E-05	5.04881E-01
1.5500E+02	1.3002E+01	2.85260E-03	6.56000E-05	5.10587E-01
1.5700E+02	1.2666E+01	2.11415E-03	5.70250E-05	5.14815E-01
1.5900E+02	1.2343E+01	1.67675E-03	5.12750E-05	5.18168E-01
1.6100E+02	1.2033E+01	1.18405E-03	4.39050E-05	5.20536E-01
1.6300E+02	1.1734E+01	1.00420E-03	4.08850E-05	5.22545E-01
1.6500E+02	1.1446E+01	9.45600E-04	3.98515E-05	5.24436E-01
1.6700E+02	1.1169E+01	8.56950E-04	3.82355E-05	5.26150E-01
1.6900E+02	1.0901E+01	7.93250E-04	3.70310E-05	5.27736E-01
1.7100E+02	1.0643E+01	8.06650E-04	3.72875E-05	5.29350E-01
1.7300E+02	1.0395E+01	7.62400E-04	3.64325E-05	5.30875E-01
1.7500E+02	1.0154E+01	6.77200E-04	3.47280E-05	5.32229E-01
1.7700E+02	9.9227E+00	6.90200E-04	3.49930E-05	5.33609E-01
1.7900E+02	9.6987E+00	6.72150E-04	3.46245E-05	5.34954E-01
1.8100E+02	9.4824E+00	7.01800E-04	3.52285E-05	5.36357E-01
1.8300E+02	9.2732E+00	6.12250E-04	3.33705E-05	5.37582E-01
1.8500E+02	9.0708E+00	6.01300E-04	3.31360E-05	5.38784E-01
1.8700E+02	8.8751E+00	6.25050E-04	3.36425E-05	5.40034E-01
1.8900E+02	8.6857E+00	5.71200E-04	3.24830E-05	5.41177E-01
1.9100E+02	8.5023E+00	5.17400E-04	3.12810E-05	5.42212E-01
1.9300E+02	8.3246E+00	5.92650E-04	3.29490E-05	5.43397E-01
1.9500E+02	8.1525E+00	6.82700E-04	3.48405E-05	5.44762E-01
1.9700E+02	7.9857E+00	7.40450E-04	3.60015E-05	5.46243E-01
1.9900E+02	7.8240E+00	6.54900E-04	3.42680E-05	5.47553E-01
2.0100E+02	7.6672E+00	5.77750E-04	3.26265E-05	5.48709E-01
2.0300E+02	7.5150E+00	6.52450E-04	3.42175E-05	5.50013E-01
2.0500E+02	7.3674E+00	6.11400E-04	3.33520E-05	5.51236E-01
2.0700E+02	7.2241E+00	5.71300E-04	3.24855E-05	5.52379E-01
2.0900E+02	7.0849E+00	6.65100E-04	3.44795E-05	5.53709E-01
2.1100E+02	6.9498E+00	7.29750E-04	3.57890E-05	5.55169E-01
2.1300E+02	6.8184E+00	6.21750E-04	3.35725E-05	5.56412E-01
2.1500E+02	6.6908E+00	7.23350E-04	3.56615E-05	5.57859E-01
2.1700E+02	6.5668E+00	7.32700E-04	3.58475E-05	5.59324E-01
2.1900E+02	6.4461E+00	7.21100E-04	3.56165E-05	5.60766E-01

2.2100E+02	6.3288E+00	6.79200E-04	3.47695E-05	5.62125E-01
2.2300E+02	6.2147E+00	8.11500E-04	3.73795E-05	5.63748E-01
2.2500E+02	6.1036E+00	7.20050E-04	3.55955E-05	5.65188E-01
2.2700E+02	5.9955E+00	7.57650E-04	3.63395E-05	5.66703E-01
2.2900E+02	5.8903E+00	7.65050E-04	3.64845E-05	5.68233E-01
2.3100E+02	5.7878E+00	7.62350E-04	3.64315E-05	5.69758E-01
2.3300E+02	5.6879E+00	7.73300E-04	3.66450E-05	5.71305E-01
2.3500E+02	5.5907E+00	8.45400E-04	3.80195E-05	5.72995E-01
2.3700E+02	5.4959E+00	8.00450E-04	3.71685E-05	5.74596E-01
2.3900E+02	5.4035E+00	8.29850E-04	3.77275E-05	5.76256E-01
2.4100E+02	5.3134E+00	8.01850E-04	3.71960E-05	5.77860E-01
2.4300E+02	5.2256E+00	7.73300E-04	3.66445E-05	5.79406E-01
2.4500E+02	5.1399E+00	8.29600E-04	3.77230E-05	5.81065E-01
2.4700E+02	5.0564E+00	7.79950E-04	3.67735E-05	5.82625E-01
2.4900E+02	4.9748E+00	9.39150E-04	3.97365E-05	5.84504E-01
2.5100E+02	4.8952E+00	9.40150E-04	3.97545E-05	5.86384E-01
2.5300E+02	4.8175E+00	8.41000E-04	3.79370E-05	5.88066E-01
2.5500E+02	4.7417E+00	9.80650E-04	4.04730E-05	5.90027E-01
2.5700E+02	4.6676E+00	8.14600E-04	3.74385E-05	5.91656E-01
2.5900E+02	4.5953E+00	8.48550E-04	3.80790E-05	5.93354E-01
2.6100E+02	4.5246E+00	1.07380E-03	4.20795E-05	5.95501E-01
2.6300E+02	4.4556E+00	8.62650E-04	3.83420E-05	5.97226E-01
2.6500E+02	4.3881E+00	9.01450E-04	3.90550E-05	5.99029E-01
2.6700E+02	4.3222E+00	8.89650E-04	3.88395E-05	6.00809E-01
2.6900E+02	4.2577E+00	9.56950E-04	4.00540E-05	6.02723E-01
2.7100E+02	4.1947E+00	9.29500E-04	3.95630E-05	6.04582E-01
2.7300E+02	4.1330E+00	1.04330E-03	4.15600E-05	6.06668E-01
2.7500E+02	4.0728E+00	1.01905E-03	4.11430E-05	6.08706E-01
2.7700E+02	4.0138E+00	1.02785E-03	4.12945E-05	6.10762E-01
2.7900E+02	3.9561E+00	9.96250E-04	4.07465E-05	6.12754E-01
2.8100E+02	3.8996E+00	9.01050E-04	3.90480E-05	6.14557E-01
2.8300E+02	3.8443E+00	9.31550E-04	3.96000E-05	6.16420E-01
2.8500E+02	3.7903E+00	9.90600E-04	4.06475E-05	6.18401E-01
2.8700E+02	3.7373E+00	1.04730E-03	4.16285E-05	6.20495E-01
2.8900E+02	3.6854E+00	1.15740E-03	4.34710E-05	6.22810E-01
2.9100E+02	3.6347E+00	9.50500E-04	3.99395E-05	6.24711E-01
2.9300E+02	3.5849E+00	9.82350E-04	4.05030E-05	6.26676E-01
2.9500E+02	3.5362E+00	9.89450E-04	4.06275E-05	6.28655E-01
2.9700E+02	3.4885E+00	9.11000E-04	3.92285E-05	6.30477E-01
2.9900E+02	3.4417E+00	1.09890E-03	4.25020E-05	6.32675E-01
3.0100E+02	3.3959E+00	9.76200E-04	4.03945E-05	6.34627E-01
3.0300E+02	3.3510E+00	1.08470E-03	4.22630E-05	6.36796E-01
3.0500E+02	3.3069E+00	1.09425E-03	4.24245E-05	6.38985E-01
3.0700E+02	3.2638E+00	1.05140E-03	4.16990E-05	6.41088E-01
3.0900E+02	3.2214E+00	9.43100E-04	3.98070E-05	6.42974E-01
3.1100E+02	3.1799E+00	1.07775E-03	4.21465E-05	6.45129E-01
3.1300E+02	3.1392E+00	1.10445E-03	4.25950E-05	6.47338E-01
3.1500E+02	3.0993E+00	1.25200E-03	4.49930E-05	6.49842E-01

3.1700E+02	3.0601E+00	1.26095E-03	4.51345E-05	6.52364E-01
3.1900E+02	3.0217E+00	1.11950E-03	4.28460E-05	6.54603E-01
3.2100E+02	2.9840E+00	1.10600E-03	4.26205E-05	6.56815E-01
3.2300E+02	2.9469E+00	8.91500E-04	3.88735E-05	6.58598E-01
3.2500E+02	2.9106E+00	1.05175E-03	4.17045E-05	6.60702E-01
3.2700E+02	2.8750E+00	1.18195E-03	4.38710E-05	6.63066E-01
3.2900E+02	2.8399E+00	9.71450E-04	4.03105E-05	6.65009E-01
3.3100E+02	2.8056E+00	1.08845E-03	4.23265E-05	6.67185E-01
3.3300E+02	2.7718E+00	1.05530E-03	4.17650E-05	6.69296E-01
3.3500E+02	2.7387E+00	9.40000E-04	3.97515E-05	6.71176E-01
3.3700E+02	2.7061E+00	9.84000E-04	4.05320E-05	6.73144E-01
3.3900E+02	2.6742E+00	9.62550E-04	4.01530E-05	6.75069E-01
3.4100E+02	2.6428E+00	9.55000E-04	4.00190E-05	6.76979E-01
3.4300E+02	2.6119E+00	1.07020E-03	4.20190E-05	6.79120E-01
3.4500E+02	2.5816E+00	1.10140E-03	4.25440E-05	6.81322E-01
3.4700E+02	2.5518E+00	1.00230E-03	4.08520E-05	6.83327E-01
3.4900E+02	2.5225E+00	1.02745E-03	4.12885E-05	6.85382E-01
3.5100E+02	2.4937E+00	1.02385E-03	4.12260E-05	6.87430E-01
3.5300E+02	2.4654E+00	9.41950E-04	3.97870E-05	6.89313E-01
3.5500E+02	2.4376E+00	1.01370E-03	4.10500E-05	6.91341E-01
3.5700E+02	2.4103E+00	1.05300E-03	4.17260E-05	6.93447E-01
3.5900E+02	2.3834E+00	1.02260E-03	4.12045E-05	6.95492E-01
3.6100E+02	2.3570E+00	9.52150E-04	3.99685E-05	6.97396E-01
3.6300E+02	2.3310E+00	9.50200E-04	3.99340E-05	6.99297E-01
3.6500E+02	2.3054E+00	9.17200E-04	3.93410E-05	7.01131E-01
3.6700E+02	2.2803E+00	8.38200E-04	3.78850E-05	7.02808E-01
3.6900E+02	2.2555E+00	8.62350E-04	3.83355E-05	7.04532E-01
3.7100E+02	2.2312E+00	8.68500E-04	3.84500E-05	7.06269E-01
3.7300E+02	2.2072E+00	9.07550E-04	3.91665E-05	7.08084E-01
3.7500E+02	2.1837E+00	8.91800E-04	3.88785E-05	7.09868E-01
3.7700E+02	2.1605E+00	9.38850E-04	3.97310E-05	7.11746E-01
3.7900E+02	2.1377E+00	8.66550E-04	3.84140E-05	7.13479E-01
3.8100E+02	2.1152E+00	7.14050E-04	3.54750E-05	7.14907E-01
3.8300E+02	2.0931E+00	6.67050E-04	3.45200E-05	7.16241E-01
3.8500E+02	2.0713E+00	6.65250E-04	3.44825E-05	7.17571E-01
3.8700E+02	2.0499E+00	7.09400E-04	3.53815E-05	7.18990E-01
3.8900E+02	2.0288E+00	6.80100E-04	3.47875E-05	7.20350E-01
3.9100E+02	2.0080E+00	6.28050E-04	3.37050E-05	7.21607E-01
3.9300E+02	1.9876E+00	6.50550E-04	3.41775E-05	7.22908E-01
3.9500E+02	1.9675E+00	5.90650E-04	3.29060E-05	7.24089E-01
3.9700E+02	1.9476E+00	5.99350E-04	3.30940E-05	7.25288E-01
3.9900E+02	1.9281E+00	5.54400E-04	3.21125E-05	7.26396E-01
4.0100E+02	1.9088E+00	6.21450E-04	3.35655E-05	7.27639E-01
4.0300E+02	1.8899E+00	5.54350E-04	3.21115E-05	7.28748E-01
4.0500E+02	1.8712E+00	5.16950E-04	3.12715E-05	7.29782E-01
4.0700E+02	1.8528E+00	5.58450E-04	3.22015E-05	7.30899E-01
4.0900E+02	1.8347E+00	5.95700E-04	3.30150E-05	7.32090E-01

Titanium 2.2 m.f.p.

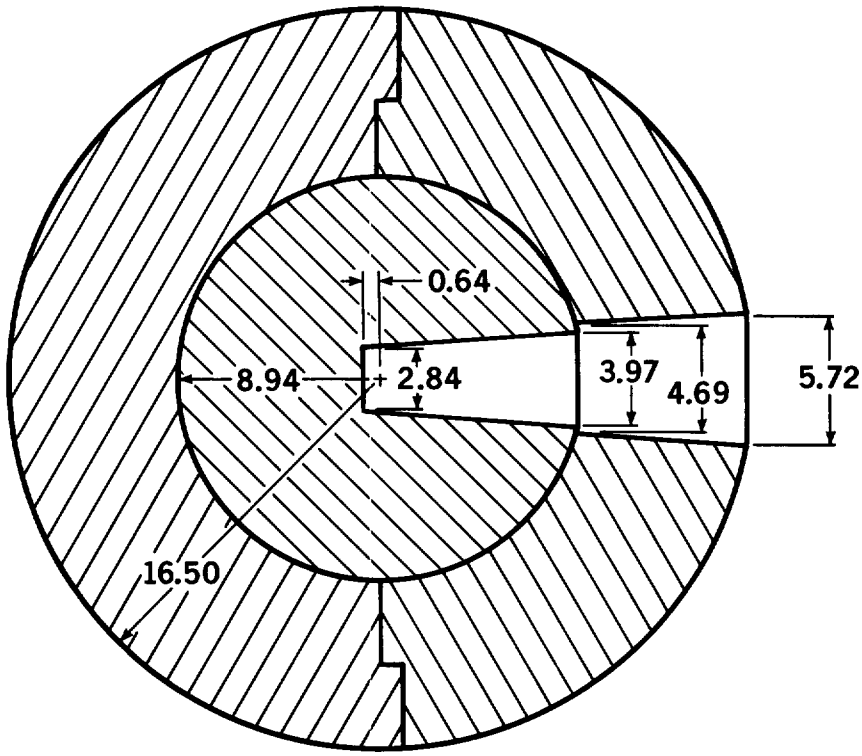

All Dimensions in Centimeters

$\rho = 4.54\ g/cm^3$

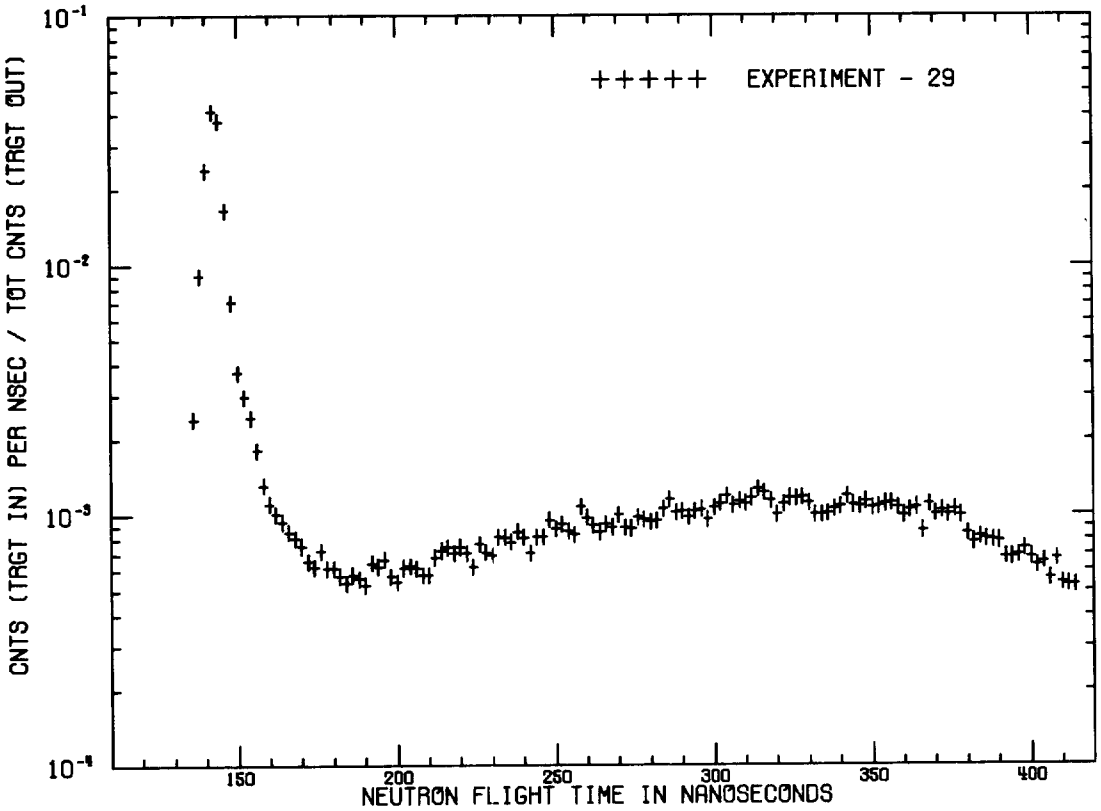

TITANIUM - 2.2 M.F.P. - 30 DEG.

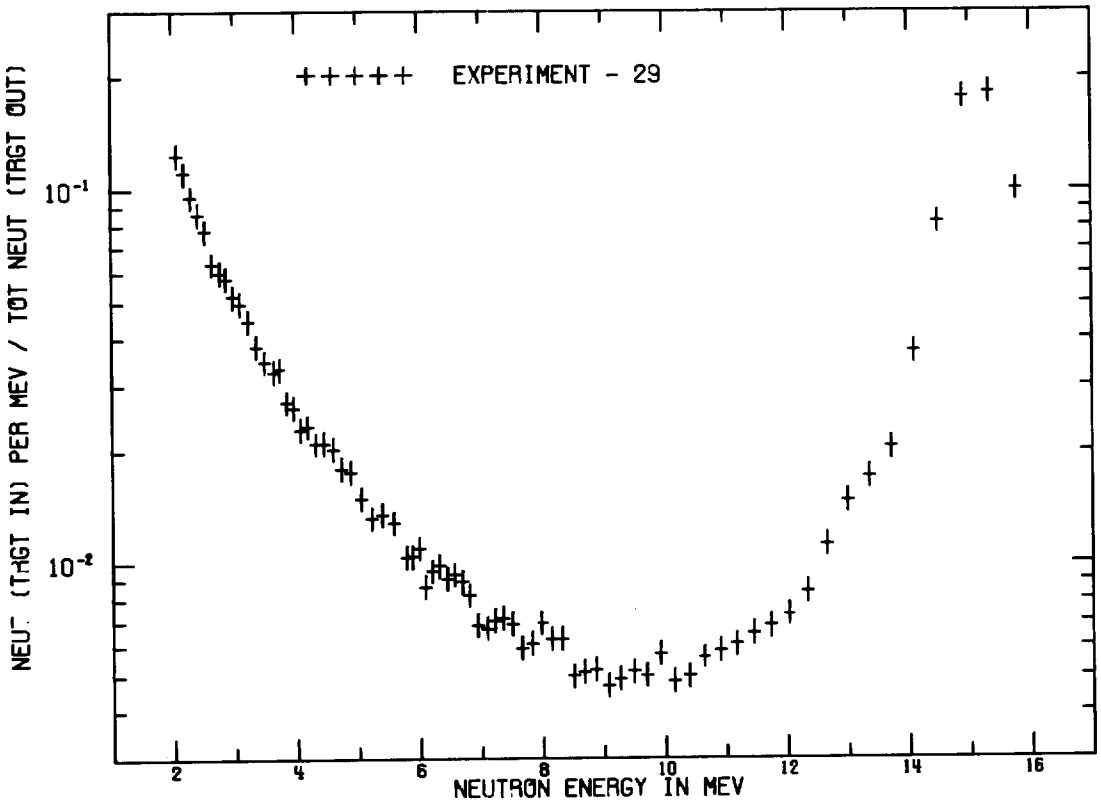

TITANIUM - 2.2 M.F.P. - 30 DEG.

TITANIUM - 2.2 M.F.P. - 30 DEG.
FLIGHTPATH = 765.20 CM DETECTOR = PILOT B FWHM = 4 NS

TIME(NS)	CALCULATED ENERGY(MEV)	CNT/NS/SOURCE	ERROR	INTEGRAL
1.3500E+02	1.7255E+01	4.54590E-04	2.97910E-05	9.09180E-04
1.3700E+02	1.6741E+01	2.40915E-03	6.06100E-05	5.72748E-03
1.3900E+02	1.6250E+01	9.04250E-03	1.14585E-04	2.38125E-02
1.4100E+02	1.5781E+01	2.40225E-02	1.85700E-04	7.18575E-02
1.4300E+02	1.5332E+01	4.13315E-02	2.43225E-04	1.54520E-01
1.4500E+02	1.4902E+01	3.78095E-02	2.32675E-04	2.30139E-01
1.4700E+02	1.4490E+01	1.65740E-02	1.54485E-04	2.63287E-01
1.4900E+02	1.4095E+01	7.06200E-03	1.01520E-04	2.77411E-01
1.5100E+02	1.3716E+01	3.70875E-03	7.43400E-05	2.84829E-01
1.5300E+02	1.3352E+01	2.95905E-03	6.67650E-05	2.90747E-01
1.5500E+02	1.3002E+01	2.45360E-03	6.11300E-05	2.95654E-01
1.5700E+02	1.2666E+01	1.81350E-03	5.31450E-05	2.99281E-01
1.5900E+02	1.2343E+01	1.31385E-03	4.59605E-05	3.01909E-01
1.6100E+02	1.2033E+01	1.10975E-03	4.26790E-05	3.04128E-01
1.6300E+02	1.1734E+01	1.01120E-03	4.10000E-05	3.06151E-01
1.6500E+02	1.1446E+01	9.43700E-04	3.98085E-05	3.08038E-01
1.6700E+02	1.1169E+01	8.59150E-04	3.82655E-05	3.09757E-01
1.6900E+02	1.0901E+01	8.07250E-04	3.72860E-05	3.11371E-01
1.7100E+02	1.0643E+01	7.54950E-04	3.62720E-05	3.12881E-01
1.7300E+02	1.0395E+01	6.56800E-04	3.42890E-05	3.14195E-01
1.7500E+02	1.0154E+01	6.22150E-04	3.35615E-05	3.15439E-01
1.7700E+02	9.9227E+00	7.20400E-04	3.55870E-05	3.16880E-01
1.7900E+02	9.6987E+00	6.16050E-04	3.34310E-05	3.18112E-01
1.8100E+02	9.4824E+00	6.14250E-04	3.33930E-05	3.19340E-01
1.8300E+02	9.2732E+00	5.72550E-04	3.24910E-05	3.20485E-01
1.8500E+02	9.0708E+00	5.36450E-04	3.16895E-05	3.21558E-01
1.8700E+02	8.8751E+00	5.79250E-04	3.26380E-05	3.22717E-01
1.8900E+02	8.6857E+00	5.56650E-04	3.21405E-05	3.23830E-01
1.9100E+02	8.5023E+00	5.25900E-04	3.14505E-05	3.24882E-01
1.9300E+02	8.3246E+00	6.44750E-04	3.40375E-05	3.26171E-01
1.9500E+02	8.1525E+00	6.24050E-04	3.36015E-05	3.27419E-01
1.9700E+02	7.9857E+00	6.66050E-04	3.44815E-05	3.28752E-01
1.9900E+02	7.8240E+00	5.71800E-04	3.24750E-05	3.29895E-01
2.0100E+02	7.6672E+00	5.41750E-04	3.18085E-05	3.30979E-01
2.0300E+02	7.5150E+00	6.17300E-04	3.34585E-05	3.32213E-01
2.0500E+02	7.3674E+00	6.27000E-04	3.36640E-05	3.33467E-01
2.0700E+02	7.2241E+00	6.12850E-04	3.33630E-05	3.34693E-01
2.0900E+02	7.0849E+00	5.76550E-04	3.25790E-05	3.35846E-01
2.1100E+02	6.9498E+00	5.77100E-04	3.25905E-05	3.37000E-01
2.1300E+02	6.8184E+00	6.79550E-04	3.47590E-05	3.38359E-01
2.1500E+02	6.6908E+00	7.22900E-04	3.56375E-05	3.39805E-01
2.1700E+02	6.5668E+00	7.41900E-04	3.60145E-05	3.41289E-01
2.1900E+02	6.4461E+00	7.06400E-04	3.53055E-05	3.42702E-01
2.2100E+02	6.3288E+00	7.46600E-04	3.61080E-05	3.44195E-01
2.2300E+02	6.2147E+00	7.04150E-04	3.52595E-05	3.45603E-01

2.2500E+02	6.1036E+00	6.21300E-04	3.35440E-05	3.46846E-01
2.2700E+02	5.9955E+00	7.68900E-04	3.65450E-05	3.48384E-01
2.2900E+02	5.8903E+00	7.10150E-04	3.53810E-05	3.49804E-01
2.3100E+02	5.7878E+00	6.88550E-04	3.49430E-05	3.51181E-01
2.3300E+02	5.6879E+00	8.20350E-04	3.75350E-05	3.52822E-01
2.3500E+02	5.5907E+00	8.14550E-04	3.74250E-05	3.54451E-01
2.3700E+02	5.4959E+00	7.81750E-04	3.67950E-05	3.56014E-01
2.3900E+02	5.4035E+00	8.59100E-04	3.82640E-05	3.57733E-01
2.4100E+02	5.3134E+00	8.14650E-04	3.74265E-05	3.59362E-01
2.4300E+02	5.2256E+00	7.06700E-04	3.53110E-05	3.60775E-01
2.4500E+02	5.1399E+00	8.19550E-04	3.75200E-05	3.62414E-01
2.4700E+02	5.0564E+00	8.16200E-04	3.74565E-05	3.64047E-01
2.4900E+02	4.9748E+00	9.55400E-04	4.00180E-05	3.65958E-01
2.5100E+02	4.8952E+00	8.79600E-04	3.86435E-05	3.67717E-01
2.5300E+02	4.8175E+00	9.22200E-04	3.94215E-05	3.69561E-01
2.5500E+02	4.7417E+00	8.63600E-04	3.83475E-05	3.71288E-01
2.5700E+02	4.6676E+00	8.34300E-04	3.77995E-05	3.72957E-01
2.5900E+02	4.5953E+00	1.07945E-03	4.21690E-05	3.75116E-01
2.6100E+02	4.5246E+00	9.76050E-04	4.03835E-05	3.77068E-01
2.6300E+02	4.4556E+00	9.09750E-04	3.91965E-05	3.78887E-01
2.6500E+02	4.3881E+00	8.58300E-04	3.82495E-05	3.80604E-01
2.6700E+02	4.3222E+00	9.22250E-04	3.94225E-05	3.82449E-01
2.6900E+02	4.2577E+00	8.94950E-04	3.89265E-05	3.84238E-01
2.7100E+02	4.1947E+00	9.99600E-04	4.07975E-05	3.86238E-01
2.7300E+02	4.1330E+00	8.93650E-04	3.89025E-05	3.88025E-01
2.7500E+02	4.0728E+00	8.85700E-04	3.87565E-05	3.89796E-01
2.7700E+02	4.0138E+00	9.78850E-04	4.04330E-05	3.91754E-01
2.7900E+02	3.9561E+00	9.60500E-04	4.01085E-05	3.93675E-01
2.8100E+02	3.8996E+00	9.42600E-04	3.97890E-05	3.95560E-01
2.8300E+02	3.8443E+00	9.50150E-04	3.99235E-05	3.97461E-01
2.8500E+02	3.7903E+00	1.05350E-03	4.17280E-05	3.99568E-01
2.8700E+02	3.7373E+00	1.14635E-03	4.32850E-05	4.01860E-01
2.8900E+02	3.6854E+00	1.02020E-03	4.11560E-05	4.03901E-01
2.9100E+02	3.6347E+00	1.03390E-03	4.13925E-05	4.05968E-01
2.9300E+02	3.5849E+00	9.79400E-04	4.04430E-05	4.07927E-01
2.9500E+02	3.5362E+00	1.03190E-03	4.13580E-05	4.09991E-01
2.9700E+02	3.4885E+00	1.05080E-03	4.16825E-05	4.12093E-01
2.9900E+02	3.4417E+00	9.59650E-04	4.00935E-05	4.14012E-01
3.0100E+02	3.3959E+00	1.06465E-03	4.19190E-05	4.16141E-01
3.0300E+02	3.3510E+00	1.11005E-03	4.26835E-05	4.18361E-01
3.0500E+02	3.3069E+00	1.18835E-03	4.39710E-05	4.20738E-01
3.0700E+02	3.2638E+00	1.09160E-03	4.23745E-05	4.22921E-01
3.0900E+02	3.2214E+00	1.13365E-03	4.30760E-05	4.25189E-01
3.1100E+02	3.1799E+00	1.10885E-03	4.26635E-05	4.27406E-01
3.1300E+02	3.1392E+00	1.16760E-03	4.36335E-05	4.29741E-01
3.1500E+02	3.0993E+00	1.26175E-03	4.51455E-05	4.32265E-01
3.1700E+02	3.0601E+00	1.22560E-03	4.45710E-05	4.34716E-01
3.1900E+02	3.0217E+00	1.14070E-03	4.31925E-05	4.36998E-01

3.2100E+02	2.9840E+00	1.00455E-03	4.08835E-05	4.39007E-01
3.2300E+02	2.9469E+00	1.10435E-03	4.25885E-05	4.41215E-01
3.2500E+02	2.9106E+00	1.16635E-03	4.36135E-05	4.43548E-01
3.2700E+02	2.8750E+00	1.16185E-03	4.35400E-05	4.45872E-01
3.2900E+02	2.8399E+00	1.17165E-03	4.36995E-05	4.48215E-01
3.3100E+02	2.8056E+00	1.11260E-03	4.27255E-05	4.50440E-01
3.3300E+02	2.7718E+00	1.00200E-03	4.08390E-05	4.52444E-01
3.3500E+02	2.7387E+00	1.00035E-03	4.08100E-05	4.54445E-01
3.3700E+02	2.7061E+00	1.01300E-03	4.10305E-05	4.56471E-01
3.3900E+02	2.6742E+00	1.05765E-03	4.17995E-05	4.58586E-01
3.4100E+02	2.6428E+00	1.07795E-03	4.21445E-05	4.60742E-01
3.4300E+02	2.6119E+00	1.18870E-03	4.39775E-05	4.63120E-01
3.4500E+02	2.5816E+00	1.09510E-03	4.24330E-05	4.65310E-01
3.4700E+02	2.5518E+00	1.08045E-03	4.21860E-05	4.67471E-01
3.4900E+02	2.5225E+00	1.13030E-03	4.30200E-05	4.69731E-01
3.5100E+02	2.4937E+00	1.06535E-03	4.19300E-05	4.71862E-01
3.5300E+02	2.4654E+00	1.08125E-03	4.22000E-05	4.74024E-01
3.5500E+02	2.4376E+00	1.10600E-03	4.26160E-05	4.76236E-01
3.5700E+02	2.4103E+00	1.11145E-03	4.27070E-05	4.78459E-01
3.5900E+02	2.3834E+00	1.07090E-03	4.20250E-05	4.80601E-01
3.6100E+02	2.3570E+00	9.96100E-04	4.07360E-05	4.82593E-01
3.6300E+02	2.3310E+00	1.04535E-03	4.15885E-05	4.84684E-01
3.6500E+02	2.3054E+00	1.07235E-03	4.20495E-05	4.86829E-01
3.6700E+02	2.2803E+00	8.66850E-04	3.84085E-05	4.88562E-01
3.6900E+02	2.2555E+00	1.09860E-03	4.24920E-05	4.90760E-01
3.7100E+02	2.2312E+00	1.00855E-03	4.09540E-05	4.92777E-01
3.7300E+02	2.2072E+00	1.04090E-03	4.15130E-05	4.94859E-01
3.7500E+02	2.1837E+00	1.00185E-03	4.08370E-05	4.96862E-01
3.7700E+02	2.1605E+00	1.05175E-03	4.16980E-05	4.98966E-01
3.7900E+02	2.1377E+00	9.94500E-04	4.07085E-05	5.00955E-01
3.8100E+02	2.1152E+00	8.45950E-04	3.80190E-05	5.02647E-01
3.8300E+02	2.0931E+00	7.80250E-04	3.67660E-05	5.04207E-01
3.8500E+02	2.0713E+00	8.16500E-04	3.74620E-05	5.05840E-01
3.8700E+02	2.0499E+00	8.02800E-04	3.72005E-05	5.07446E-01
3.8900E+02	2.0288E+00	7.90650E-04	3.69670E-05	5.09027E-01
3.9100E+02	2.0080E+00	7.87700E-04	3.69100E-05	5.10602E-01
3.9300E+02	1.9876E+00	6.80550E-04	3.47795E-05	5.11964E-01
3.9500E+02	1.9675E+00	6.79250E-04	3.47530E-05	5.13322E-01
3.9700E+02	1.9476E+00	6.89350E-04	3.49590E-05	5.14701E-01
3.9900E+02	1.9281E+00	7.37200E-04	3.59220E-05	5.16175E-01
4.0100E+02	1.9088E+00	6.79400E-04	3.47565E-05	5.17534E-01
4.0300E+02	1.8899E+00	6.27950E-04	3.36850E-05	5.18790E-01
4.0500E+02	1.8712E+00	6.52300E-04	3.41955E-05	5.20094E-01
4.0700E+02	1.8528E+00	5.56650E-04	3.21405E-05	5.21208E-01
4.0900E+02	1.8347E+00	6.67300E-04	3.45070E-05	5.22542E-01
4.1100E+02	1.8168E+00	5.34350E-04	3.16425E-05	5.23611E-01
4.1300E+02	1.7992E+00	5.27100E-04	3.14780E-05	5.24665E-01
4.1500E+02	1.7819E+00	5.23600E-04	3.13985E-05	5.25712E-01

44

Titanium 3.5 m.f.p.

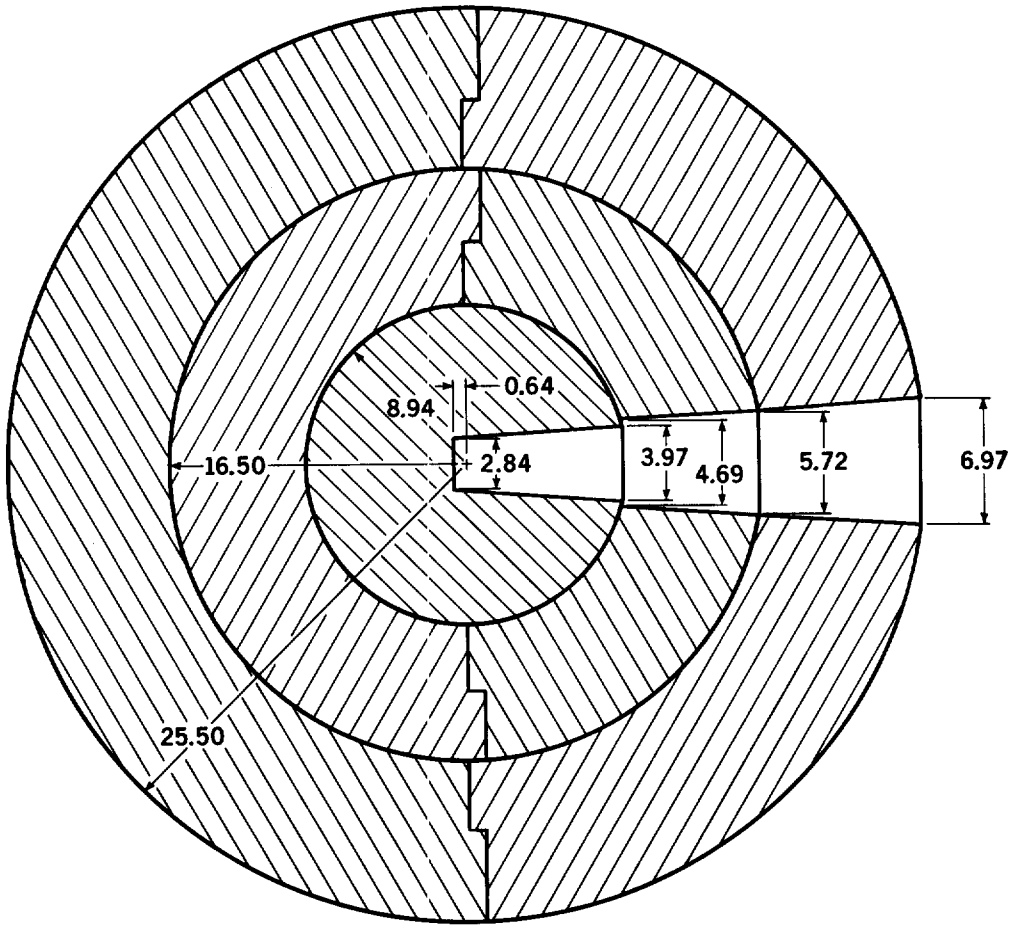

All Dimensions in Centimeters

$\rho = 4.54\ g/cm^3$

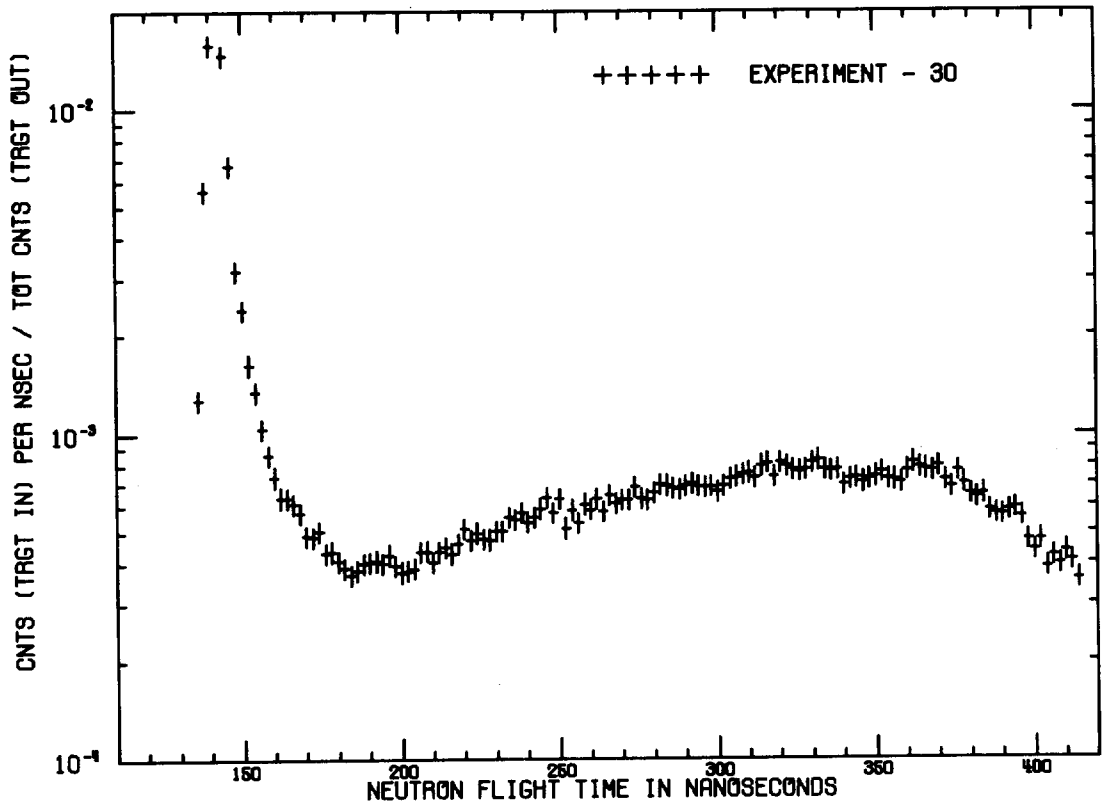

TITANIUM - 3.5 M.F.P. - 30 DEG.

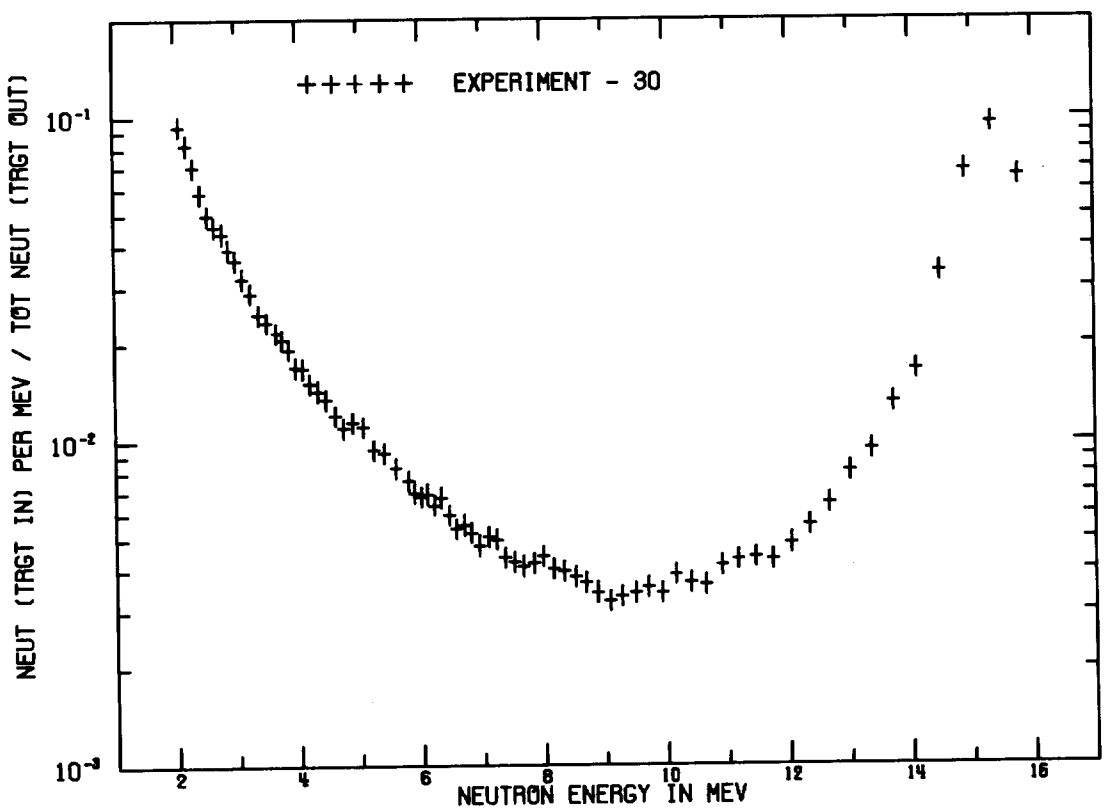

TITANIUM - 3.5 M.F.P. - 30 DEG.

TITANIUM - 3.5 M.F.P. - 30 DEG.
FLIGHTPATH = 765.20 CM DETECTOR = PILOT B FWHM = 4 NS

TIME(NS)	CALCULATED ENERGY(MEV)	CNT/NS/SOURCE	ERROR	INTEGRAL
1.3500E+02	1.7255E+01	1.78415E-04	1.77360E-05	3.56830E-04
1.3700E+02	1.6741E+01	1.27030E-03	3.34590E-05	2.89743E-03
1.3900E+02	1.6250E+01	5.60050E-03	6.56650E-05	1.40984E-02
1.4100E+02	1.5781E+01	1.57535E-02	1.08610E-04	4.56054E-02
1.4300E+02	1.5332E+01	2.15975E-02	1.26905E-04	8.88004E-02
1.4500E+02	1.4902E+01	1.46135E-02	1.04670E-04	1.18027E-01
1.4700E+02	1.4490E+01	6.71350E-03	7.16400E-05	1.31454E-01
1.4900E+02	1.4095E+01	3.17440E-03	5.02300E-05	1.37803E-01
1.5100E+02	1.3716E+01	2.39555E-03	4.41480E-05	1.42594E-01
1.5300E+02	1.3352E+01	1.62945E-03	3.72060E-05	1.45853E-01
1.5500E+02	1.3002E+01	1.34635E-03	3.42865E-05	1.48546E-01
1.5700E+02	1.2666E+01	1.03915E-03	3.08075E-05	1.50624E-01
1.5900E+02	1.2343E+01	8.60550E-04	2.85910E-05	1.52345E-01
1.6100E+02	1.2033E+01	7.38850E-04	2.69765E-05	1.53823E-01
1.6300E+02	1.1734E+01	6.38050E-04	2.55620E-05	1.55099E-01
1.6500E+02	1.1446E+01	6.34450E-04	2.55100E-05	1.56368E-01
1.6700E+02	1.1169E+01	6.09600E-04	2.51485E-05	1.57587E-01
1.6900E+02	1.0901E+01	5.70950E-04	2.45750E-05	1.58729E-01
1.7100E+02	1.0643E+01	4.86830E-04	2.32795E-05	1.59703E-01
1.7300E+02	1.0395E+01	4.81815E-04	2.32000E-05	1.60666E-01
1.7500E+02	1.0154E+01	5.00300E-04	2.34915E-05	1.61667E-01
1.7700E+02	9.9227E+00	4.28815E-04	2.23420E-05	1.62525E-01
1.7900E+02	9.6987E+00	4.35080E-04	2.24450E-05	1.63395E-01
1.8100E+02	9.4824E+00	4.06290E-04	2.19670E-05	1.64207E-01
1.8300E+02	9.2732E+00	3.86805E-04	2.16380E-05	1.64981E-01
1.8500E+02	9.0708E+00	3.68065E-04	2.13160E-05	1.65717E-01
1.8700E+02	8.8751E+00	3.80915E-04	2.15370E-05	1.66479E-01
1.8900E+02	8.6857E+00	3.98295E-04	2.18325E-05	1.67276E-01
1.9100E+02	8.5023E+00	4.03070E-04	2.19130E-05	1.68082E-01
1.9300E+02	8.3246E+00	4.07035E-04	2.19795E-05	1.68896E-01
1.9500E+02	8.1525E+00	3.99810E-04	2.18580E-05	1.69695E-01
1.9700E+02	7.9857E+00	4.24515E-04	2.22710E-05	1.70544E-01
1.9900E+02	7.8240E+00	3.93310E-04	2.17485E-05	1.71331E-01
2.0100E+02	7.6672E+00	3.75265E-04	2.14405E-05	1.72082E-01
2.0300E+02	7.5150E+00	3.79135E-04	2.15065E-05	1.72840E-01
2.0500E+02	7.3674E+00	3.85075E-04	2.16085E-05	1.73610E-01
2.0700E+02	7.2241E+00	4.33430E-04	2.24180E-05	1.74477E-01
2.0900E+02	7.0849E+00	4.35440E-04	2.24510E-05	1.75348E-01
2.1100E+02	6.9498E+00	4.02065E-04	2.18960E-05	1.76152E-01
2.1300E+02	6.8184E+00	4.32450E-04	2.24020E-05	1.77017E-01
2.1500E+02	6.6908E+00	4.48050E-04	2.26570E-05	1.77913E-01
2.1700E+02	6.5668E+00	4.27675E-04	2.23230E-05	1.78768E-01
2.1900E+02	6.4461E+00	4.59210E-04	2.28380E-05	1.79687E-01
2.2100E+02	6.3288E+00	5.09100E-04	2.36295E-05	1.80705E-01
2.2300E+02	6.2147E+00	4.69660E-04	2.30060E-05	1.81644E-01

2.2500E+02	6.1036E+00	4.95725E-04	2.34200E-05	1.82636E-01
2.2700E+02	5.9955E+00	4.74010E-04	2.30755E-05	1.83584E-01
2.2900E+02	5.8903E+00	4.71515E-04	2.30355E-05	1.84527E-01
2.3100E+02	5.7878E+00	5.01400E-04	2.35090E-05	1.85529E-01
2.3300E+02	5.6879E+00	5.02550E-04	2.35270E-05	1.86535E-01
2.3500E+02	5.5907E+00	5.54650E-04	2.43295E-05	1.87644E-01
2.3700E+02	5.4959E+00	5.44200E-04	2.41705E-05	1.88732E-01
2.3900E+02	5.4035E+00	5.71200E-04	2.45790E-05	1.89875E-01
2.4100E+02	5.3134E+00	5.33600E-04	2.40090E-05	1.90942E-01
2.4300E+02	5.2256E+00	5.54200E-04	2.43230E-05	1.92050E-01
2.4500E+02	5.1399E+00	5.87450E-04	2.48215E-05	1.93225E-01
2.4700E+02	5.0564E+00	6.33900E-04	2.55015E-05	1.94493E-01
2.4900E+02	4.9748E+00	5.70900E-04	2.45745E-05	1.95635E-01
2.5100E+02	4.8952E+00	6.28550E-04	2.54245E-05	1.96892E-01
2.5300E+02	4.8175E+00	5.12100E-04	2.36765E-05	1.97916E-01
2.5500E+02	4.7417E+00	5.83200E-04	2.47585E-05	1.99082E-01
2.5700E+02	4.6676E+00	5.29800E-04	2.39505E-05	2.00142E-01
2.5900E+02	4.5953E+00	6.07500E-04	2.51175E-05	2.01357E-01
2.6100E+02	4.5246E+00	5.83900E-04	2.47690E-05	2.02525E-01
2.6300E+02	4.4556E+00	6.29600E-04	2.54400E-05	2.03784E-01
2.6500E+02	4.3881E+00	5.75250E-04	2.46400E-05	2.04935E-01
2.6700E+02	4.3222E+00	6.46100E-04	2.56775E-05	2.06227E-01
2.6900E+02	4.2577E+00	6.10650E-04	2.51635E-05	2.07448E-01
2.7100E+02	4.1947E+00	6.23700E-04	2.53540E-05	2.08695E-01
2.7300E+02	4.1330E+00	6.23600E-04	2.53525E-05	2.09943E-01
2.7500E+02	4.0728E+00	6.84300E-04	2.62200E-05	2.11311E-01
2.7700E+02	4.0138E+00	6.30750E-04	2.54560E-05	2.12573E-01
2.7900E+02	3.9561E+00	6.24450E-04	2.53655E-05	2.13822E-01
2.8100E+02	3.8996E+00	6.56150E-04	2.58220E-05	2.15134E-01
2.8300E+02	3.8443E+00	6.94650E-04	2.63655E-05	2.16523E-01
2.8500E+02	3.7903E+00	6.91500E-04	2.63215E-05	2.17906E-01
2.8700E+02	3.7373E+00	6.78800E-04	2.61430E-05	2.19264E-01
2.8900E+02	3.6854E+00	6.74600E-04	2.60840E-05	2.20613E-01
2.9100E+02	3.6347E+00	6.89600E-04	2.62950E-05	2.21992E-01
2.9300E+02	3.5849E+00	7.01850E-04	2.64660E-05	2.23396E-01
2.9500E+02	3.5362E+00	6.87250E-04	2.62615E-05	2.24770E-01
2.9700E+02	3.4885E+00	6.82200E-04	2.61910E-05	2.26135E-01
2.9900E+02	3.4417E+00	6.86900E-04	2.62570E-05	2.27509E-01
3.0100E+02	3.3959E+00	6.61000E-04	2.58910E-05	2.28831E-01
3.0300E+02	3.3510E+00	6.90200E-04	2.63035E-05	2.30211E-01
3.0500E+02	3.3069E+00	7.25350E-04	2.67910E-05	2.31662E-01
3.0700E+02	3.2638E+00	7.33350E-04	2.69010E-05	2.33128E-01
3.0900E+02	3.2214E+00	7.46300E-04	2.70775E-05	2.34621E-01
3.1100E+02	3.1799E+00	7.57350E-04	2.72280E-05	2.36136E-01
3.1300E+02	3.1392E+00	7.28650E-04	2.68365E-05	2.37593E-01
3.1500E+02	3.0993E+00	7.95150E-04	2.77350E-05	2.39183E-01
3.1700E+02	3.0601E+00	8.08750E-04	2.79150E-05	2.40801E-01
3.1900E+02	3.0217E+00	7.37500E-04	2.69580E-05	2.42276E-01

3.2100E+02	2.9840E+00	8.12400E-04	2.79630E-05	2.43901E-01
3.2300E+02	2.9469E+00	7.89600E-04	2.76610E-05	2.45480E-01
3.2500E+02	2.9106E+00	7.74900E-04	2.74645E-05	2.47030E-01
3.2700E+02	2.8750E+00	7.63850E-04	2.73155E-05	2.48557E-01
3.2900E+02	2.8399E+00	7.73400E-04	2.74445E-05	2.50104E-01
3.3100E+02	2.8056E+00	8.13400E-04	2.79760E-05	2.51731E-01
3.3300E+02	2.7718E+00	8.27200E-04	2.81580E-05	2.53385E-01
3.3500E+02	2.7387E+00	7.72050E-04	2.74260E-05	2.54929E-01
3.3700E+02	2.7061E+00	7.67750E-04	2.73685E-05	2.56465E-01
3.3900E+02	2.6742E+00	7.71900E-04	2.74240E-05	2.58009E-01
3.4100E+02	2.6428E+00	6.96550E-04	2.63920E-05	2.59402E-01
3.4300E+02	2.6119E+00	7.23550E-04	2.67670E-05	2.60849E-01
3.4500E+02	2.5816E+00	7.28650E-04	2.68365E-05	2.62306E-01
3.4700E+02	2.5518E+00	7.08750E-04	2.65620E-05	2.63724E-01
3.4900E+02	2.5225E+00	7.22350E-04	2.67500E-05	2.65168E-01
3.5100E+02	2.4937E+00	7.38700E-04	2.69740E-05	2.66646E-01
3.5300E+02	2.4654E+00	7.61000E-04	2.72775E-05	2.68168E-01
3.5500E+02	2.4376E+00	7.23150E-04	2.67610E-05	2.69614E-01
3.5700E+02	2.4103E+00	7.20500E-04	2.67245E-05	2.71055E-01
3.5900E+02	2.3834E+00	7.08150E-04	2.65535E-05	2.72471E-01
3.6100E+02	2.3570E+00	7.70000E-04	2.73990E-05	2.74011E-01
3.6300E+02	2.3310E+00	8.14000E-04	2.79840E-05	2.75639E-01
3.6500E+02	2.3054E+00	7.84700E-04	2.75955E-05	2.77209E-01
3.6700E+02	2.2803E+00	7.75000E-04	2.74655E-05	2.78759E-01
3.6900E+02	2.2555E+00	7.68400E-04	2.73770E-05	2.80296E-01
3.7100E+02	2.2312E+00	7.93650E-04	2.77150E-05	2.81883E-01
3.7300E+02	2.2072E+00	7.16250E-04	2.66655E-05	2.83315E-01
3.7500E+02	2.1837E+00	6.85500E-04	2.62370E-05	2.84686E-01
3.7700E+02	2.1605E+00	7.66700E-04	2.73545E-05	2.86220E-01
3.7900E+02	2.1377E+00	7.04050E-04	2.64960E-05	2.87628E-01
3.8100E+02	2.1152E+00	6.50550E-04	2.57415E-05	2.88929E-01
3.8300E+02	2.0931E+00	6.35900E-04	2.55305E-05	2.90201E-01
3.8500E+02	2.0713E+00	6.53650E-04	2.57860E-05	2.91508E-01
3.8700E+02	2.0499E+00	5.80700E-04	2.47215E-05	2.92670E-01
3.8900E+02	2.0288E+00	5.65400E-04	2.44920E-05	2.93800E-01
3.9100E+02	2.0080E+00	5.62100E-04	2.44425E-05	2.94925E-01
3.9300E+02	1.9876E+00	5.80250E-04	2.47145E-05	2.96085E-01
3.9500E+02	1.9675E+00	5.89100E-04	2.48455E-05	2.97263E-01
3.9700E+02	1.9476E+00	5.56000E-04	2.43505E-05	2.98375E-01
3.9900E+02	1.9281E+00	4.69325E-04	2.30005E-05	2.99314E-01
4.0100E+02	1.9088E+00	4.37725E-04	2.24885E-05	3.00189E-01
4.0300E+02	1.8899E+00	4.71480E-04	2.30350E-05	3.01132E-01
4.0500E+02	1.8712E+00	3.88235E-04	2.16620E-05	3.01909E-01
4.0700E+02	1.8528E+00	4.20025E-04	2.21965E-05	3.02749E-01
4.0900E+02	1.8347E+00	3.96150E-04	2.17965E-05	3.03541E-01
4.1100E+02	1.8168E+00	4.34795E-04	2.24405E-05	3.04411E-01
4.1300E+02	1.7992E+00	4.05475E-04	2.19535E-05	3.05222E-01
4.1500E+02	1.7819E+00	3.57980E-04	2.11410E-05	3.05938E-01

Iron 0.9 m.f.p.

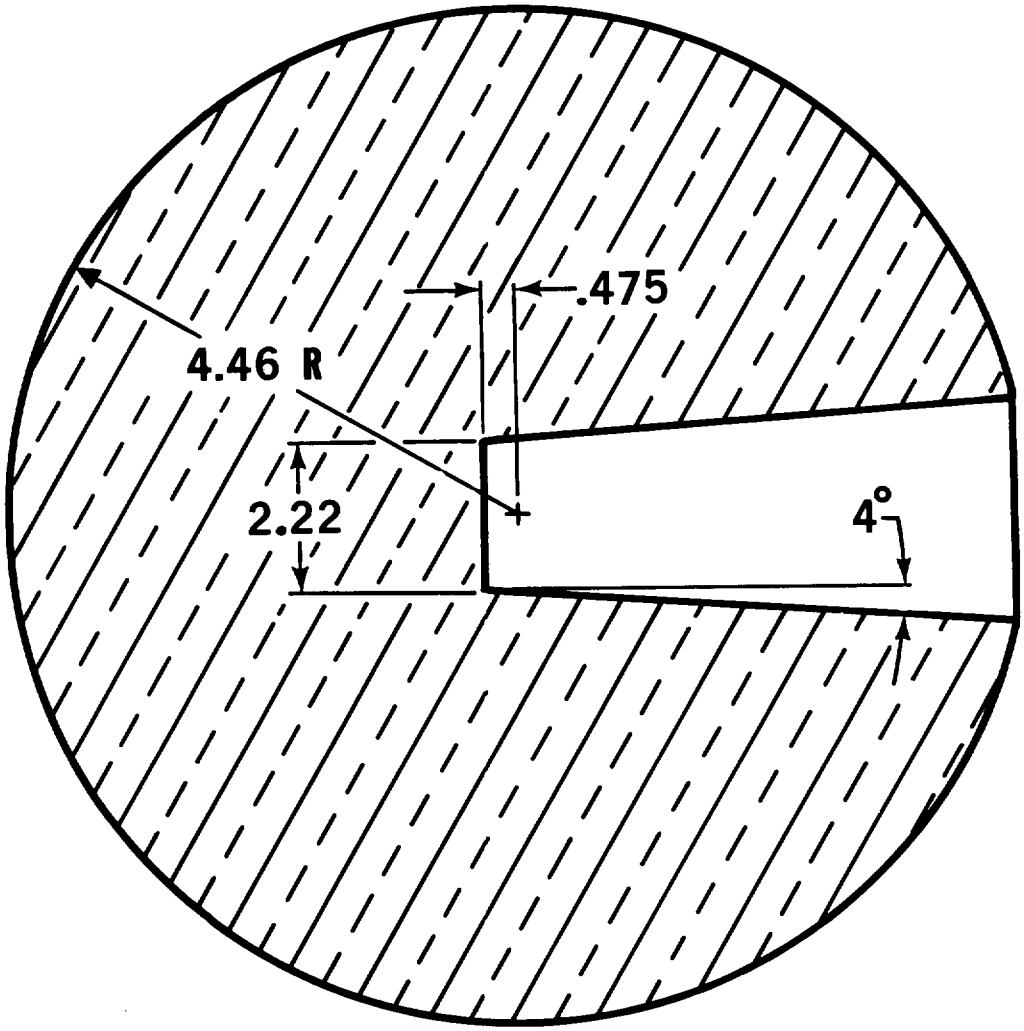

All Dimensions in Centimeters

Fe > 97.0%

C < 1.2%

Mn < 1.0%

P < 0.7%

S < 0.1%

$\rho = 7.85\ g/cm^3$

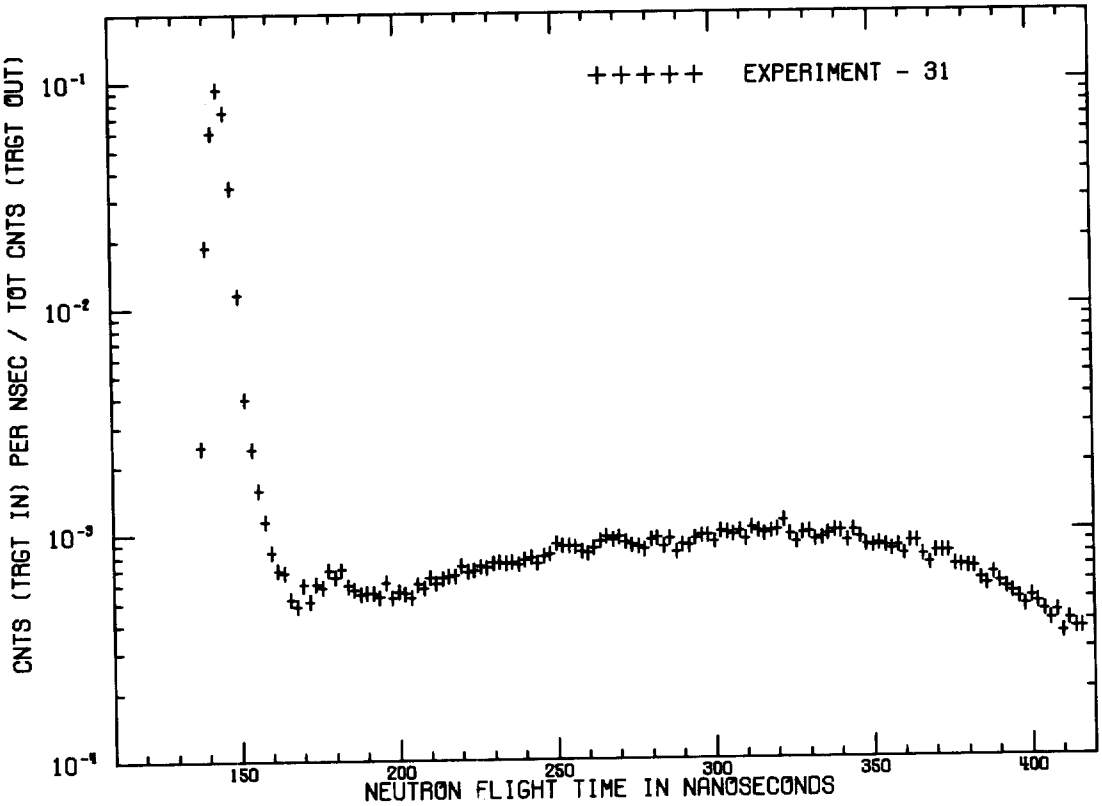

IRON - 0.9 M.F.P. - 30 DEG.

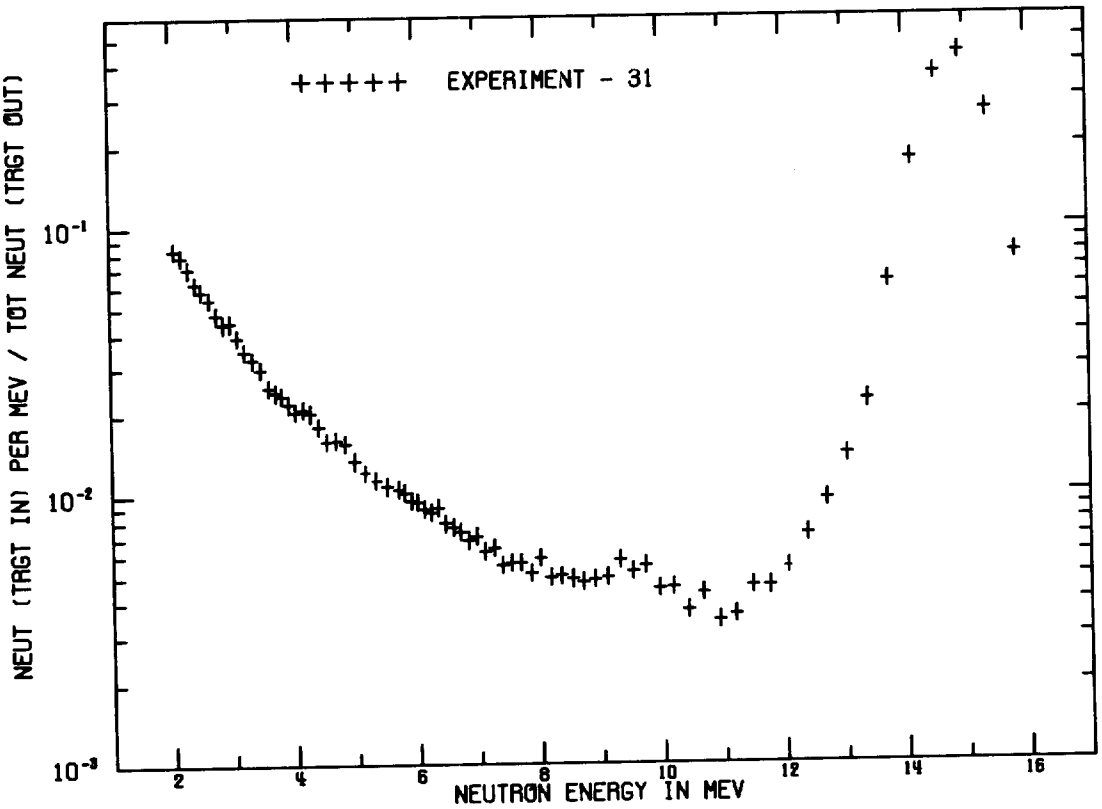

IRON - 0.9 M.F.P. - 30 DEG.

IRON - 0.9 M.F.P. - 30 DEG.
FLIGHTPATH = 766.00 CM DETECTOR = NE213 FWHM = 3 NS

TIME(NS)	CALCULATED ENERGY(MEV)	CNT/NS/SOURCE	ERROR	INTEGRAL
1.3700E+02	1.6777E+01	7.62150E-05	1.02225E-05	1.52430E-04
1.3900E+02	1.6285E+01	2.44030E-03	5.60300E-05	5.03303E-03
1.4100E+02	1.5815E+01	1.86320E-02	1.54680E-04	4.22970E-02
1.4300E+02	1.5365E+01	5.99200E-02	2.77370E-04	1.62137E-01
1.4500E+02	1.4934E+01	9.34450E-02	3.46360E-04	3.49027E-01
1.4700E+02	1.4521E+01	7.45400E-02	3.09355E-04	4.98107E-01
1.4900E+02	1.4125E+01	3.42380E-02	2.09670E-04	5.66583E-01
1.5100E+02	1.3745E+01	1.14410E-02	1.21220E-04	5.89465E-01
1.5300E+02	1.3380E+01	3.95720E-03	7.13200E-05	5.97379E-01
1.5500E+02	1.3030E+01	2.38960E-03	5.54450E-05	6.02159E-01
1.5700E+02	1.2693E+01	1.57790E-03	4.50815E-05	6.05314E-01
1.5900E+02	1.2370E+01	1.14325E-03	3.83970E-05	6.07601E-01
1.6100E+02	1.2058E+01	8.32550E-04	3.27945E-05	6.09266E-01
1.6300E+02	1.1759E+01	6.89950E-04	2.98725E-05	6.10646E-01
1.6500E+02	1.1470E+01	6.77850E-04	2.96115E-05	6.12002E-01
1.6700E+02	1.1192E+01	5.17400E-04	2.59010E-05	6.13036E-01
1.6900E+02	1.0924E+01	4.82365E-04	2.50180E-05	6.14001E-01
1.7100E+02	1.0666E+01	5.97900E-04	2.78255E-05	6.15197E-01
1.7300E+02	1.0417E+01	5.03000E-04	2.55415E-05	6.16203E-01
1.7500E+02	1.0176E+01	5.99850E-04	2.78695E-05	6.17403E-01
1.7700E+02	9.9438E+00	5.81150E-04	2.74360E-05	6.18565E-01
1.7900E+02	9.7194E+00	6.95050E-04	2.99825E-05	6.19955E-01
1.8100E+02	9.5025E+00	6.46550E-04	2.89260E-05	6.21248E-01
1.8300E+02	9.2929E+00	6.95300E-04	2.99880E-05	6.22639E-01
1.8500E+02	9.0901E+00	5.90400E-04	2.76515E-05	6.23820E-01
1.8700E+02	8.8939E+00	5.67100E-04	2.71055E-05	6.24954E-01
1.8900E+02	8.7041E+00	5.43000E-04	2.65285E-05	6.26040E-01
1.9100E+02	8.5203E+00	5.45850E-04	2.65975E-05	6.27131E-01
1.9300E+02	8.3423E+00	5.48150E-04	2.66520E-05	6.28228E-01
1.9500E+02	8.1698E+00	5.25250E-04	2.60955E-05	6.29278E-01
1.9700E+02	8.0026E+00	6.06400E-04	2.80200E-05	6.30491E-01
1.9900E+02	7.8406E+00	5.20550E-04	2.59790E-05	6.31532E-01
2.0100E+02	7.6834E+00	5.54900E-04	2.68140E-05	6.32642E-01
2.0300E+02	7.5310E+00	5.43900E-04	2.65500E-05	6.33730E-01
2.0500E+02	7.3830E+00	5.23500E-04	2.60515E-05	6.34777E-01
2.0700E+02	7.2394E+00	5.97800E-04	2.78225E-05	6.35972E-01
2.0900E+02	7.0999E+00	5.73950E-04	2.72650E-05	6.37120E-01
2.1100E+02	6.9645E+00	6.38050E-04	2.87350E-05	6.38396E-01
2.1300E+02	6.8329E+00	6.02350E-04	2.79250E-05	6.39601E-01
2.1500E+02	6.7050E+00	6.34400E-04	2.86550E-05	6.40870E-01
2.1700E+02	6.5807E+00	6.42850E-04	2.88450E-05	6.42156E-01
2.1900E+02	6.4598E+00	6.48800E-04	2.89750E-05	6.43453E-01
2.2100E+02	6.3422E+00	7.16550E-04	3.04390E-05	6.44886E-01
2.2300E+02	6.2278E+00	6.78700E-04	2.96305E-05	6.46244E-01
2.2500E+02	6.1165E+00	6.86500E-04	2.97985E-05	6.47617E-01

2.2700E+02	6.0082E+00	7.12700E-04	3.03585E-05	6.49042E-01
2.2900E+02	5.9027E+00	7.03850E-04	3.01705E-05	6.50450E-01
2.3100E+02	5.8000E+00	7.37600E-04	3.08800E-05	6.51925E-01
2.3300E+02	5.6999E+00	7.43250E-04	3.09965E-05	6.53411E-01
2.3500E+02	5.6025E+00	7.34700E-04	3.08190E-05	6.54881E-01
2.3700E+02	5.5075E+00	7.41950E-04	3.09700E-05	6.56365E-01
2.3900E+02	5.4149E+00	7.24450E-04	3.06060E-05	6.57814E-01
2.4100E+02	5.3246E+00	7.60450E-04	3.13515E-05	6.59335E-01
2.4300E+02	5.2366E+00	7.79650E-04	3.17425E-05	6.60894E-01
2.4500E+02	5.1508E+00	7.33800E-04	3.08010E-05	6.62361E-01
2.4700E+02	5.0670E+00	7.90250E-04	3.19560E-05	6.63942E-01
2.4900E+02	4.9853E+00	8.07700E-04	3.23040E-05	6.65557E-01
2.5100E+02	4.9056E+00	8.92000E-04	3.39380E-05	6.67341E-01
2.5300E+02	4.8277E+00	8.76650E-04	3.36465E-05	6.69095E-01
2.5500E+02	4.7517E+00	8.73000E-04	3.35765E-05	6.70841E-01
2.5700E+02	4.6775E+00	8.69750E-04	3.35145E-05	6.72580E-01
2.5900E+02	4.6050E+00	8.28300E-04	3.27105E-05	6.74237E-01
2.6100E+02	4.5342E+00	8.10350E-04	3.23570E-05	6.75857E-01
2.6300E+02	4.4650E+00	8.56300E-04	3.32555E-05	6.77570E-01
2.6500E+02	4.3974E+00	9.14250E-04	3.43560E-05	6.79399E-01
2.6700E+02	4.3313E+00	9.63250E-04	3.52600E-05	6.81325E-01
2.6900E+02	4.2667E+00	9.27100E-04	3.45960E-05	6.83179E-01
2.7100E+02	4.2035E+00	9.54050E-04	3.50915E-05	6.85087E-01
2.7300E+02	4.1417E+00	9.09700E-04	3.42705E-05	6.86907E-01
2.7500E+02	4.0813E+00	8.79400E-04	3.36990E-05	6.88666E-01
2.7700E+02	4.0222E+00	8.65900E-04	3.34410E-05	6.90397E-01
2.7900E+02	3.9644E+00	8.40350E-04	3.29465E-05	6.92078E-01
2.8100E+02	3.9078E+00	9.30700E-04	3.46620E-05	6.93939E-01
2.8300E+02	3.8524E+00	9.43900E-04	3.49055E-05	6.95827E-01
2.8500E+02	3.7982E+00	8.68500E-04	3.34905E-05	6.97564E-01
2.8700E+02	3.7452E+00	9.41650E-04	3.48645E-05	6.99448E-01
2.8900E+02	3.6932E+00	8.17500E-04	3.24985E-05	7.01083E-01
2.9100E+02	3.6423E+00	8.80050E-04	3.37115E-05	7.02843E-01
2.9300E+02	3.5925E+00	8.68650E-04	3.34930E-05	7.04580E-01
2.9500E+02	3.5437E+00	9.40050E-04	3.48350E-05	7.06460E-01
2.9700E+02	3.4958E+00	9.66750E-04	3.53235E-05	7.08394E-01
2.9900E+02	3.4490E+00	9.67050E-04	3.53290E-05	7.10328E-01
3.0100E+02	3.4030E+00	9.07800E-04	3.42355E-05	7.12143E-01
3.0300E+02	3.3580E+00	1.00415E-03	3.59965E-05	7.14152E-01
3.0500E+02	3.3139E+00	9.94250E-04	3.58195E-05	7.16140E-01
3.0700E+02	3.2706E+00	9.71100E-04	3.54025E-05	7.18082E-01
3.0900E+02	3.2282E+00	1.01150E-03	3.61275E-05	7.20105E-01
3.1100E+02	3.1866E+00	9.24550E-04	3.45480E-05	7.21954E-01
3.1300E+02	3.1458E+00	1.04360E-03	3.66930E-05	7.24042E-01
3.1500E+02	3.1058E+00	1.00900E-03	3.60830E-05	7.26060E-01
3.1700E+02	3.0665E+00	9.77600E-04	3.55195E-05	7.28015E-01
3.1900E+02	3.0280E+00	1.00235E-03	3.59645E-05	7.30019E-01
3.2100E+02	2.9902E+00	1.02000E-03	3.62780E-05	7.32059E-01

3.2300E+02	2.9531E+00	1.11790E-03	3.79710E-05	7.34295E-01
3.2500E+02	2.9167E+00	9.70950E-04	3.53995E-05	7.36237E-01
3.2700E+02	2.8810E+00	8.94300E-04	3.39815E-05	7.38026E-01
3.2900E+02	2.8459E+00	9.86250E-04	3.56760E-05	7.39998E-01
3.3100E+02	2.8115E+00	9.91900E-04	3.57775E-05	7.41982E-01
3.3300E+02	2.7777E+00	9.18650E-04	3.44385E-05	7.43819E-01
3.3500E+02	2.7444E+00	9.32750E-04	3.47005E-05	7.45685E-01
3.3700E+02	2.7118E+00	9.68850E-04	3.53615E-05	7.47623E-01
3.3900E+02	2.6798E+00	1.00795E-03	3.60645E-05	7.49638E-01
3.4100E+02	2.6483E+00	1.00100E-03	3.59405E-05	7.51640E-01
3.4300E+02	2.6174E+00	9.10000E-04	3.42765E-05	7.53460E-01
3.4500E+02	2.5870E+00	1.00770E-03	3.60600E-05	7.55476E-01
3.4700E+02	2.5571E+00	9.38850E-04	3.48130E-05	7.57354E-01
3.4900E+02	2.5278E+00	8.63850E-04	3.34010E-05	7.59081E-01
3.5100E+02	2.4990E+00	8.52700E-04	3.31860E-05	7.60787E-01
3.5300E+02	2.4706E+00	8.72850E-04	3.35740E-05	7.62532E-01
3.5500E+02	2.4427E+00	8.50750E-04	3.31480E-05	7.64234E-01
3.5700E+02	2.4153E+00	8.24550E-04	3.26370E-05	7.65883E-01
3.5900E+02	2.3884E+00	8.55050E-04	3.32315E-05	7.67593E-01
3.6100E+02	2.3619E+00	7.83500E-04	3.18200E-05	7.69160E-01
3.6300E+02	2.3359E+00	8.91850E-04	3.39350E-05	7.70944E-01
3.6500E+02	2.3102E+00	8.96650E-04	3.40255E-05	7.72737E-01
3.6700E+02	2.2850E+00	7.76450E-04	3.16775E-05	7.74290E-01
3.6900E+02	2.2602E+00	7.12150E-04	3.03465E-05	7.75714E-01
3.7100E+02	2.2359E+00	8.05200E-04	3.22540E-05	7.77325E-01
3.7300E+02	2.2119E+00	8.06250E-04	3.22750E-05	7.78937E-01
3.7500E+02	2.1882E+00	8.08200E-04	3.23145E-05	7.80554E-01
3.7700E+02	2.1650E+00	6.99000E-04	3.00670E-05	7.81952E-01
3.7900E+02	2.1421E+00	6.96100E-04	3.00050E-05	7.83344E-01
3.8100E+02	2.1196E+00	6.87950E-04	2.98295E-05	7.84720E-01
3.8300E+02	2.0975E+00	6.84450E-04	2.97550E-05	7.86089E-01
3.8500E+02	2.0757E+00	6.04950E-04	2.79870E-05	7.87298E-01
3.8700E+02	2.0542E+00	5.72050E-04	2.72225E-05	7.88443E-01
3.8900E+02	2.0331E+00	6.41100E-04	2.88045E-05	7.89725E-01
3.9100E+02	2.0123E+00	5.85700E-04	2.75415E-05	7.90896E-01
3.9300E+02	1.9918E+00	5.53150E-04	2.67735E-05	7.92002E-01
3.9500E+02	1.9716E+00	5.30750E-04	2.62300E-05	7.93064E-01
3.9700E+02	1.9517E+00	4.97215E-04	2.53960E-05	7.94058E-01
3.9900E+02	1.9321E+00	4.62130E-04	2.44935E-05	7.94983E-01
4.0100E+02	1.9128E+00	5.05750E-04	2.56110E-05	7.95994E-01
4.0300E+02	1.8938E+00	4.76715E-04	2.48725E-05	7.96948E-01
4.0500E+02	1.8751E+00	4.36985E-04	2.38255E-05	7.97822E-01
4.0700E+02	1.8567E+00	3.99780E-04	2.28010E-05	7.98621E-01
4.0900E+02	1.8385E+00	4.34230E-04	2.37510E-05	7.99490E-01
4.1100E+02	1.8206E+00	3.51480E-04	2.13980E-05	8.00193E-01
4.1300E+02	1.8030E+00	4.00155E-04	2.28115E-05	8.00993E-01
4.1500E+02	1.7856E+00	3.66595E-04	2.18470E-05	8.01726E-01
4.1700E+02	1.7685E+00	3.66680E-04	2.18495E-05	8.02459E-01

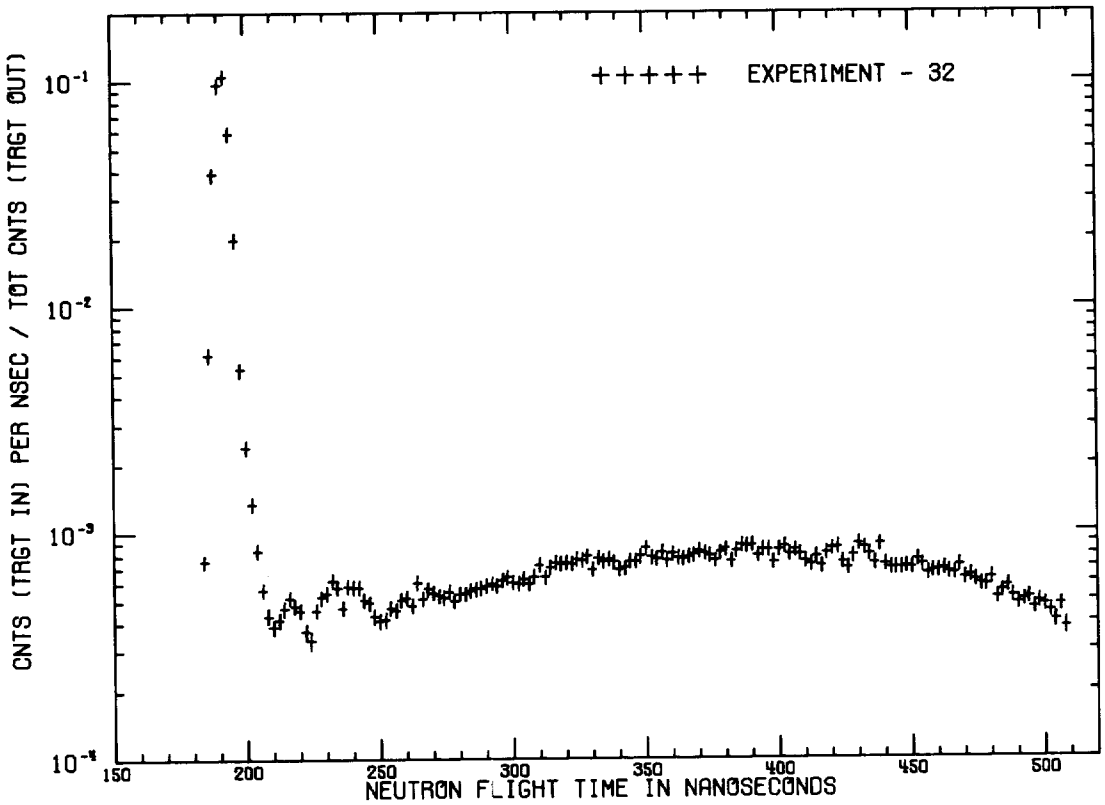

IRON - 0.9 M.F.P. - 120 DEG.

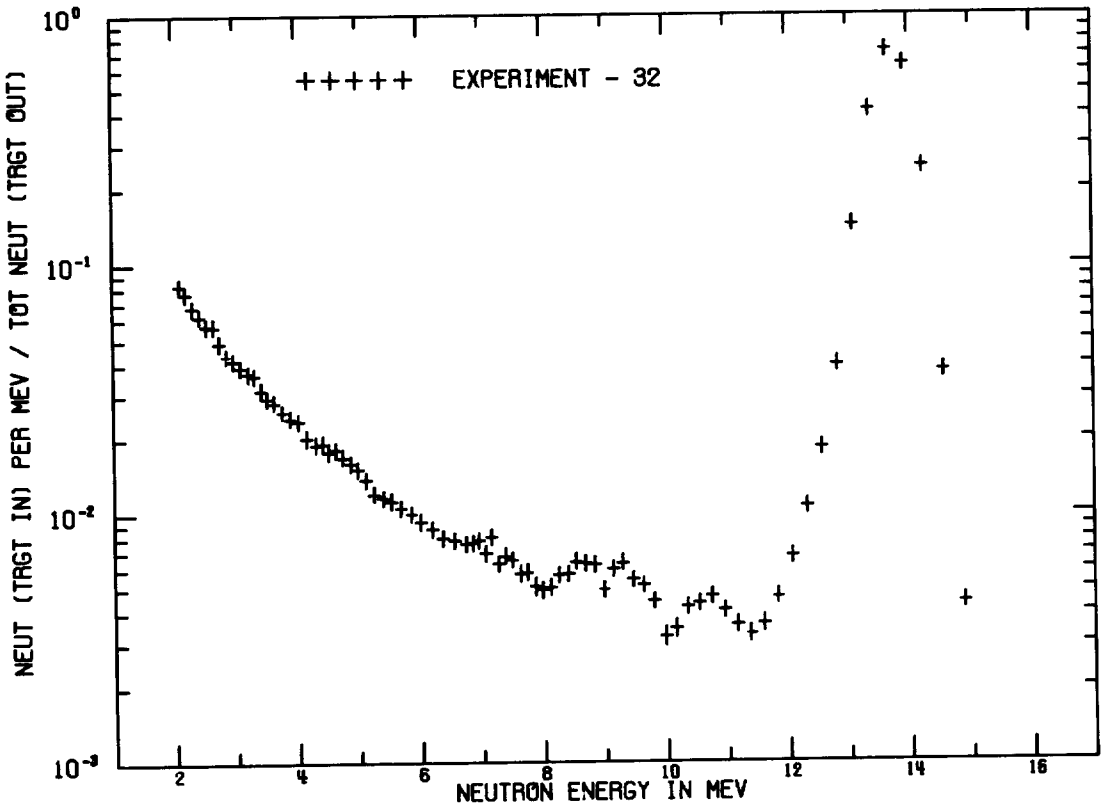

IRON - 0.9 M.F.P. - 120 DEG.

IRON - 0.9 M.F.P. - 120 DEG.
FLIGHTPATH = 975.20 CM DETECTOR = NE213 FWHM = 3 NS

TIME(NS)	CALCULATED ENERGY(MEV)	CNT/NS/SOURCE	ERROR	INTEGRAL
1.8300E+02	1.5203E+01	1.04885E-04	1.62815E-05	2.09770E-04
1.8500E+02	1.4868E+01	7.47700E-04	4.19105E-05	1.70517E-03
1.8700E+02	1.4544E+01	6.14100E-03	1.19455E-04	1.39872E-02
1.8900E+02	1.4231E+01	3.87495E-02	2.99870E-04	9.14862E-02
1.9100E+02	1.3928E+01	9.64700E-02	4.73110E-04	2.84426E-01
1.9300E+02	1.3634E+01	1.05555E-01	4.94890E-04	4.95536E-01
1.9500E+02	1.3350E+01	5.84750E-02	3.68355E-04	6.12486E-01
1.9700E+02	1.3075E+01	1.97195E-02	2.13945E-04	6.51925E-01
1.9900E+02	1.2808E+01	5.28550E-03	1.10835E-04	6.62496E-01
2.0100E+02	1.2549E+01	2.38780E-03	7.45750E-05	6.67272E-01
2.0300E+02	1.2298E+01	1.34825E-03	5.61250E-05	6.69968E-01
2.0500E+02	1.2055E+01	8.36250E-04	4.42935E-05	6.71641E-01
2.0700E+02	1.1819E+01	5.61950E-04	3.64065E-05	6.72765E-01
2.0900E+02	1.1589E+01	4.29545E-04	3.19110E-05	6.73624E-01
2.1100E+02	1.1367E+01	3.83360E-04	3.01855E-05	6.74390E-01
2.1300E+02	1.1150E+01	4.10385E-04	3.12065E-05	6.75211E-01
2.1500E+02	1.0940E+01	4.62080E-04	3.30725E-05	6.76135E-01
2.1700E+02	1.0736E+01	5.15550E-04	3.48970E-05	6.77167E-01
2.1900E+02	1.0538E+01	4.75265E-04	3.35320E-05	6.78117E-01
2.2100E+02	1.0345E+01	4.54500E-04	3.28055E-05	6.79026E-01
2.2300E+02	1.0157E+01	3.65235E-04	2.94810E-05	6.79757E-01
2.2500E+02	9.9743E+00	3.34235E-04	2.82345E-05	6.80425E-01
2.2700E+02	9.7966E+00	4.55450E-04	3.28395E-05	6.81336E-01
2.2900E+02	9.6236E+00	5.18700E-04	3.50030E-05	6.82373E-01
2.3100E+02	9.4551E+00	5.38800E-04	3.56625E-05	6.83451E-01
2.3300E+02	9.2911E+00	6.17050E-04	3.81220E-05	6.84685E-01
2.3500E+02	9.1313E+00	5.71950E-04	3.67250E-05	6.85829E-01
2.3700E+02	8.9757E+00	4.65110E-04	3.31790E-05	6.86759E-01
2.3900E+02	8.8240E+00	5.79350E-04	3.69575E-05	6.87918E-01
2.4100E+02	8.6761E+00	5.74350E-04	3.68010E-05	6.89066E-01
2.4300E+02	8.5319E+00	5.75050E-04	3.68220E-05	6.90217E-01
2.4500E+02	8.3913E+00	5.04050E-04	3.45140E-05	6.91225E-01
2.4700E+02	8.2542E+00	4.90085E-04	3.40410E-05	6.92205E-01
2.4900E+02	8.1204E+00	4.27320E-04	3.18300E-05	6.93060E-01
2.5100E+02	7.9899E+00	4.07340E-04	3.10935E-05	6.93874E-01
2.5300E+02	7.8625E+00	4.13155E-04	3.13095E-05	6.94700E-01
2.5500E+02	7.7381E+00	4.63400E-04	3.31190E-05	6.95627E-01
2.5700E+02	7.6167E+00	4.54000E-04	3.27880E-05	6.96535E-01
2.5900E+02	7.4981E+00	5.02250E-04	3.44525E-05	6.97540E-01
2.6100E+02	7.3822E+00	5.14000E-04	3.48460E-05	6.98568E-01
2.6300E+02	7.2691E+00	4.75755E-04	3.35490E-05	6.99519E-01
2.6500E+02	7.1585E+00	5.99850E-04	3.75965E-05	7.00719E-01
2.6700E+02	7.0505E+00	5.08000E-04	3.46455E-05	7.01735E-01
2.6900E+02	6.9449E+00	5.63450E-04	3.64555E-05	7.02862E-01
2.7100E+02	6.8416E+00	5.42250E-04	3.57750E-05	7.03946E-01

2.7300E+02	6.7407E+00	5.24900E-04	3.52080E-05	7.04996E-01
2.7500E+02	6.6419E+00	5.14500E-04	3.48635E-05	7.06025E-01
2.7700E+02	6.5454E+00	5.45150E-04	3.58690E-05	7.07116E-01
2.7900E+02	6.4509E+00	4.98210E-04	3.43165E-05	7.08112E-01
2.8100E+02	6.3585E+00	5.35150E-04	3.55435E-05	7.09182E-01
2.8300E+02	6.2680E+00	5.37500E-04	3.56200E-05	7.10257E-01
2.8500E+02	6.1795E+00	5.54750E-04	3.61765E-05	7.11367E-01
2.8700E+02	6.0928E+00	5.64000E-04	3.64735E-05	7.12495E-01
2.8900E+02	6.0080E+00	5.69450E-04	3.66450E-05	7.13634E-01
2.9100E+02	5.9249E+00	5.81000E-04	3.70100E-05	7.14796E-01
2.9300E+02	5.8435E+00	5.92500E-04	3.73690E-05	7.15981E-01
2.9500E+02	5.7638E+00	5.82950E-04	3.70710E-05	7.17147E-01
2.9700E+02	5.6858E+00	6.13000E-04	3.79985E-05	7.18373E-01
2.9900E+02	5.6093E+00	6.33450E-04	3.86190E-05	7.19639E-01
3.0100E+02	5.5343E+00	5.99800E-04	3.75940E-05	7.20839E-01
3.0300E+02	5.4609E+00	5.93050E-04	3.73850E-05	7.22025E-01
3.0500E+02	5.3889E+00	6.25550E-04	3.83800E-05	7.23276E-01
3.0700E+02	5.3183E+00	5.93650E-04	3.74040E-05	7.24464E-01
3.0900E+02	5.2491E+00	6.34850E-04	3.86600E-05	7.25733E-01
3.1100E+02	5.1812E+00	7.18300E-04	4.10885E-05	7.27170E-01
3.1300E+02	5.1147E+00	6.33550E-04	3.86220E-05	7.28437E-01
3.1500E+02	5.0494E+00	7.00650E-04	4.05865E-05	7.29838E-01
3.1700E+02	4.9854E+00	7.35750E-04	4.15785E-05	7.31310E-01
3.1900E+02	4.9226E+00	7.25300E-04	4.12850E-05	7.32760E-01
3.2100E+02	4.8610E+00	7.31600E-04	4.14625E-05	7.34224E-01
3.2300E+02	4.8005E+00	7.23900E-04	4.12465E-05	7.35671E-01
3.2500E+02	4.7412E+00	7.62700E-04	4.23235E-05	7.37197E-01
3.2700E+02	4.6829E+00	7.52550E-04	4.20445E-05	7.38702E-01
3.2900E+02	4.6257E+00	7.82300E-04	4.28575E-05	7.40266E-01
3.3100E+02	4.5696E+00	6.83250E-04	4.00870E-05	7.41633E-01
3.3300E+02	4.5145E+00	7.66450E-04	4.24255E-05	7.43166E-01
3.3500E+02	4.4603E+00	7.39250E-04	4.16760E-05	7.44644E-01
3.3700E+02	4.4072E+00	7.61550E-04	4.22925E-05	7.46167E-01
3.3900E+02	4.3550E+00	7.38300E-04	4.16495E-05	7.47644E-01
3.4100E+02	4.3037E+00	6.86200E-04	4.01725E-05	7.49016E-01
3.4300E+02	4.2533E+00	6.95600E-04	4.04420E-05	7.50408E-01
3.4500E+02	4.2038E+00	7.45050E-04	4.18370E-05	7.51898E-01
3.4700E+02	4.1552E+00	7.42550E-04	4.17670E-05	7.53383E-01
3.4900E+02	4.1074E+00	7.82250E-04	4.28555E-05	7.54947E-01
3.5100E+02	4.0604E+00	8.50600E-04	4.46670E-05	7.56649E-01
3.5300E+02	4.0142E+00	7.73600E-04	4.26205E-05	7.58196E-01
3.5500E+02	3.9688E+00	7.63000E-04	4.23310E-05	7.59722E-01
3.5700E+02	3.9242E+00	8.16600E-04	4.37750E-05	7.61355E-01
3.5900E+02	3.8803E+00	7.49950E-04	4.19725E-05	7.62855E-01
3.6100E+02	3.8372E+00	8.00600E-04	4.33500E-05	7.64456E-01
3.6300E+02	3.7948E+00	7.66650E-04	4.24305E-05	7.65989E-01
3.6500E+02	3.7531E+00	7.57650E-04	4.21845E-05	7.67505E-01
3.6700E+02	3.7120E+00	7.75900E-04	4.26830E-05	7.69056E-01

3.6900E+02	3.6717E+00	7.91750E-04	4.31130E-05	7.70640E-01
3.7100E+02	3.6319E+00	8.24750E-04	4.39915E-05	7.72289E-01
3.7300E+02	3.5929E+00	8.05800E-04	4.34880E-05	7.73901E-01
3.7500E+02	3.5544E+00	7.83800E-04	4.28970E-05	7.75469E-01
3.7700E+02	3.5166E+00	7.47700E-04	4.19095E-05	7.76964E-01
3.7900E+02	3.4794E+00	8.10750E-04	4.36205E-05	7.78586E-01
3.8100E+02	3.4428E+00	8.40050E-04	4.43930E-05	7.80266E-01
3.8300E+02	3.4067E+00	7.40800E-04	4.17185E-05	7.81747E-01
3.8500E+02	3.3712E+00	8.25550E-04	4.40115E-05	7.83398E-01
3.8700E+02	3.3363E+00	8.76600E-04	4.53380E-05	7.85152E-01
3.8900E+02	3.3019E+00	8.67050E-04	4.50925E-05	7.86886E-01
3.9100E+02	3.2680E+00	8.75150E-04	4.53010E-05	7.88636E-01
3.9300E+02	3.2346E+00	7.90450E-04	4.30770E-05	7.90217E-01
3.9500E+02	3.2018E+00	8.31200E-04	4.41605E-05	7.91879E-01
3.9700E+02	3.1695E+00	8.34850E-04	4.42560E-05	7.93549E-01
3.9900E+02	3.1376E+00	7.36700E-04	4.16050E-05	7.95022E-01
4.0100E+02	3.1062E+00	8.31500E-04	4.41690E-05	7.96685E-01
4.0300E+02	3.0753E+00	8.63350E-04	4.49980E-05	7.98412E-01
4.0500E+02	3.0449E+00	7.93200E-04	4.31520E-05	7.99998E-01
4.0700E+02	3.0149E+00	8.30700E-04	4.41470E-05	8.01660E-01
4.0900E+02	2.9853E+00	7.97700E-04	4.32720E-05	8.03255E-01
4.1100E+02	2.9562E+00	7.44250E-04	4.18140E-05	8.04744E-01
4.1300E+02	2.9275E+00	7.18550E-04	4.10950E-05	8.06181E-01
4.1500E+02	2.8992E+00	7.80950E-04	4.28200E-05	8.07743E-01
4.1700E+02	2.8714E+00	7.04450E-04	4.06955E-05	8.09152E-01
4.1900E+02	2.8439E+00	8.03950E-04	4.34390E-05	8.10760E-01
4.2100E+02	2.8168E+00	8.40450E-04	4.44025E-05	8.12440E-01
4.2300E+02	2.7901E+00	8.56500E-04	4.48205E-05	8.14153E-01
4.2500E+02	2.7638E+00	7.33000E-04	4.15020E-05	8.15619E-01
4.2700E+02	2.7379E+00	6.91300E-04	4.03190E-05	8.17002E-01
4.2900E+02	2.7123E+00	7.82750E-04	4.28690E-05	8.18568E-01
4.3100E+02	2.6871E+00	8.82900E-04	4.54985E-05	8.20333E-01
4.3300E+02	2.6622E+00	8.49850E-04	4.46480E-05	8.22033E-01
4.3500E+02	2.6377E+00	7.95400E-04	4.32110E-05	8.23624E-01
4.3700E+02	2.6135E+00	7.24400E-04	4.12595E-05	8.25073E-01
4.3900E+02	2.5896E+00	8.79250E-04	4.54060E-05	8.26831E-01
4.4100E+02	2.5661E+00	7.15150E-04	4.09985E-05	8.28261E-01
4.4300E+02	2.5429E+00	6.89000E-04	4.02530E-05	8.29639E-01
4.4500E+02	2.5200E+00	6.94900E-04	4.04225E-05	8.31029E-01
4.4700E+02	2.4974E+00	6.91700E-04	4.03300E-05	8.32413E-01
4.4900E+02	2.4751E+00	7.00900E-04	4.05945E-05	8.33814E-01
4.5100E+02	2.4531E+00	6.92900E-04	4.03640E-05	8.35200E-01
4.5300E+02	2.4314E+00	7.53650E-04	4.20750E-05	8.36708E-01
4.5500E+02	2.4100E+00	7.11800E-04	4.09045E-05	8.38131E-01
4.5700E+02	2.3889E+00	6.55100E-04	3.92630E-05	8.39441E-01
4.5900E+02	2.3680E+00	6.68000E-04	3.96425E-05	8.40777E-01
4.6100E+02	2.3475E+00	6.72250E-04	3.97675E-05	8.42122E-01
4.6300E+02	2.3271E+00	6.81050E-04	4.00230E-05	8.43484E-01

4.6500E+02	2.3071E+00	6.60300E-04	3.94160E-05	8.44805E-01
4.6700E+02	2.2873E+00	6.51050E-04	3.91445E-05	8.46107E-01
4.6900E+02	2.2678E+00	7.07100E-04	4.07705E-05	8.47521E-01
4.7100E+02	2.2485E+00	6.25450E-04	3.83775E-05	8.48772E-01
4.7300E+02	2.2294E+00	6.34900E-04	3.86615E-05	8.50042E-01
4.7500E+02	2.2106E+00	6.07000E-04	3.78150E-05	8.51256E-01
4.7700E+02	2.1921E+00	5.83250E-04	3.70800E-05	8.52422E-01
4.7900E+02	2.1737E+00	5.82400E-04	3.70530E-05	8.53587E-01
4.8100E+02	2.1556E+00	6.21000E-04	3.82430E-05	8.54829E-01
4.8300E+02	2.1378E+00	5.11300E-04	3.47565E-05	8.55851E-01
4.8500E+02	2.1201E+00	5.44400E-04	3.58445E-05	8.56940E-01
4.8700E+02	2.1027E+00	5.71350E-04	3.67055E-05	8.58083E-01
4.8900E+02	2.0855E+00	5.17050E-04	3.49470E-05	8.59117E-01
4.9100E+02	2.0684E+00	4.82060E-04	3.37660E-05	8.60081E-01
4.9300E+02	2.0516E+00	4.96120E-04	3.42460E-05	8.61073E-01
4.9500E+02	2.0350E+00	5.11100E-04	3.47495E-05	8.62096E-01
4.9700E+02	2.0186E+00	4.61315E-04	3.30460E-05	8.63018E-01
4.9900E+02	2.0024E+00	4.88495E-04	3.39865E-05	8.63995E-01
5.0100E+02	1.9864E+00	4.73135E-04	3.34580E-05	8.64941E-01
5.0300E+02	1.9706E+00	4.43735E-04	3.24230E-05	8.65829E-01
5.0500E+02	1.9550E+00	4.03240E-04	3.09400E-05	8.66635E-01
5.0700E+02	1.9396E+00	4.72825E-04	3.34475E-05	8.67581E-01
5.0900E+02	1.9243E+00	3.77385E-04	2.99550E-05	8.68336E-01

Iron 2.9 m.f.p.

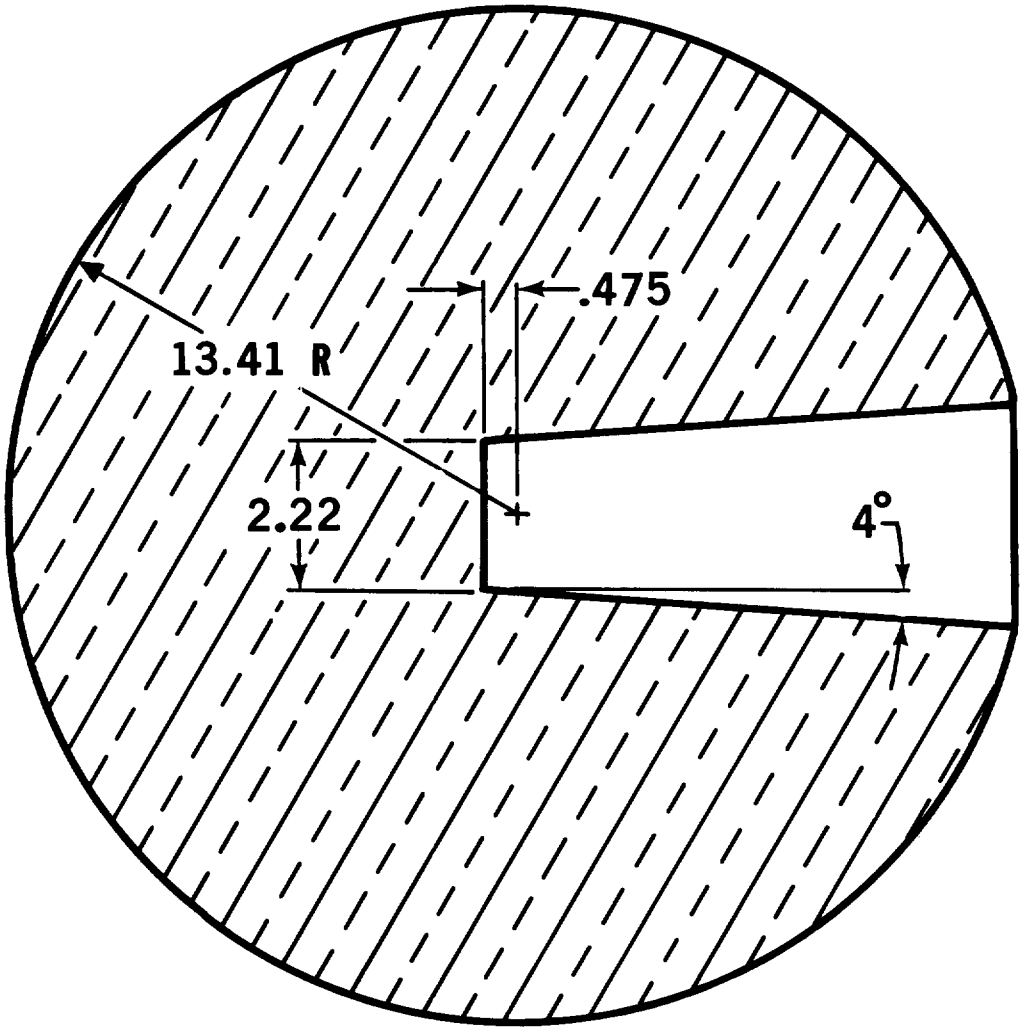

All Dimensions in Centimeters

Fe > 97.0%

C < 1.2%

Mn < 1.0%

P < 0.7%

S < 0.1%

$\rho = 7.85\ g/cm^3$

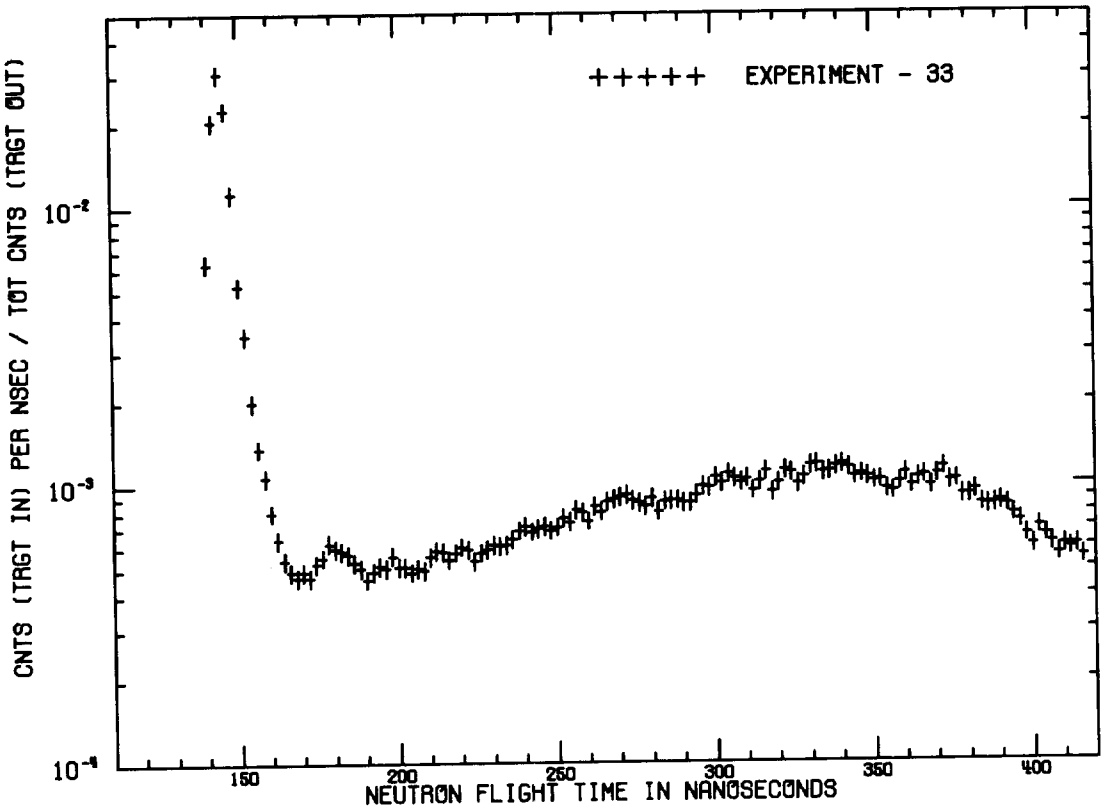

IRON - 2.9 M.F.P. - 30 DEG.

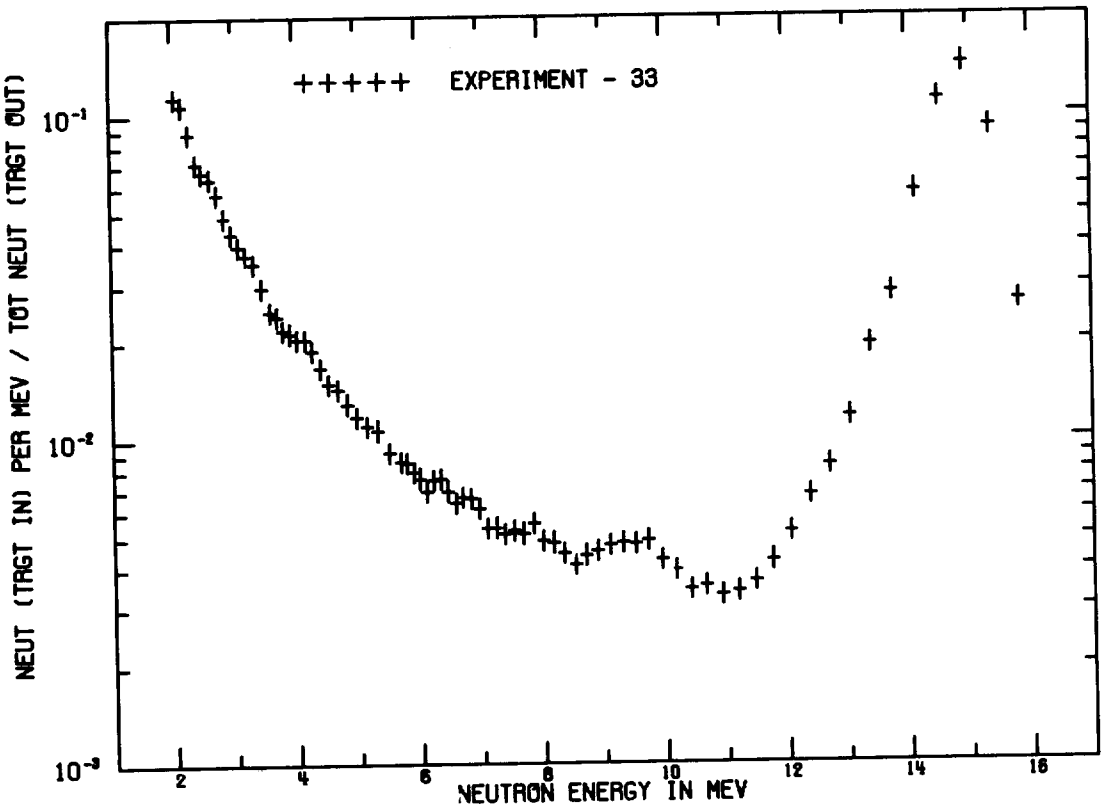

IRON - 2.9 M.F.P. - 30 DEG.

IRON - 2.9 M.F.P. - 30 DEG.
FLIGHTPATH = 766.00 CM DETECTOR = NE213 FWHM = 3 NS

TIME(NS)	CALCULATED ENERGY(MEV)	CNT/NS/SOURCE	ERROR	INTEGRAL
1.3900E+02	1.6285E+01	5.20600E-04	2.60675E-05	1.04120E-03
1.4100E+02	1.5815E+01	6.30700E-03	9.05250E-05	1.36552E-02
1.4300E+02	1.5365E+01	2.05435E-02	1.63350E-04	5.47422E-02
1.4500E+02	1.4934E+01	3.06840E-02	1.99630E-04	1.16110E-01
1.4700E+02	1.4521E+01	2.26885E-02	1.71665E-04	1.61487E-01
1.4900E+02	1.4125E+01	1.12355E-02	1.20810E-04	1.83958E-01
1.5100E+02	1.3745E+01	5.23950E-03	8.25100E-05	1.94437E-01
1.5300E+02	1.3380E+01	3.46730E-03	6.71300E-05	2.01372E-01
1.5500E+02	1.3030E+01	1.98850E-03	5.08500E-05	2.05349E-01
1.5700E+02	1.2693E+01	1.36520E-03	4.21470E-05	2.08079E-01
1.5900E+02	1.2370E+01	1.07005E-03	3.73235E-05	2.10219E-01
1.6100E+02	1.2058E+01	7.99400E-04	3.22740E-05	2.11818E-01
1.6300E+02	1.1759E+01	6.39200E-04	2.88710E-05	2.13096E-01
1.6500E+02	1.1470E+01	5.36350E-04	2.64570E-05	2.14169E-01
1.6700E+02	1.1192E+01	4.86805E-04	2.52110E-05	2.15143E-01
1.6900E+02	1.0924E+01	4.65810E-04	2.46645E-05	2.16074E-01
1.7100E+02	1.0666E+01	4.87985E-04	2.52415E-05	2.17050E-01
1.7300E+02	1.0417E+01	4.64565E-04	2.46315E-05	2.17980E-01
1.7500E+02	1.0176E+01	5.22800E-04	2.61215E-05	2.19025E-01
1.7700E+02	9.9438E+00	5.49300E-04	2.67725E-05	2.20124E-01
1.7900E+02	9.7194E+00	6.17800E-04	2.83850E-05	2.21359E-01
1.8100E+02	9.5025E+00	5.90450E-04	2.77530E-05	2.22540E-01
1.8300E+02	9.2929E+00	5.81050E-04	2.75315E-05	2.23702E-01
1.8500E+02	9.0901E+00	5.62450E-04	2.70900E-05	2.24827E-01
1.8700E+02	8.8939E+00	5.27050E-04	2.62270E-05	2.25881E-01
1.8900E+02	8.7041E+00	5.02350E-04	2.56085E-05	2.26886E-01
1.9100E+02	8.5203E+00	4.58350E-04	2.44675E-05	2.27803E-01
1.9300E+02	8.3423E+00	4.87420E-04	2.52270E-05	2.28778E-01
1.9500E+02	8.1698E+00	5.11300E-04	2.58345E-05	2.29800E-01
1.9700E+02	8.0026E+00	5.02600E-04	2.56150E-05	2.30805E-01
1.9900E+02	7.8406E+00	5.56250E-04	2.69410E-05	2.31918E-01
2.0100E+02	7.6834E+00	5.05950E-04	2.57000E-05	2.32930E-01
2.0300E+02	7.5310E+00	5.07800E-04	2.57465E-05	2.33945E-01
2.0500E+02	7.3830E+00	4.84775E-04	2.51590E-05	2.34915E-01
2.0700E+02	7.2394E+00	5.01200E-04	2.55785E-05	2.35917E-01
2.0900E+02	7.0999E+00	4.91415E-04	2.53295E-05	2.36900E-01
2.1100E+02	6.9645E+00	5.51700E-04	2.68305E-05	2.38004E-01
2.1300E+02	6.8329E+00	5.80700E-04	2.75240E-05	2.39165E-01
2.1500E+02	6.7050E+00	5.73050E-04	2.73430E-05	2.40311E-01
2.1700E+02	6.5807E+00	5.38750E-04	2.65150E-05	2.41389E-01
2.1900E+02	6.4598E+00	5.70500E-04	2.72815E-05	2.42530E-01
2.2100E+02	6.3422E+00	5.99050E-04	2.79535E-05	2.43728E-01
2.2300E+02	6.2278E+00	5.85000E-04	2.76245E-05	2.44898E-01
2.2500E+02	6.1165E+00	5.31150E-04	2.63290E-05	2.45960E-01
2.2700E+02	6.0082E+00	5.71800E-04	2.73130E-05	2.47104E-01

2.2900E+02	5.9027E+00	5.85700E-04	2.76410E-05	2.48275E-01
2.3100E+02	5.8000E+00	6.09500E-04	2.81950E-05	2.49494E-01
2.3300E+02	5.6999E+00	6.03000E-04	2.80450E-05	2.50700E-01
2.3500E+02	5.6025E+00	6.09250E-04	2.81890E-05	2.51918E-01
2.3700E+02	5.5075E+00	6.38050E-04	2.88445E-05	2.53195E-01
2.3900E+02	5.4149E+00	6.84350E-04	2.98685E-05	2.54563E-01
2.4100E+02	5.3246E+00	7.08100E-04	3.03805E-05	2.55979E-01
2.4300E+02	5.2366E+00	6.78900E-04	2.97500E-05	2.57337E-01
2.4500E+02	5.1508E+00	6.93200E-04	3.00605E-05	2.58724E-01
2.4700E+02	5.0670E+00	7.09450E-04	3.04095E-05	2.60143E-01
2.4900E+02	4.9853E+00	6.85800E-04	2.99000E-05	2.61514E-01
2.5100E+02	4.9056E+00	7.05250E-04	3.03200E-05	2.62925E-01
2.5300E+02	4.8277E+00	7.55550E-04	3.13785E-05	2.64436E-01
2.5500E+02	4.7517E+00	7.33900E-04	3.09270E-05	2.65904E-01
2.5700E+02	4.6775E+00	8.11150E-04	3.25090E-05	2.67526E-01
2.5900E+02	4.6050E+00	7.92850E-04	3.21415E-05	2.69112E-01
2.6100E+02	4.5342E+00	7.39100E-04	3.10365E-05	2.70590E-01
2.6300E+02	4.4650E+00	8.32100E-04	3.29245E-05	2.72254E-01
2.6500E+02	4.3974E+00	7.99850E-04	3.22825E-05	2.73854E-01
2.6700E+02	4.3313E+00	8.66850E-04	3.36030E-05	2.75587E-01
2.6900E+02	4.2667E+00	8.82750E-04	3.39085E-05	2.77353E-01
2.7100E+02	4.2035E+00	8.97550E-04	3.41915E-05	2.79148E-01
2.7300E+02	4.1417E+00	9.15300E-04	3.45270E-05	2.80979E-01
2.7500E+02	4.0813E+00	8.73800E-04	3.37375E-05	2.82726E-01
2.7700E+02	4.0222E+00	8.58900E-04	3.34495E-05	2.84444E-01
2.7900E+02	3.9644E+00	8.31850E-04	3.29200E-05	2.86108E-01
2.8100E+02	3.9078E+00	8.89250E-04	3.40330E-05	2.87886E-01
2.8300E+02	3.8524E+00	7.99750E-04	3.22805E-05	2.89486E-01
2.8500E+02	3.7982E+00	8.68600E-04	3.36375E-05	2.91223E-01
2.8700E+02	3.7452E+00	8.72400E-04	3.37100E-05	2.92968E-01
2.8900E+02	3.6932E+00	8.76900E-04	3.37965E-05	2.94721E-01
2.9100E+02	3.6423E+00	8.57250E-04	3.34170E-05	2.96436E-01
2.9300E+02	3.5925E+00	8.59850E-04	3.34675E-05	2.98156E-01
2.9500E+02	3.5437E+00	9.14500E-04	3.45120E-05	2.99985E-01
2.9700E+02	3.4958E+00	9.79100E-04	3.57060E-05	3.01943E-01
2.9900E+02	3.4490E+00	9.73400E-04	3.56025E-05	3.03890E-01
3.0100E+02	3.4030E+00	1.05855E-03	3.71230E-05	3.06007E-01
3.0300E+02	3.3580E+00	1.00715E-03	3.62130E-05	3.08021E-01
3.0500E+02	3.3139E+00	1.08775E-03	3.76305E-05	3.10197E-01
3.0700E+02	3.2706E+00	1.04695E-03	3.69200E-05	3.12290E-01
3.0900E+02	3.2282E+00	1.01550E-03	3.63620E-05	3.14321E-01
3.1100E+02	3.1866E+00	1.04550E-03	3.68940E-05	3.16412E-01
3.1300E+02	3.1458E+00	9.47200E-04	3.51215E-05	3.18307E-01
3.1500E+02	3.1058E+00	1.01665E-03	3.63825E-05	3.20340E-01
3.1700E+02	3.0665E+00	1.11120E-03	3.80330E-05	3.22563E-01
3.1900E+02	3.0280E+00	9.33650E-04	3.48700E-05	3.24430E-01
3.2100E+02	2.9902E+00	1.01160E-03	3.62925E-05	3.26453E-01
3.2300E+02	2.9531E+00	1.11840E-03	3.81560E-05	3.28690E-01

3.2500E+02	2.9167E+00	1.09785E-03	3.78045E-05	3.30886E-01
3.2700E+02	2.8810E+00	1.00240E-03	3.61275E-05	3.32890E-01
3.2900E+02	2.8459E+00	1.05590E-03	3.70765E-05	3.35002E-01
3.3100E+02	2.8115E+00	1.16195E-03	3.88895E-05	3.37326E-01
3.3300E+02	2.7777E+00	1.17885E-03	3.91710E-05	3.39684E-01
3.3500E+02	2.7444E+00	1.09750E-03	3.77985E-05	3.41879E-01
3.3700E+02	2.7118E+00	1.11025E-03	3.80170E-05	3.44099E-01
3.3900E+02	2.6798E+00	1.15055E-03	3.86990E-05	3.46400E-01
3.4100E+02	2.6483E+00	1.17920E-03	3.91770E-05	3.48759E-01
3.4300E+02	2.6174E+00	1.14080E-03	3.85350E-05	3.51040E-01
3.4500E+02	2.5870E+00	1.06230E-03	3.71890E-05	3.53165E-01
3.4700E+02	2.5571E+00	1.08410E-03	3.75675E-05	3.55333E-01
3.4900E+02	2.5278E+00	1.05825E-03	3.71180E-05	3.57450E-01
3.5100E+02	2.4990E+00	1.02435E-03	3.65195E-05	3.59498E-01
3.5300E+02	2.4706E+00	1.03170E-03	3.66505E-05	3.61562E-01
3.5500E+02	2.4427E+00	9.53650E-04	3.52405E-05	3.63469E-01
3.5700E+02	2.4153E+00	9.38350E-04	3.49575E-05	3.65346E-01
3.5900E+02	2.3884E+00	1.01300E-03	3.63175E-05	3.67372E-01
3.6100E+02	2.3619E+00	1.09130E-03	3.76910E-05	3.69554E-01
3.6300E+02	2.3359E+00	9.86250E-04	3.58360E-05	3.71527E-01
3.6500E+02	2.3102E+00	1.04660E-03	3.69130E-05	3.73620E-01
3.6700E+02	2.2850E+00	1.07395E-03	3.73915E-05	3.75768E-01
3.6900E+02	2.2602E+00	9.83150E-04	3.57795E-05	3.77734E-01
3.7100E+02	2.2359E+00	1.08085E-03	3.75110E-05	3.79896E-01
3.7300E+02	2.2119E+00	1.14660E-03	3.86325E-05	3.82189E-01
3.7500E+02	2.1882E+00	1.01870E-03	3.64195E-05	3.84227E-01
3.7700E+02	2.1650E+00	1.03315E-03	3.66765E-05	3.86293E-01
3.7900E+02	2.1421E+00	9.10250E-04	3.44315E-05	3.88113E-01
3.8100E+02	2.1196E+00	9.06950E-04	3.43690E-05	3.89927E-01
3.8300E+02	2.0975E+00	9.46350E-04	3.51055E-05	3.91820E-01
3.8500E+02	2.0757E+00	8.46500E-04	3.32075E-05	3.93513E-01
3.8700E+02	2.0542E+00	8.34050E-04	3.29630E-05	3.95181E-01
3.8900E+02	2.0331E+00	8.41900E-04	3.31170E-05	3.96865E-01
3.9100E+02	2.0123E+00	8.55600E-04	3.33850E-05	3.98576E-01
3.9300E+02	1.9918E+00	8.36750E-04	3.30165E-05	4.00250E-01
3.9500E+02	1.9716E+00	7.76000E-04	3.17995E-05	4.01802E-01
3.9700E+02	1.9517E+00	7.31600E-04	3.08785E-05	4.03265E-01
3.9900E+02	1.9321E+00	6.53050E-04	2.91805E-05	4.04571E-01
4.0100E+02	1.9128E+00	5.96950E-04	2.79040E-05	4.05765E-01
4.0300E+02	1.8938E+00	6.98850E-04	3.01830E-05	4.07162E-01
4.0500E+02	1.8751E+00	6.53450E-04	2.91900E-05	4.08469E-01
4.0700E+02	1.8567E+00	6.08500E-04	2.81715E-05	4.09686E-01
4.0900E+02	1.8385E+00	5.55550E-04	2.69230E-05	4.10797E-01
4.1100E+02	1.8206E+00	5.94900E-04	2.78565E-05	4.11987E-01
4.1300E+02	1.8030E+00	5.82450E-04	2.75645E-05	4.13152E-01
4.1500E+02	1.7856E+00	5.97950E-04	2.79275E-05	4.14348E-01
4.1700E+02	1.7685E+00	5.44800E-04	2.66630E-05	4.15438E-01

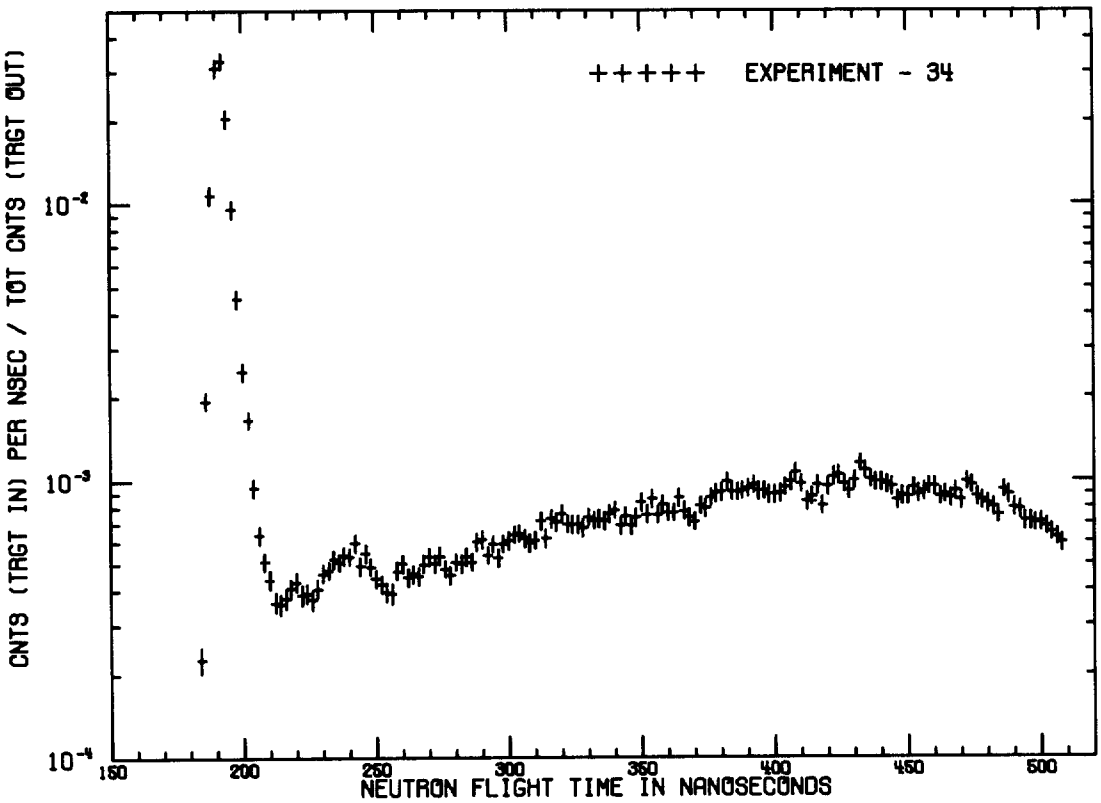

IRON - 2.9 M.F.P. - 120 DEG.

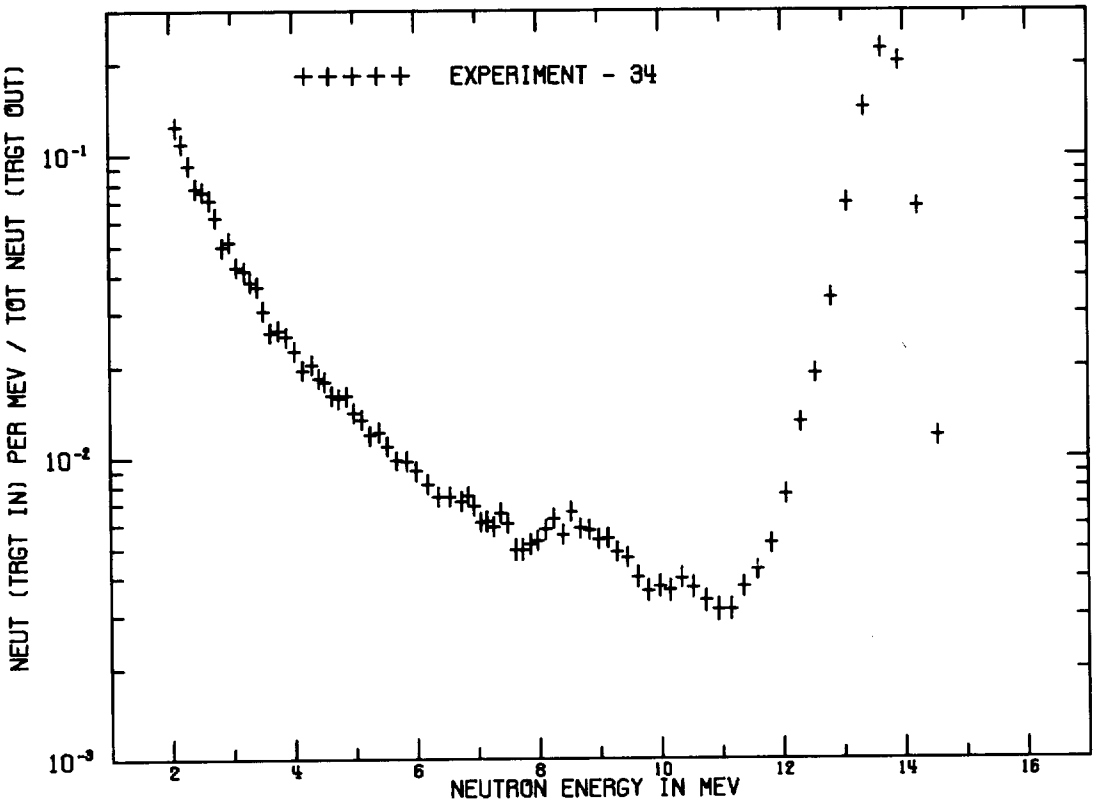

IRON - 2.9 M.F.P. - 120 DEG.

IRON - 2.9 M.F.P. - 120 DEG.
FLIGHTPATH = 975.20 CM DETECTOR = NE213 FWHM = 3 NS

TIME(NS)	CALCULATED ENERGY(MEV)	CNT/NS/SOURCE	ERROR	INTEGRAL
1.8300E+02	1.5203E+01	4.80710E-05	1.11310E-05	9.61420E-05
1.8500E+02	1.4868E+01	2.24695E-04	2.32040E-05	5.45532E-04
1.8700E+02	1.4544E+01	1.93370E-03	6.74500E-05	4.41293E-03
1.8900E+02	1.4231E+01	1.06675E-02	1.58265E-04	2.57479E-02
1.9100E+02	1.3928E+01	3.10165E-02	2.69830E-04	8.77809E-02
1.9300E+02	1.3634E+01	3.28885E-02	2.77850E-04	1.53558E-01
1.9500E+02	1.3350E+01	2.03640E-02	2.18645E-04	1.94286E-01
1.9700E+02	1.3075E+01	9.53550E-03	1.49635E-04	2.13357E-01
1.9900E+02	1.2808E+01	4.52610E-03	1.03120E-04	2.22409E-01
2.0100E+02	1.2549E+01	2.46470E-03	7.61300E-05	2.27339E-01
2.0300E+02	1.2298E+01	1.66035E-03	6.25150E-05	2.30659E-01
2.0500E+02	1.2055E+01	9.40250E-04	4.70940E-05	2.32540E-01
2.0700E+02	1.1819E+01	6.33500E-04	3.87030E-05	2.33807E-01
2.0900E+02	1.1589E+01	5.08300E-04	3.46990E-05	2.34823E-01
2.1100E+02	1.1367E+01	4.38350E-04	3.22475E-05	2.35700E-01
2.1300E+02	1.1150E+01	3.62515E-04	2.93580E-05	2.36425E-01
2.1500E+02	1.0940E+01	3.56110E-04	2.91010E-05	2.37137E-01
2.1700E+02	1.0736E+01	3.74285E-04	2.98250E-05	2.37886E-01
2.1900E+02	1.0538E+01	4.07315E-04	3.10975E-05	2.38700E-01
2.2100E+02	1.0345E+01	4.30810E-04	3.19720E-05	2.39562E-01
2.2300E+02	1.0157E+01	3.85540E-04	3.02645E-05	2.40333E-01
2.2500E+02	9.9743E+00	3.89820E-04	3.04300E-05	2.41113E-01
2.2700E+02	9.7966E+00	3.70545E-04	2.96775E-05	2.41854E-01
2.2900E+02	9.6236E+00	4.04950E-04	3.10080E-05	2.42664E-01
2.3100E+02	9.4551E+00	4.60720E-04	3.30515E-05	2.43585E-01
2.3300E+02	9.2911E+00	4.73445E-04	3.35000E-05	2.44532E-01
2.3500E+02	9.1313E+00	5.18350E-04	3.50380E-05	2.45569E-01
2.3700E+02	8.9757E+00	5.05800E-04	3.46160E-05	2.46580E-01
2.3900E+02	8.8240E+00	5.32800E-04	3.55190E-05	2.47646E-01
2.4100E+02	8.6761E+00	5.31000E-04	3.54590E-05	2.48708E-01
2.4300E+02	8.5319E+00	5.94300E-04	3.74960E-05	2.49897E-01
2.4500E+02	8.3913E+00	4.89845E-04	3.40700E-05	2.50876E-01
2.4700E+02	8.2542E+00	5.42750E-04	3.58455E-05	2.51962E-01
2.4900E+02	8.1204E+00	4.87305E-04	3.39820E-05	2.52936E-01
2.5100E+02	7.9899E+00	4.40590E-04	3.23290E-05	2.53818E-01
2.5300E+02	7.8625E+00	4.19650E-04	3.15595E-05	2.54657E-01
2.5500E+02	7.7381E+00	3.93765E-04	3.05820E-05	2.55444E-01
2.5700E+02	7.6167E+00	3.89465E-04	3.04165E-05	2.56223E-01
2.5900E+02	7.4981E+00	4.69565E-04	3.33640E-05	2.57163E-01
2.6100E+02	7.3822E+00	4.99115E-04	3.43875E-05	2.58161E-01
2.6300E+02	7.2691E+00	4.44465E-04	3.24690E-05	2.59050E-01
2.6500E+02	7.1585E+00	4.59155E-04	3.29955E-05	2.59968E-01
2.6700E+02	7.0505E+00	4.48970E-04	3.26315E-05	2.60866E-01
2.6900E+02	6.9449E+00	4.97130E-04	3.43200E-05	2.61860E-01
2.7100E+02	6.8416E+00	5.28050E-04	3.53615E-05	2.62916E-01

2.7300E+02	6.7407E+00	4.97570E-04	3.43350E-05	2.63911E-01
2.7500E+02	6.6419E+00	5.31650E-04	3.54805E-05	2.64975E-01
2.7700E+02	6.5454E+00	4.77245E-04	3.36330E-05	2.65929E-01
2.7900E+02	6.4509E+00	4.53600E-04	3.27975E-05	2.66836E-01
2.8100E+02	6.3585E+00	5.05850E-04	3.46175E-05	2.67848E-01
2.8300E+02	6.2680E+00	4.97845E-04	3.43445E-05	2.68844E-01
2.8500E+02	6.1795E+00	5.29550E-04	3.54120E-05	2.69903E-01
2.8700E+02	6.0928E+00	5.05250E-04	3.45970E-05	2.70913E-01
2.8900E+02	6.0080E+00	5.96800E-04	3.75730E-05	2.72107E-01
2.9100E+02	5.9249E+00	6.09400E-04	3.79645E-05	2.73326E-01
2.9300E+02	5.8435E+00	5.35300E-04	3.56005E-05	2.74396E-01
2.9500E+02	5.7638E+00	5.89600E-04	3.73475E-05	2.75576E-01
2.9700E+02	5.6858E+00	5.22850E-04	3.51885E-05	2.76621E-01
2.9900E+02	5.6093E+00	5.89950E-04	3.73590E-05	2.77801E-01
3.0100E+02	5.5343E+00	6.03400E-04	3.77790E-05	2.79008E-01
3.0300E+02	5.4609E+00	6.36750E-04	3.88010E-05	2.80282E-01
3.0500E+02	5.3889E+00	6.41750E-04	3.89530E-05	2.81565E-01
3.0700E+02	5.3183E+00	6.17100E-04	3.82020E-05	2.82799E-01
3.0900E+02	5.2491E+00	5.93450E-04	3.74695E-05	2.83986E-01
3.1100E+02	5.1812E+00	6.07300E-04	3.79005E-05	2.85201E-01
3.1300E+02	5.1147E+00	7.09200E-04	4.09340E-05	2.86619E-01
3.1500E+02	5.0494E+00	6.15750E-04	3.81605E-05	2.87851E-01
3.1700E+02	4.9854E+00	7.23350E-04	4.13375E-05	2.89297E-01
3.1900E+02	4.9226E+00	7.04050E-04	4.07860E-05	2.90705E-01
3.2100E+02	4.8610E+00	7.57400E-04	4.22930E-05	2.92220E-01
3.2300E+02	4.8005E+00	6.94300E-04	4.05045E-05	2.93509E-01
3.2500E+02	4.7412E+00	6.89550E-04	4.03665E-05	2.94988E-01
3.2700E+02	4.6829E+00	6.92700E-04	4.04580E-05	2.96373E-01
3.2900E+02	4.6257E+00	6.69650E-04	3.97835E-05	2.97713E-01
3.3100E+02	4.5696E+00	7.35500E-04	4.16815E-05	2.99184E-01
3.3300E+02	4.5145E+00	7.14200E-04	4.10780E-05	3.00612E-01
3.3500E+02	4.4603E+00	7.22400E-04	4.13105E-05	3.02057E-01
3.3700E+02	4.4072E+00	7.11550E-04	4.10020E-05	3.03480E-01
3.3900E+02	4.3550E+00	7.54450E-04	4.22115E-05	3.04989E-01
3.4100E+02	4.3037E+00	7.77500E-04	4.28470E-05	3.06544E-01
3.4300E+02	4.2533E+00	6.85250E-04	4.02415E-05	3.07914E-01
3.4500E+02	4.2038E+00	7.38600E-04	4.17680E-05	3.09392E-01
3.4700E+02	4.1552E+00	6.82550E-04	4.01630E-05	3.10757E-01
3.4900E+02	4.1074E+00	7.32800E-04	4.16055E-05	3.12222E-01
3.5100E+02	4.0604E+00	8.28400E-04	4.42195E-05	3.13879E-01
3.5300E+02	4.0142E+00	7.50700E-04	4.21070E-05	3.15380E-01
3.5500E+02	3.9688E+00	8.54850E-04	4.49160E-05	3.17090E-01
3.5700E+02	3.9242E+00	7.50300E-04	4.20955E-05	3.18591E-01
3.5900E+02	3.8803E+00	8.14950E-04	4.38615E-05	3.20221E-01
3.6100E+02	3.8372E+00	7.63500E-04	4.24625E-05	3.21748E-01
3.6300E+02	3.7948E+00	7.64050E-04	4.24780E-05	3.23276E-01
3.6500E+02	3.7531E+00	8.61150E-04	4.50805E-05	3.24998E-01
3.6700E+02	3.7120E+00	7.72600E-04	4.27125E-05	3.26543E-01

3.6900E+02	3.6717E+00	7.33350E-04	4.16200E-05	3.28010E-01
3.7100E+02	3.6319E+00	7.08400E-04	4.09110E-05	3.29427E-01
3.7300E+02	3.5929E+00	8.09800E-04	4.37230E-05	3.31046E-01
3.7500E+02	3.5544E+00	7.88850E-04	4.31570E-05	3.32624E-01
3.7700E+02	3.5166E+00	8.63950E-04	4.51530E-05	3.34352E-01
3.7900E+02	3.4794E+00	8.94200E-04	4.59320E-05	3.36140E-01
3.8100E+02	3.4428E+00	9.01350E-04	4.61150E-05	3.37943E-01
3.8300E+02	3.4067E+00	9.85700E-04	4.82130E-05	3.39914E-01
3.8500E+02	3.3712E+00	9.09150E-04	4.63130E-05	3.41733E-01
3.8700E+02	3.3363E+00	9.08000E-04	4.62835E-05	3.43549E-01
3.8900E+02	3.3019E+00	9.16450E-04	4.64975E-05	3.45382E-01
3.9100E+02	3.2680E+00	9.32300E-04	4.68960E-05	3.47246E-01
3.9300E+02	3.2346E+00	9.60600E-04	4.75990E-05	3.49167E-01
3.9500E+02	3.2018E+00	9.10550E-04	4.63475E-05	3.50989E-01
3.9700E+02	3.1695E+00	9.17350E-04	4.65205E-05	3.52823E-01
3.9900E+02	3.1376E+00	8.85150E-04	4.57010E-05	3.54594E-01
4.0100E+02	3.1062E+00	8.86200E-04	4.57275E-05	3.56366E-01
4.0300E+02	3.0753E+00	8.93950E-04	4.59255E-05	3.58154E-01
4.0500E+02	3.0449E+00	9.42950E-04	4.71615E-05	3.60040E-01
4.0700E+02	3.0149E+00	9.84100E-04	4.81740E-05	3.62008E-01
4.0900E+02	2.9853E+00	1.06745E-03	5.01650E-05	3.64143E-01
4.1100E+02	2.9562E+00	9.71050E-04	4.78555E-05	3.66085E-01
4.1300E+02	2.9275E+00	8.36950E-04	4.44455E-05	3.67759E-01
4.1500E+02	2.8992E+00	8.72850E-04	4.53840E-05	3.69505E-01
4.1700E+02	2.8714E+00	9.56850E-04	4.75060E-05	3.71418E-01
4.1900E+02	2.8439E+00	8.09900E-04	4.37260E-05	3.73038E-01
4.2100E+02	2.8168E+00	9.47850E-04	4.72830E-05	3.74934E-01
4.2300E+02	2.7901E+00	1.02960E-03	4.92700E-05	3.76993E-01
4.2500E+02	2.7638E+00	1.04160E-03	4.95560E-05	3.79076E-01
4.2700E+02	2.7379E+00	9.70800E-04	4.78500E-05	3.81018E-01
4.2900E+02	2.7123E+00	9.17150E-04	4.65150E-05	3.82852E-01
4.3100E+02	2.6871E+00	9.99750E-04	4.85535E-05	3.84852E-01
4.3300E+02	2.6622E+00	1.15450E-03	5.21600E-05	3.87161E-01
4.3500E+02	2.6377E+00	1.08720E-03	5.06250E-05	3.89335E-01
4.3700E+02	2.6135E+00	1.00770E-03	4.87455E-05	3.91350E-01
4.3900E+02	2.5896E+00	9.87200E-04	4.82500E-05	3.93325E-01
4.4100E+02	2.5661E+00	9.86150E-04	4.82240E-05	3.95297E-01
4.4300E+02	2.5429E+00	9.66250E-04	4.77375E-05	3.97230E-01
4.4500E+02	2.5200E+00	9.49550E-04	4.73250E-05	3.99129E-01
4.4700E+02	2.4974E+00	8.42700E-04	4.45980E-05	4.00814E-01
4.4900E+02	2.4751E+00	8.75950E-04	4.54635E-05	4.02566E-01
4.5100E+02	2.4531E+00	8.73850E-04	4.54090E-05	4.04314E-01
4.5300E+02	2.4314E+00	9.36950E-04	4.70115E-05	4.06188E-01
4.5500E+02	2.4100E+00	8.92150E-04	4.58800E-05	4.07972E-01
4.5700E+02	2.3889E+00	9.13500E-04	4.64230E-05	4.09799E-01
4.5900E+02	2.3680E+00	9.51250E-04	4.73680E-05	4.11701E-01
4.6100E+02	2.3475E+00	9.47450E-04	4.72730E-05	4.13596E-01
4.6300E+02	2.3271E+00	8.74700E-04	4.54310E-05	4.15346E-01

4.6500E+02	2.3071E+00	8.91600E-04	4.58660E-05	4.17129E-01
4.6700E+02	2.2873E+00	8.62150E-04	4.51065E-05	4.18853E-01
4.6900E+02	2.2678E+00	9.10800E-04	4.63540E-05	4.20675E-01
4.7100E+02	2.2485E+00	8.46150E-04	4.46880E-05	4.22367E-01
4.7300E+02	2.2294E+00	9.88450E-04	4.82810E-05	4.24344E-01
4.7500E+02	2.2106E+00	9.61700E-04	4.76255E-05	4.26267E-01
4.7700E+02	2.1921E+00	8.70800E-04	4.53310E-05	4.28009E-01
4.7900E+02	2.1737E+00	8.42400E-04	4.45895E-05	4.29694E-01
4.8100E+02	2.1556E+00	8.19700E-04	4.39885E-05	4.31333E-01
4.8300E+02	2.1378E+00	7.99250E-04	4.34390E-05	4.32932E-01
4.8500E+02	2.1201E+00	7.48500E-04	4.20460E-05	4.34429E-01
4.8700E+02	2.1027E+00	9.23450E-04	4.66735E-05	4.36276E-01
4.8900E+02	2.0855E+00	8.86550E-04	4.57365E-05	4.38049E-01
4.9100E+02	2.0684E+00	7.95250E-04	4.33315E-05	4.39639E-01
4.9300E+02	2.0516E+00	7.81650E-04	4.29605E-05	4.41202E-01
4.9500E+02	2.0350E+00	7.09700E-04	4.09480E-05	4.42622E-01
4.9700E+02	2.0186E+00	7.10300E-04	4.09660E-05	4.44042E-01
4.9900E+02	2.0024E+00	6.99750E-04	4.06630E-05	4.45442E-01
5.0100E+02	1.9864E+00	7.02350E-04	4.07375E-05	4.46847E-01
5.0300E+02	1.9706E+00	6.79900E-04	4.00855E-05	4.48206E-01
5.0500E+02	1.9550E+00	6.49200E-04	3.91770E-05	4.49505E-01
5.0700E+02	1.9396E+00	6.24650E-04	3.84340E-05	4.50754E-01
5.0900E+02	1.9243E+00	5.92250E-04	3.74315E-05	4.51939E-01

Iron 4.8 m.f.p.

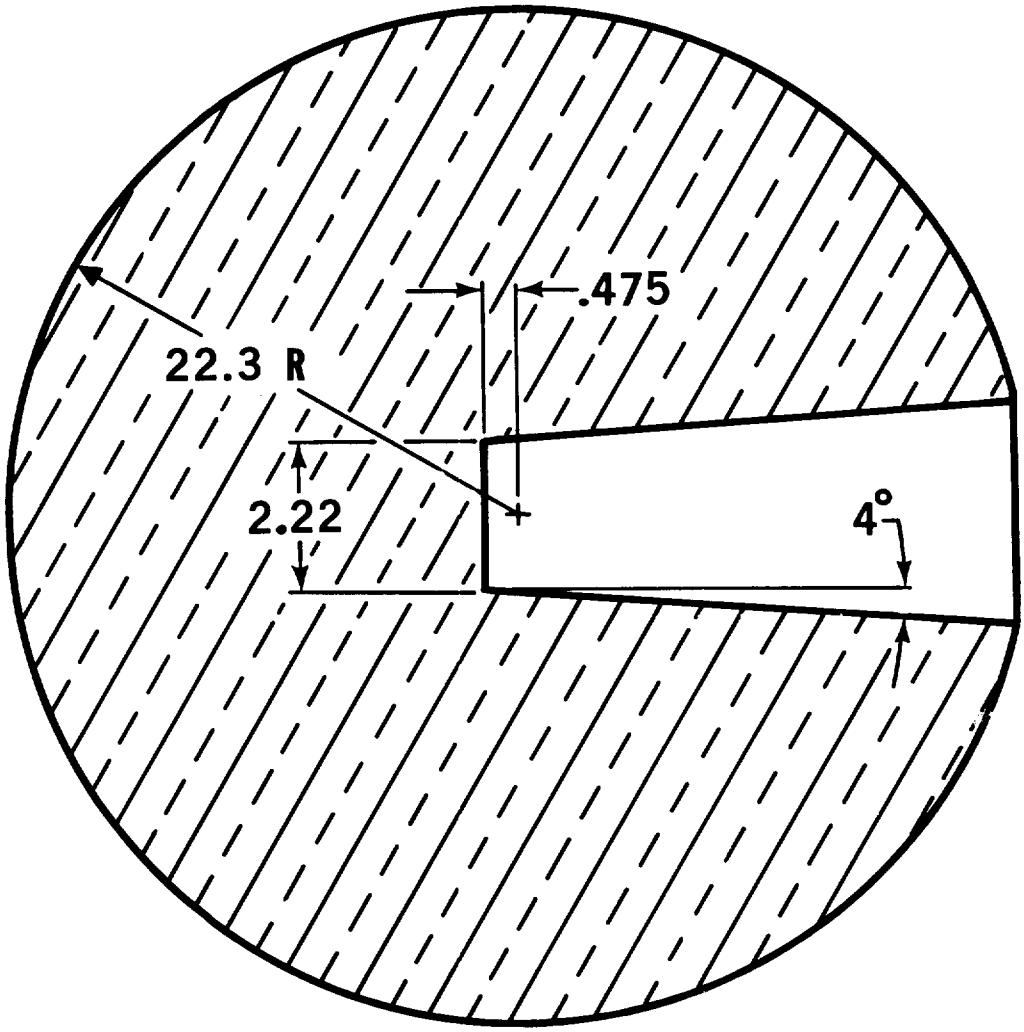

All Dimensions in Centimeters

Fe > 97.0%

C < 1.2%

Mn < 1.0%

P < 0.7%

S < 0.1%

$\rho = 7.85\ g/cm^3$

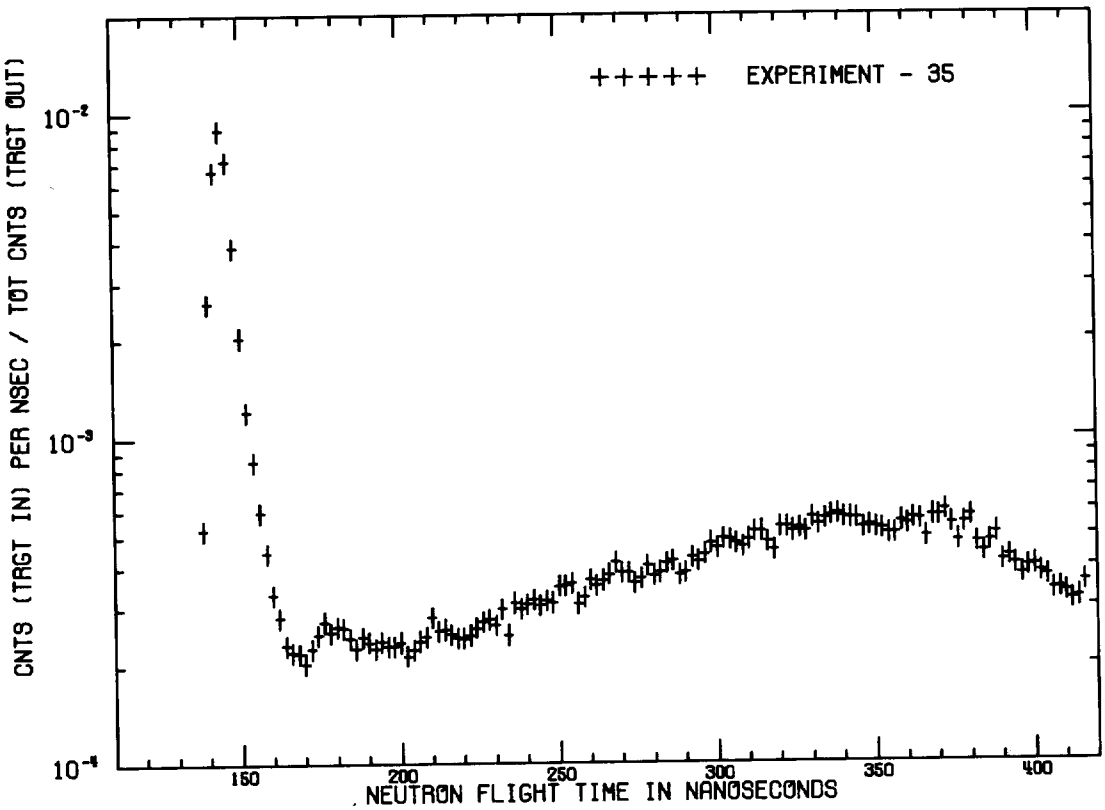

IRON - 4.8 M.F.P. - 30 DEG.

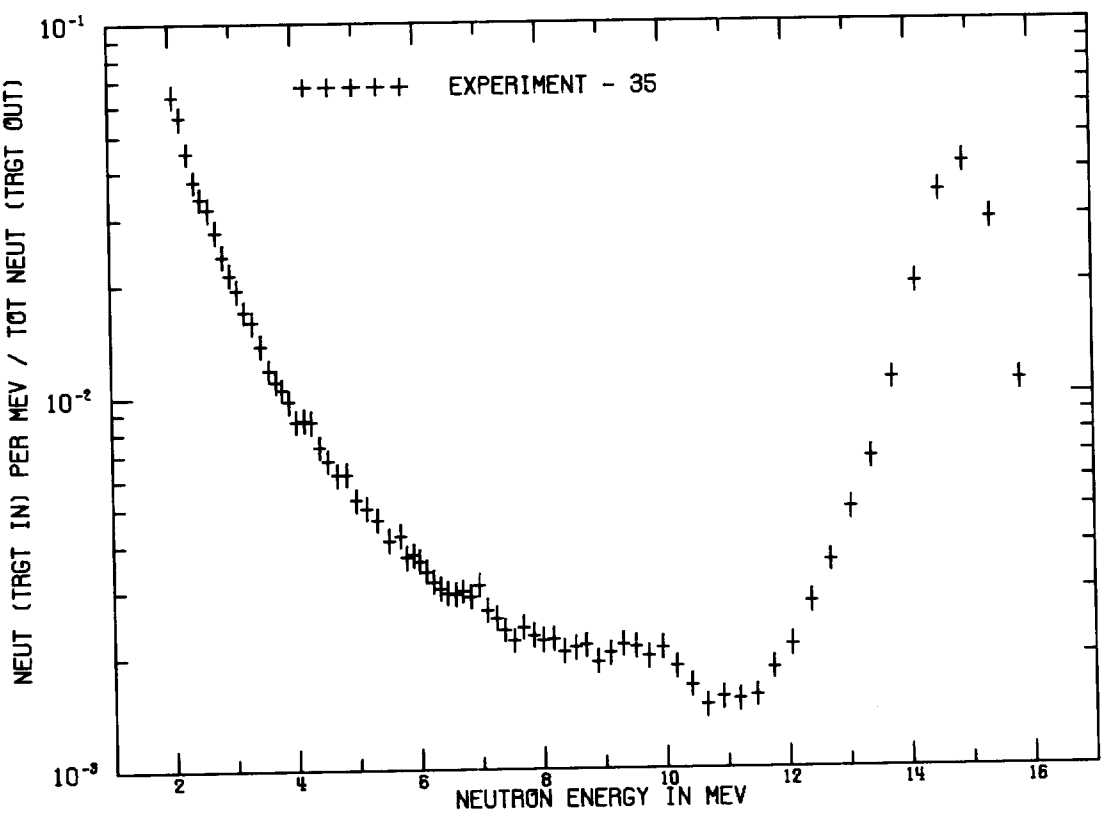

IRON - 4.8 M.F.P. - 30 DEG.

IRON - 4.8 M.F.P. - 30 DEG.
FLIGHTPATH = 766.00 CM DETECTOR = NE213 FWHM = 3 NS

TIME(NS)	CALCULATED ENERGY(MEV)	CNT/NS/SOURCE	ERROR	INTEGRAL
1.3700E+02	1.6777E+01	3.42060E-05	5.27300E-06	6.84120E-05
1.3900E+02	1.6285E+01	5.25350E-04	1.98660E-05	1.11911E-03
1.4100E+02	1.5815E+01	2.59545E-03	4.40560E-05	6.31001E-03
1.4300E+02	1.5365E+01	6.65450E-03	7.05200E-05	1.96190E-02
1.4500E+02	1.4934E+01	8.93900E-03	8.17250E-05	3.74970E-02
1.4700E+02	1.4521E+01	7.13500E-03	7.30200E-05	5.17670E-02
1.4900E+02	1.4125E+01	3.87580E-03	5.38250E-05	5.95186E-02
1.5100E+02	1.3745E+01	2.04105E-03	3.90750E-05	6.36007E-02
1.5300E+02	1.3380E+01	1.20365E-03	3.00220E-05	6.60080E-02
1.5500E+02	1.3030E+01	8.46350E-04	2.51885E-05	6.77007E-02
1.5700E+02	1.2693E+01	5.91400E-04	2.10715E-05	6.88835E-02
1.5900E+02	1.2370E+01	4.45635E-04	1.83065E-05	6.97748E-02
1.6100E+02	1.2058E+01	3.32550E-04	1.58320E-05	7.04399E-02
1.6300E+02	1.1759E+01	2.81220E-04	1.45710E-05	7.10023E-02
1.6500E+02	1.1470E+01	2.31085E-04	1.32235E-05	7.14645E-02
1.6700E+02	1.1192E+01	2.20560E-04	1.29230E-05	7.19056E-02
1.6900E+02	1.0924E+01	2.19055E-04	1.28795E-05	7.23437E-02
1.7100E+02	1.0666E+01	2.04125E-04	1.24390E-05	7.27520E-02
1.7300E+02	1.0417E+01	2.26530E-04	1.30945E-05	7.32050E-02
1.7500E+02	1.0176E+01	2.49125E-04	1.37240E-05	7.37033E-02
1.7700E+02	9.9438E+00	2.73780E-04	1.43790E-05	7.42508E-02
1.7900E+02	9.7194E+00	2.54065E-04	1.38575E-05	7.47590E-02
1.8100E+02	9.5025E+00	2.64390E-04	1.41330E-05	7.52878E-02
1.8300E+02	9.2929E+00	2.61635E-04	1.40600E-05	7.58110E-02
1.8500E+02	9.0901E+00	2.42850E-04	1.35520E-05	7.62967E-02
1.8700E+02	8.8939E+00	2.26260E-04	1.30865E-05	7.67492E-02
1.8900E+02	8.7041E+00	2.45080E-04	1.36130E-05	7.72394E-02
1.9100E+02	8.5203E+00	2.36630E-04	1.33795E-05	7.77127E-02
1.9300E+02	8.3423E+00	2.25580E-04	1.30675E-05	7.81638E-02
1.9500E+02	8.1698E+00	2.37230E-04	1.33960E-05	7.86383E-02
1.9700E+02	8.0026E+00	2.29440E-04	1.31770E-05	7.90972E-02
1.9900E+02	7.8406E+00	2.30280E-04	1.32010E-05	7.95577E-02
2.0100E+02	7.6834E+00	2.36180E-04	1.33670E-05	8.00301E-02
2.0300E+02	7.5310E+00	2.14600E-04	1.27495E-05	8.04593E-02
2.0500E+02	7.3830E+00	2.23835E-04	1.30175E-05	8.09070E-02
2.0700E+02	7.2394E+00	2.38245E-04	1.34245E-05	8.13834E-02
2.0900E+02	7.0999E+00	2.45915E-04	1.36360E-05	8.18753E-02
2.1100E+02	6.9645E+00	2.81845E-04	1.45870E-05	8.24390E-02
2.1300E+02	6.8329E+00	2.55925E-04	1.39075E-05	8.29508E-02
2.1500E+02	6.7050E+00	2.58585E-04	1.39790E-05	8.34680E-02
2.1700E+02	6.5807E+00	2.48670E-04	1.37115E-05	8.39653E-02
2.1900E+02	6.4598E+00	2.43410E-04	1.35675E-05	8.44521E-02
2.2100E+02	6.3422E+00	2.42450E-04	1.35410E-05	8.49370E-02
2.2300E+02	6.2278E+00	2.48210E-04	1.36990E-05	8.54335E-02
2.2500E+02	6.1165E+00	2.60975E-04	1.40425E-05	8.59554E-02

2.2700E+02	6.0082E+00	2.71965E-04	1.43320E-05	8.64993E-02
2.2900E+02	5.9027E+00	2.76750E-04	1.44560E-05	8.70528E-02
2.3100E+02	5.8000E+00	2.66465E-04	1.41875E-05	8.75858E-02
2.3300E+02	5.6999E+00	2.97610E-04	1.49850E-05	8.81810E-02
2.3500E+02	5.6025E+00	2.48090E-04	1.36955E-05	8.86772E-02
2.3700E+02	5.5075E+00	3.11975E-04	1.53390E-05	8.93011E-02
2.3900E+02	5.4149E+00	2.98785E-04	1.50145E-05	8.98987E-02
2.4100E+02	5.3246E+00	3.08795E-04	1.52615E-05	9.05163E-02
2.4300E+02	5.2366E+00	3.17910E-04	1.54830E-05	9.11521E-02
2.4500E+02	5.1508E+00	3.05655E-04	1.51845E-05	9.17634E-02
2.4700E+02	5.0670E+00	3.15325E-04	1.54205E-05	9.23941E-02
2.4900E+02	4.9853E+00	3.11925E-04	1.53380E-05	9.30179E-02
2.5100E+02	4.9056E+00	3.50250E-04	1.62445E-05	9.37184E-02
2.5300E+02	4.8277E+00	3.52370E-04	1.62930E-05	9.44232E-02
2.5500E+02	4.7517E+00	3.56630E-04	1.63905E-05	9.51364E-02
2.5700E+02	4.6775E+00	3.09475E-04	1.52780E-05	9.57554E-02
2.5900E+02	4.6050E+00	3.24490E-04	1.56410E-05	9.64043E-02
2.6100E+02	4.5342E+00	3.66085E-04	1.66045E-05	9.71365E-02
2.6300E+02	4.4650E+00	3.51325E-04	1.62690E-05	9.78392E-02
2.6500E+02	4.3974E+00	3.64075E-04	1.65590E-05	9.85673E-02
2.6700E+02	4.3313E+00	3.79890E-04	1.69120E-05	9.93271E-02
2.6900E+02	4.2667E+00	4.13590E-04	1.76405E-05	1.00154E-01
2.7100E+02	4.2035E+00	3.83295E-04	1.69870E-05	1.00921E-01
2.7300E+02	4.1417E+00	3.84710E-04	1.70180E-05	1.01690E-01
2.7500E+02	4.0813E+00	3.57715E-04	1.64150E-05	1.02406E-01
2.7700E+02	4.0222E+00	3.68400E-04	1.66565E-05	1.03143E-01
2.7900E+02	3.9644E+00	4.04545E-04	1.74480E-05	1.03952E-01
2.8100E+02	3.9078E+00	3.77020E-04	1.68485E-05	1.04706E-01
2.8300E+02	3.8524E+00	3.85770E-04	1.70415E-05	1.05477E-01
2.8500E+02	3.7982E+00	4.10995E-04	1.75855E-05	1.06299E-01
2.8700E+02	3.7452E+00	4.18005E-04	1.77340E-05	1.07135E-01
2.8900E+02	3.6932E+00	3.78920E-04	1.68905E-05	1.07893E-01
2.9100E+02	3.6423E+00	3.85100E-04	1.70265E-05	1.08663E-01
2.9300E+02	3.5925E+00	4.26230E-04	1.79060E-05	1.09516E-01
2.9500E+02	3.5437E+00	4.15490E-04	1.76810E-05	1.10347E-01
2.9700E+02	3.4958E+00	4.36565E-04	1.81205E-05	1.11220E-01
2.9900E+02	3.4490E+00	4.73215E-04	1.88610E-05	1.12166E-01
3.0100E+02	3.4030E+00	4.55025E-04	1.84970E-05	1.13076E-01
3.0300E+02	3.3580E+00	4.87060E-04	1.91330E-05	1.14050E-01
3.0500E+02	3.3139E+00	4.84520E-04	1.90835E-05	1.15019E-01
3.0700E+02	3.2706E+00	4.72605E-04	1.88485E-05	1.15965E-01
3.0900E+02	3.2282E+00	4.59400E-04	1.85850E-05	1.16883E-01
3.1100E+02	3.1866E+00	4.85135E-04	1.90955E-05	1.17854E-01
3.1300E+02	3.1458E+00	5.10750E-04	1.95895E-05	1.18875E-01
3.1500E+02	3.1058E+00	5.13600E-04	1.96445E-05	1.19902E-01
3.1700E+02	3.0665E+00	4.76500E-04	1.89255E-05	1.20855E-01
3.1900E+02	3.0280E+00	4.50005E-04	1.83955E-05	1.21755E-01
3.2100E+02	2.9902E+00	5.28400E-04	1.99230E-05	1.22812E-01

3.2300E+02	2.9531E+00	5.28300E-04	1.99215E-05	1.23869E-01
3.2500E+02	2.9167E+00	5.13250E-04	1.96375E-05	1.24895E-01
3.2700E+02	2.8810E+00	5.23500E-04	1.98315E-05	1.25942E-01
3.2900E+02	2.8459E+00	5.11350E-04	1.96015E-05	1.26965E-01
3.3100E+02	2.8115E+00	5.65700E-04	2.06110E-05	1.28096E-01
3.3300E+02	2.7777E+00	5.35750E-04	2.00610E-05	1.29168E-01
3.3500E+02	2.7444E+00	5.60050E-04	2.05085E-05	1.30288E-01
3.3700E+02	2.7118E+00	5.71800E-04	2.07215E-05	1.31432E-01
3.3900E+02	2.6798E+00	5.79350E-04	2.08570E-05	1.32590E-01
3.4100E+02	2.6483E+00	5.62700E-04	2.05565E-05	1.33716E-01
3.4300E+02	2.6174E+00	5.61850E-04	2.05415E-05	1.34839E-01
3.4500E+02	2.5870E+00	5.59600E-04	2.05005E-05	1.35959E-01
3.4700E+02	2.5571E+00	5.22950E-04	1.98210E-05	1.37005E-01
3.4900E+02	2.5278E+00	5.33400E-04	2.00170E-05	1.38071E-01
3.5100E+02	2.4990E+00	5.24950E-04	1.98590E-05	1.39121E-01
3.5300E+02	2.4706E+00	5.21150E-04	1.97870E-05	1.40164E-01
3.5500E+02	2.4427E+00	5.02600E-04	1.94345E-05	1.41169E-01
3.5700E+02	2.4153E+00	5.02700E-04	1.94360E-05	1.42174E-01
3.5900E+02	2.3884E+00	5.48400E-04	2.02950E-05	1.43271E-01
3.6100E+02	2.3619E+00	5.37000E-04	2.00840E-05	1.44345E-01
3.6300E+02	2.3359E+00	5.60350E-04	2.05135E-05	1.45466E-01
3.6500E+02	2.3102E+00	5.54350E-04	2.04045E-05	1.46574E-01
3.6700E+02	2.2850E+00	4.91795E-04	1.92250E-05	1.47558E-01
3.6900E+02	2.2602E+00	5.70750E-04	2.07025E-05	1.48699E-01
3.7100E+02	2.2359E+00	5.69250E-04	2.06750E-05	1.49838E-01
3.7300E+02	2.2119E+00	5.91950E-04	2.10810E-05	1.51022E-01
3.7500E+02	2.1882E+00	5.40000E-04	2.01400E-05	1.52102E-01
3.7700E+02	2.1650E+00	4.77790E-04	1.89510E-05	1.53057E-01
3.7900E+02	2.1421E+00	5.43100E-04	2.01970E-05	1.54144E-01
3.8100E+02	2.1196E+00	5.69450E-04	2.06790E-05	1.55282E-01
3.8300E+02	2.0975E+00	4.72760E-04	1.88515E-05	1.56228E-01
3.8500E+02	2.0757E+00	4.40980E-04	1.82110E-05	1.57110E-01
3.8700E+02	2.0542E+00	4.76345E-04	1.89225E-05	1.58063E-01
3.8900E+02	2.0331E+00	5.04850E-04	1.94770E-05	1.59072E-01
3.9100E+02	2.0123E+00	4.14195E-04	1.76535E-05	1.59901E-01
3.9300E+02	1.9918E+00	4.26725E-04	1.79165E-05	1.60754E-01
3.9500E+02	1.9716E+00	4.02970E-04	1.74145E-05	1.61560E-01
3.9700E+02	1.9517E+00	3.76895E-04	1.68460E-05	1.62314E-01
3.9900E+02	1.9321E+00	3.98060E-04	1.73085E-05	1.63110E-01
4.0100E+02	1.9128E+00	4.01600E-04	1.73850E-05	1.63913E-01
4.0300E+02	1.8938E+00	3.82335E-04	1.69660E-05	1.64678E-01
4.0500E+02	1.8751E+00	3.71675E-04	1.67295E-05	1.65421E-01
4.0700E+02	1.8567E+00	3.38045E-04	1.59610E-05	1.66097E-01
4.0900E+02	1.8385E+00	3.40045E-04	1.60080E-05	1.66777E-01
4.1100E+02	1.8206E+00	3.31295E-04	1.58025E-05	1.67440E-01
4.1300E+02	1.8030E+00	3.14170E-04	1.53925E-05	1.68068E-01
4.1500E+02	1.7856E+00	3.19715E-04	1.55265E-05	1.68708E-01
4.1700E+02	1.7685E+00	3.56495E-04	1.63870E-05	1.69421E-01

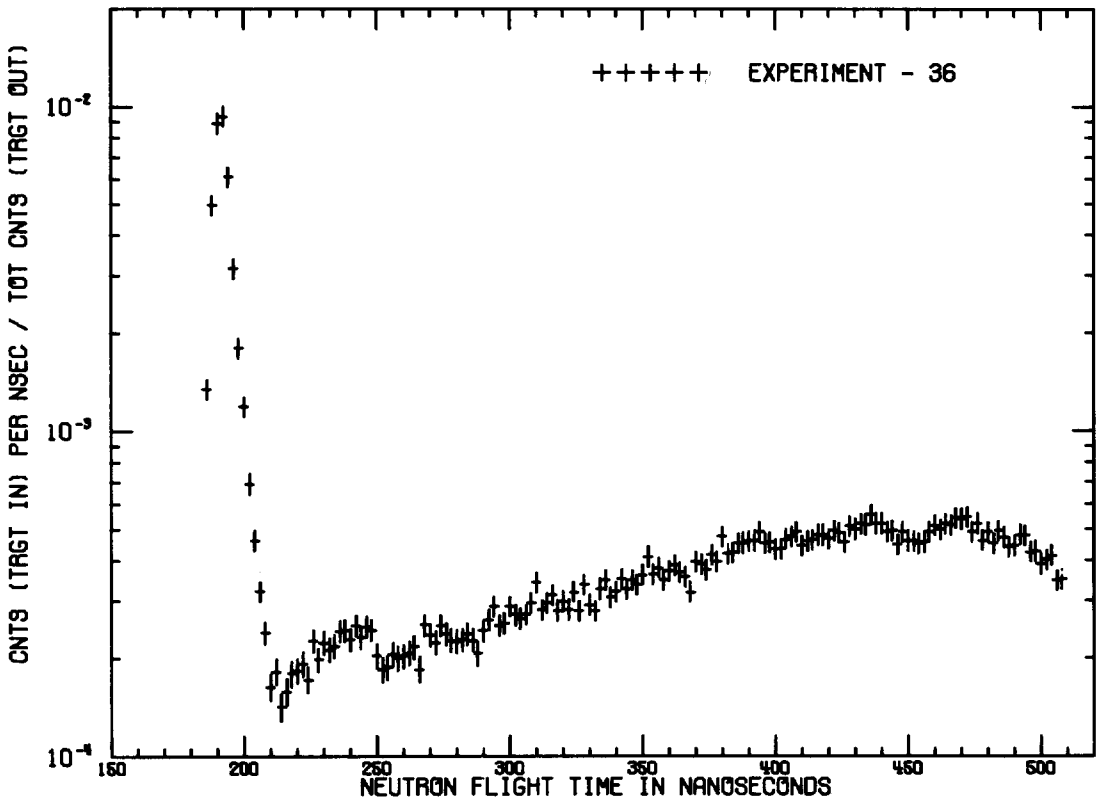

IRON - 4.8 M.F.P. - 120 DEG.

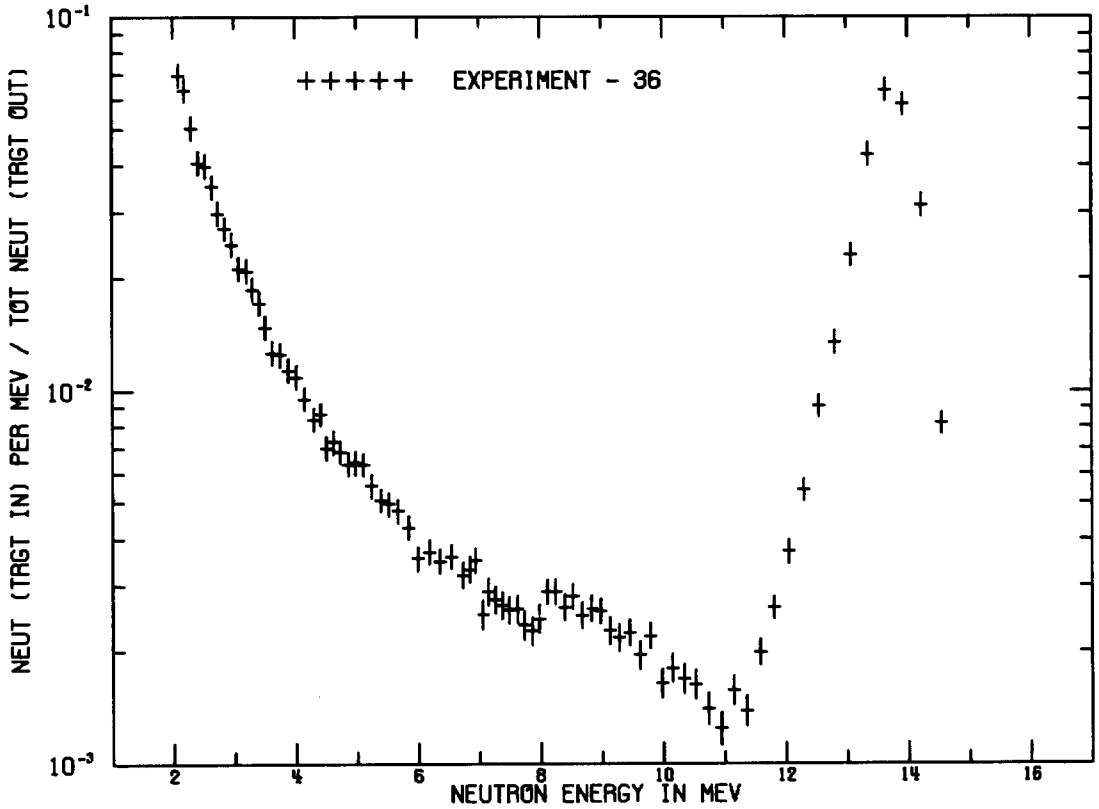

IRON - 4.8 M.F.P. - 120 DEG.

IRON - 4.8 M.F.P. - 120 DEG.
FLIGHTPATH = 975.20 CM DETECTOR = NE213 FWHM = 3 NS

TIME(NS)	CALCULATED ENERGY(MEV)	CNT/NS/SOURCE	ERROR	INTEGRAL
1.8500E+02	1.4868E+01	2.30590E-04	1.78505E-05	4.61180E-04
1.8700E+02	1.4544E+01	1.34395E-03	4.26800E-05	3.14908E-03
1.8900E+02	1.4231E+01	4.96230E-03	8.18900E-05	1.30737E-02
1.9100E+02	1.3928E+01	8.87750E-03	1.09505E-04	3.08287E-02
1.9300E+02	1.3634E+01	9.32500E-03	1.12230E-04	4.94787E-02
1.9500E+02	1.3350E+01	6.06050E-03	9.04900E-05	6.15997E-02
1.9700E+02	1.3075E+01	3.16440E-03	6.54150E-05	6.79285E-02
1.9900E+02	1.2808E+01	1.80235E-03	4.94005E-05	7.15332E-02
2.0100E+02	1.2549E+01	1.18525E-03	4.00915E-05	7.39037E-02
2.0300E+02	1.2298E+01	6.88550E-04	3.06085E-05	7.52808E-02
2.0500E+02	1.2055E+01	4.61810E-04	2.51150E-05	7.62044E-02
2.0700E+02	1.1819E+01	3.20455E-04	2.09750E-05	7.68453E-02
2.0900E+02	1.1589E+01	2.39080E-04	1.81685E-05	7.73235E-02
2.1100E+02	1.1367E+01	1.63460E-04	1.51005E-05	7.76504E-02
2.1300E+02	1.1150E+01	1.82050E-04	1.59095E-05	7.80145E-02
2.1500E+02	1.0940E+01	1.41600E-04	1.40895E-05	7.82977E-02
2.1700E+02	1.0736E+01	1.57630E-04	1.48375E-05	7.86129E-02
2.1900E+02	1.0538E+01	1.79555E-04	1.58035E-05	7.89721E-02
2.2100E+02	1.0345E+01	1.82755E-04	1.59395E-05	7.93376E-02
2.2300E+02	1.0157E+01	1.92385E-04	1.63420E-05	7.97223E-02
2.2500E+02	9.9743E+00	1.71665E-04	1.54625E-05	8.00657E-02
2.2700E+02	9.7966E+00	2.26105E-04	1.76800E-05	8.05179E-02
2.2900E+02	9.6236E+00	1.97775E-04	1.65630E-05	8.09134E-02
2.3100E+02	9.4551E+00	2.23020E-04	1.75620E-05	8.13595E-02
2.3300E+02	9.2911E+00	2.12700E-04	1.71610E-05	8.17849E-02
2.3500E+02	9.1313E+00	2.17825E-04	1.73610E-05	8.22205E-02
2.3700E+02	8.9757E+00	2.42300E-04	1.82880E-05	8.27051E-02
2.3900E+02	8.8240E+00	2.42810E-04	1.83065E-05	8.31907E-02
2.4100E+02	8.6761E+00	2.28235E-04	1.77615E-05	8.36472E-02
2.4300E+02	8.5319E+00	2.52455E-04	1.86590E-05	8.41521E-02
2.4500E+02	8.3913E+00	2.31815E-04	1.78970E-05	8.46157E-02
2.4700E+02	8.2542E+00	2.50185E-04	1.85765E-05	8.51161E-02
2.4900E+02	8.1204E+00	2.44360E-04	1.83640E-05	8.56048E-02
2.5100E+02	7.9899E+00	2.03135E-04	1.67805E-05	8.60111E-02
2.5300E+02	7.8625E+00	1.84880E-04	1.60290E-05	8.63809E-02
2.5500E+02	7.7381E+00	1.87815E-04	1.61525E-05	8.67565E-02
2.5700E+02	7.6167E+00	2.05905E-04	1.68915E-05	8.71683E-02
2.5900E+02	7.4981E+00	2.00305E-04	1.66660E-05	8.75689E-02
2.6100E+02	7.3822E+00	2.03035E-04	1.67760E-05	8.79750E-02
2.6300E+02	7.2691E+00	2.07615E-04	1.69595E-05	8.83902E-02
2.6500E+02	7.1585E+00	2.16360E-04	1.73040E-05	8.88229E-02
2.6700E+02	7.0505E+00	1.84980E-04	1.60335E-05	8.91929E-02
2.6900E+02	6.9449E+00	2.52905E-04	1.86755E-05	8.96987E-02
2.7100E+02	6.8416E+00	2.35625E-04	1.80400E-05	9.01700E-02
2.7300E+02	6.7407E+00	2.23305E-04	1.75730E-05	9.06166E-02

2.7500E+02	6.6419E+00	2.52095E-04	1.86460E-05	9.11208E-02
2.7700E+02	6.5454E+00	2.37255E-04	1.81005E-05	9.15953E-02
2.7900E+02	6.4509E+00	2.27025E-04	1.77150E-05	9.20493E-02
2.8100E+02	6.3585E+00	2.25180E-04	1.76445E-05	9.24997E-02
2.8300E+02	6.2680E+00	2.28310E-04	1.77640E-05	9.29563E-02
2.8500E+02	6.1795E+00	2.36985E-04	1.80910E-05	9.34303E-02
2.8700E+02	6.0928E+00	2.27185E-04	1.77215E-05	9.38846E-02
2.8900E+02	6.0080E+00	2.06680E-04	1.69220E-05	9.42980E-02
2.9100E+02	5.9249E+00	2.43570E-04	1.83345E-05	9.47851E-02
2.9300E+02	5.8435E+00	2.63080E-04	1.90395E-05	9.53113E-02
2.9500E+02	5.7638E+00	2.88855E-04	1.99320E-05	9.58890E-02
2.9700E+02	5.6858E+00	2.52375E-04	1.86560E-05	9.63938E-02
2.9900E+02	5.6093E+00	2.55750E-04	1.87775E-05	9.69053E-02
3.0100E+02	5.5343E+00	2.88610E-04	1.99240E-05	9.74825E-02
3.0300E+02	5.4609E+00	2.71975E-04	1.93525E-05	9.80264E-02
3.0500E+02	5.3889E+00	2.64385E-04	1.90855E-05	9.85552E-02
3.0700E+02	5.3183E+00	2.72320E-04	1.93640E-05	9.90998E-02
3.0900E+02	5.2491E+00	2.95640E-04	2.01605E-05	9.96911E-02
3.1100E+02	5.1812E+00	3.41875E-04	2.16535E-05	1.00375E-01
3.1300E+02	5.1147E+00	2.81150E-04	1.96695E-05	1.00937E-01
3.1500E+02	5.0494E+00	2.95815E-04	2.01665E-05	1.01529E-01
3.1700E+02	4.9854E+00	3.12410E-04	2.07145E-05	1.02154E-01
3.1900E+02	4.9226E+00	2.80270E-04	1.96395E-05	1.02714E-01
3.2100E+02	4.8610E+00	2.99580E-04	2.02920E-05	1.03313E-01
3.2300E+02	4.8005E+00	2.82620E-04	1.97200E-05	1.03879E-01
3.2500E+02	4.7412E+00	3.20030E-04	2.09615E-05	1.04519E-01
3.2700E+02	4.6829E+00	2.80165E-04	1.96355E-05	1.05079E-01
3.2900E+02	4.6257E+00	3.37425E-04	2.15140E-05	1.05754E-01
3.3100E+02	4.5696E+00	2.92075E-04	2.00410E-05	1.06338E-01
3.3300E+02	4.5145E+00	2.78975E-04	1.95950E-05	1.06896E-01
3.3500E+02	4.4603E+00	3.27410E-04	2.11975E-05	1.07551E-01
3.3700E+02	4.4072E+00	3.49170E-04	2.18795E-05	1.08249E-01
3.3900E+02	4.3550E+00	3.08065E-04	2.05725E-05	1.08865E-01
3.4100E+02	4.3037E+00	3.21975E-04	2.10240E-05	1.09509E-01
3.4300E+02	4.2533E+00	3.52240E-04	2.19740E-05	1.10214E-01
3.4500E+02	4.2038E+00	3.26060E-04	2.11545E-05	1.10866E-01
3.4700E+02	4.1552E+00	3.48635E-04	2.18630E-05	1.11563E-01
3.4900E+02	4.1074E+00	3.37110E-04	2.15040E-05	1.12237E-01
3.5100E+02	4.0604E+00	3.61585E-04	2.22595E-05	1.12960E-01
3.5300E+02	4.0142E+00	4.11695E-04	2.37300E-05	1.13784E-01
3.5500E+02	3.9688E+00	3.63030E-04	2.23030E-05	1.14510E-01
3.5700E+02	3.9242E+00	3.79705E-04	2.28020E-05	1.15269E-01
3.5900E+02	3.8803E+00	3.48855E-04	2.18700E-05	1.15967E-01
3.6100E+02	3.8372E+00	3.71110E-04	2.25465E-05	1.16709E-01
3.6300E+02	3.7948E+00	3.86360E-04	2.29985E-05	1.17482E-01
3.6500E+02	3.7531E+00	3.69125E-04	2.24865E-05	1.18220E-01
3.6700E+02	3.7120E+00	3.56030E-04	2.20900E-05	1.18932E-01
3.6900E+02	3.6717E+00	3.20025E-04	2.09610E-05	1.19572E-01

3.7100E+02	3.6319E+00	3.97435E-04	2.33210E-05	1.20367E-01
3.7300E+02	3.5929E+00	3.91350E-04	2.31440E-05	1.21150E-01
3.7500E+02	3.5544E+00	3.74880E-04	2.26585E-05	1.21900E-01
3.7700E+02	3.5166E+00	4.17085E-04	2.38830E-05	1.22734E-01
3.7900E+02	3.4794E+00	3.97755E-04	2.33300E-05	1.23529E-01
3.8100E+02	3.4428E+00	4.75755E-04	2.54870E-05	1.24481E-01
3.8300E+02	3.4067E+00	4.21350E-04	2.40030E-05	1.25323E-01
3.8500E+02	3.3712E+00	4.23295E-04	2.40580E-05	1.26170E-01
3.8700E+02	3.3363E+00	4.51675E-04	2.48410E-05	1.27073E-01
3.8900E+02	3.3019E+00	4.54365E-04	2.49140E-05	1.27982E-01
3.9100E+02	3.2680E+00	4.60580E-04	2.50820E-05	1.28903E-01
3.9300E+02	3.2346E+00	4.61725E-04	2.51130E-05	1.29827E-01
3.9500E+02	3.2018E+00	4.89750E-04	2.58550E-05	1.30806E-01
3.9700E+02	3.1695E+00	4.51385E-04	2.48335E-05	1.31709E-01
3.9900E+02	3.1376E+00	4.55945E-04	2.49570E-05	1.32621E-01
4.0100E+02	3.1062E+00	4.34155E-04	2.43605E-05	1.33489E-01
4.0300E+02	3.0753E+00	4.35305E-04	2.43925E-05	1.34360E-01
4.0500E+02	3.0449E+00	4.65815E-04	2.52225E-05	1.35291E-01
4.0700E+02	3.0149E+00	4.74110E-04	2.54435E-05	1.36240E-01
4.0900E+02	2.9853E+00	4.91325E-04	2.58960E-05	1.37222E-01
4.1100E+02	2.9562E+00	4.45675E-04	2.46775E-05	1.38114E-01
4.1300E+02	2.9275E+00	4.61210E-04	2.50990E-05	1.39036E-01
4.1500E+02	2.8992E+00	4.62615E-04	2.51370E-05	1.39961E-01
4.1700E+02	2.8714E+00	4.80550E-04	2.56140E-05	1.40922E-01
4.1900E+02	2.8439E+00	4.80520E-04	2.56130E-05	1.41883E-01
4.2100E+02	2.8168E+00	4.67020E-04	2.52550E-05	1.42818E-01
4.2300E+02	2.7901E+00	4.94600E-04	2.59815E-05	1.43807E-01
4.2500E+02	2.7638E+00	4.86730E-04	2.57760E-05	1.44780E-01
4.2700E+02	2.7379E+00	4.57025E-04	2.49860E-05	1.45694E-01
4.2900E+02	2.7123E+00	5.10000E-04	2.63780E-05	1.46714E-01
4.3100E+02	2.6871E+00	5.00750E-04	2.61405E-05	1.47716E-01
4.3300E+02	2.6622E+00	5.19050E-04	2.66085E-05	1.48754E-01
4.3500E+02	2.6377E+00	5.17600E-04	2.65725E-05	1.49789E-01
4.3700E+02	2.6135E+00	5.55100E-04	2.75085E-05	1.50899E-01
4.3900E+02	2.5896E+00	5.21500E-04	2.66710E-05	1.51942E-01
4.4100E+02	2.5661E+00	5.21450E-04	2.66695E-05	1.52985E-01
4.4300E+02	2.5429E+00	4.91005E-04	2.58380E-05	1.53967E-01
4.4500E+02	2.5200E+00	4.96070E-04	2.60195E-05	1.54959E-01
4.4700E+02	2.4974E+00	4.49780E-04	2.47895E-05	1.55859E-01
4.4900E+02	2.4751E+00	4.89805E-04	2.58565E-05	1.56838E-01
4.5100E+02	2.4531E+00	4.61675E-04	2.51115E-05	1.57762E-01
4.5300E+02	2.4314E+00	4.60355E-04	2.50760E-05	1.58683E-01
4.5500E+02	2.4100E+00	4.53295E-04	2.48850E-05	1.59589E-01
4.5700E+02	2.3889E+00	4.57975E-04	2.50120E-05	1.60505E-01
4.5900E+02	2.3680E+00	4.91320E-04	2.58960E-05	1.61488E-01
4.6100E+02	2.3475E+00	5.13650E-04	2.64720E-05	1.62515E-01
4.6300E+02	2.3271E+00	4.99290E-04	2.61030E-05	1.63514E-01
4.6500E+02	2.3071E+00	5.20000E-04	2.66335E-05	1.64554E-01

4.6700E+02	2.2873E+00	5.14400E-04	2.64905E-05	1.65582E-01
4.6900E+02	2.2678E+00	5.40750E-04	2.71540E-05	1.66664E-01
4.7100E+02	2.2485E+00	5.39350E-04	2.71195E-05	1.67743E-01
4.7300E+02	2.2294E+00	5.46600E-04	2.72985E-05	1.68836E-01
4.7500E+02	2.2106E+00	4.90675E-04	2.58790E-05	1.69817E-01
4.7700E+02	2.1921E+00	5.21400E-04	2.66680E-05	1.70860E-01
4.7900E+02	2.1737E+00	4.61900E-04	2.51175E-05	1.71784E-01
4.8100E+02	2.1556E+00	4.90560E-04	2.58760E-05	1.72765E-01
4.8300E+02	2.1378E+00	4.51210E-04	2.48285E-05	1.73667E-01
4.8500E+02	2.1201E+00	4.96240E-04	2.60240E-05	1.74660E-01
4.8700E+02	2.1027E+00	4.72760E-04	2.54075E-05	1.75605E-01
4.8900E+02	2.0855E+00	4.40645E-04	2.45395E-05	1.76487E-01
4.9100E+02	2.0684E+00	4.45960E-04	2.46855E-05	1.77378E-01
4.9300E+02	2.0516E+00	4.81240E-04	2.56320E-05	1.78341E-01
4.9500E+02	2.0350E+00	4.80145E-04	2.56030E-05	1.79301E-01
4.9700E+02	2.0186E+00	4.25990E-04	2.41335E-05	1.80153E-01
4.9900E+02	2.0024E+00	4.28750E-04	2.42105E-05	1.81011E-01
5.0100E+02	1.9864E+00	3.91760E-04	2.31560E-05	1.81794E-01
5.0300E+02	1.9706E+00	4.03860E-04	2.35060E-05	1.82602E-01
5.0500E+02	1.9550E+00	4.15645E-04	2.38420E-05	1.83433E-01
5.0700E+02	1.9396E+00	3.47750E-04	2.18355E-05	1.84129E-01
5.0900E+02	1.9243E+00	3.52270E-04	2.19750E-05	1.84833E-01

Lead 1.4 m. f. p.

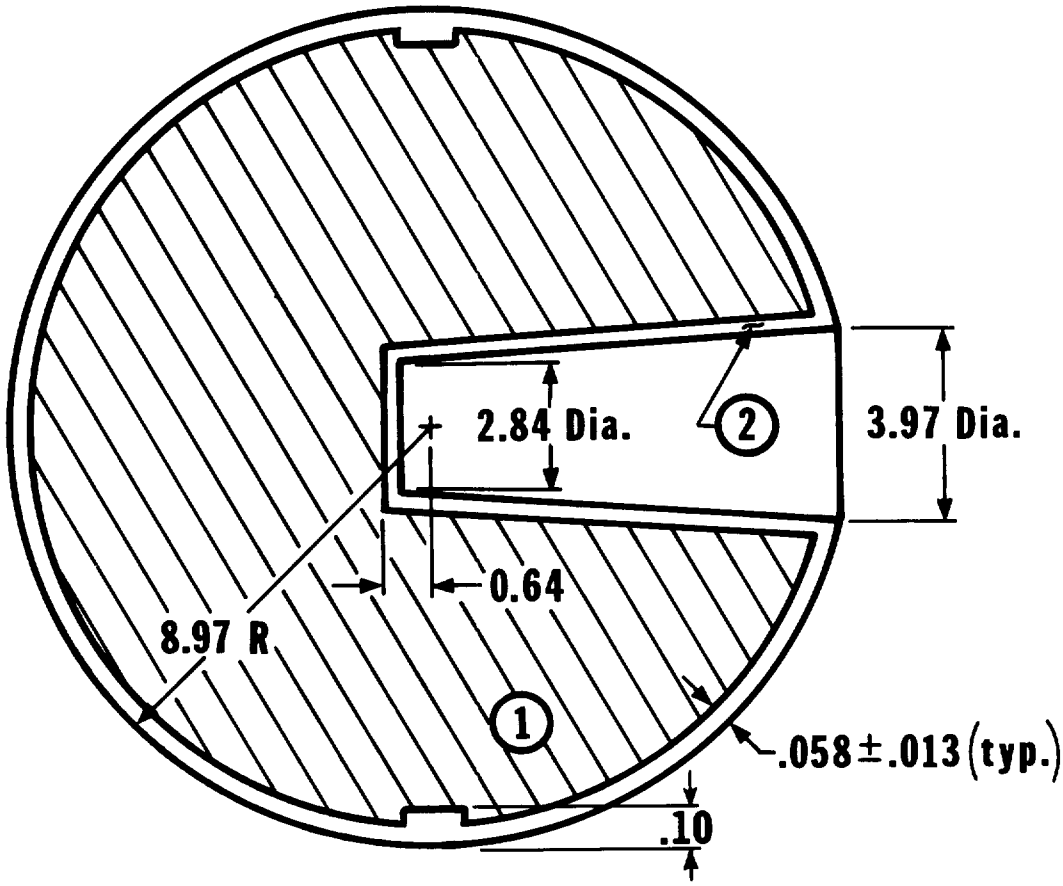

All Dimensions in Centimeters

ZONE	DENSITY (g/cm^3)	MATERIAL	ATOMIC %
1	11.35	Pb	100.0
2	7.90	Fe	68.6
		Cr	20.0
		Ni	8.4
		Si	2.0
		Mn	1.0

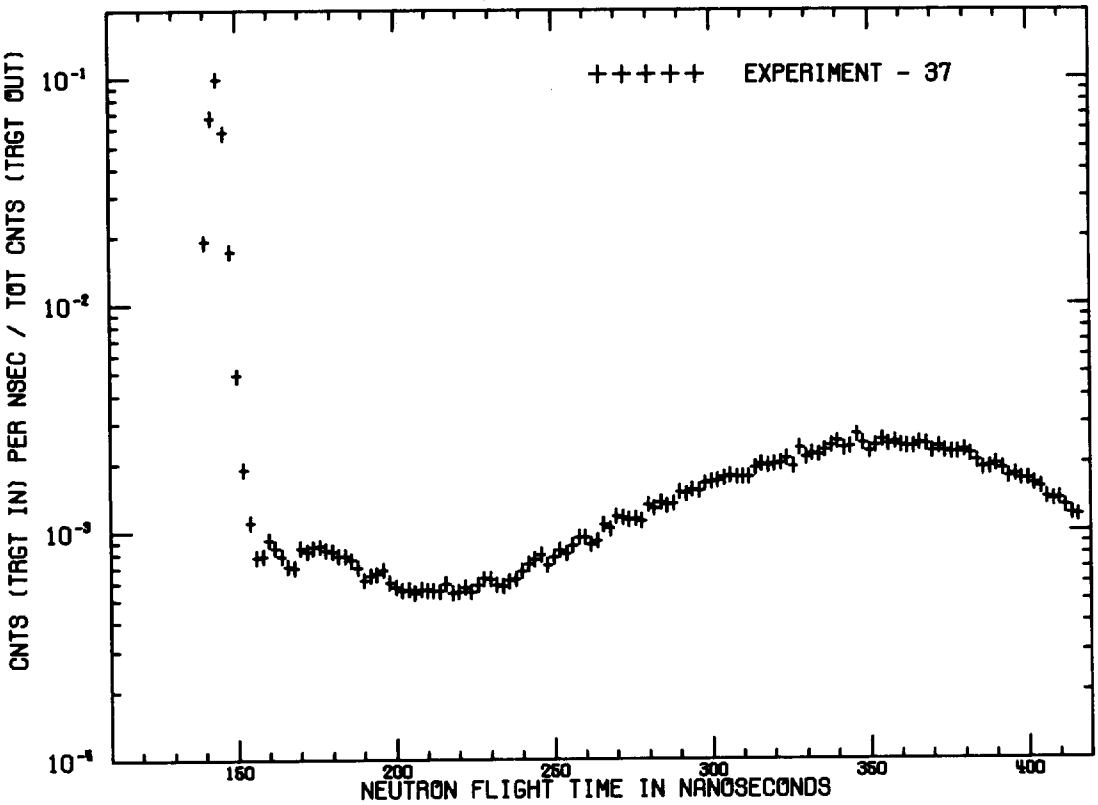

LEAD - 1.4 M.F.P. - 30 DEG.

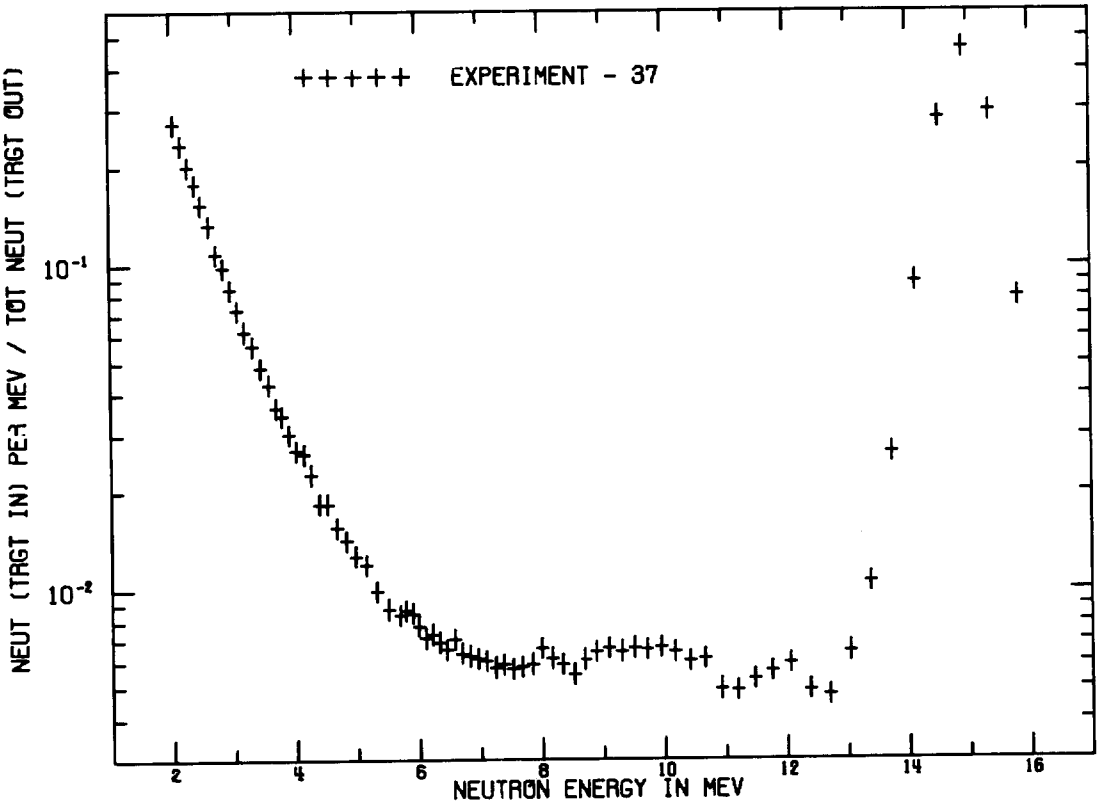

LEAD - 1.4 M.F.P. - 30 DEG.

LEAD - 1.4 M.F.P. - 30 DEG.
FLIGHTPATH = 766.00 CM DETECTOR = NE213 FWHM = 3 NS

TIME(NS)	CALCULATED ENERGY(MEV)	CNT/NS/SOURCE	ERROR	INTEGRAL
1.3900E+02	1.6285E+01	2.00930E-03	5.04750E-05	4.01860E-03
1.4100E+02	1.5815E+01	1.89785E-02	1.54945E-04	4.19756E-02
1.4300E+02	1.5365E+01	6.69500E-02	2.90990E-04	1.75876E-01
1.4500E+02	1.4934E+01	9.94150E-02	3.54585E-04	3.74706E-01
1.4700E+02	1.4521E+01	5.76800E-02	2.70095E-04	4.90066E-01
1.4900E+02	1.4125E+01	1.72600E-02	1.47765E-04	5.24586E-01
1.5100E+02	1.3745E+01	4.89000E-03	7.86800E-05	5.34366E-01
1.5300E+02	1.3380E+01	1.88740E-03	4.89220E-05	5.38140E-01
1.5500E+02	1.3030E+01	1.10485E-03	3.74660E-05	5.40350E-01
1.5700E+02	1.2693E+01	7.78150E-04	3.14730E-05	5.41906E-01
1.5900E+02	1.2370E+01	7.85650E-04	3.16230E-05	5.43478E-01
1.6100E+02	1.2058E+01	9.23400E-04	3.42675E-05	5.45324E-01
1.6300E+02	1.1759E+01	8.51450E-04	3.29125E-05	5.47027E-01
1.6500E+02	1.1470E+01	7.83050E-04	3.15705E-05	5.48593E-01
1.6700E+02	1.1192E+01	7.04500E-04	2.99570E-05	5.50002E-01
1.6900E+02	1.0924E+01	7.00450E-04	2.98710E-05	5.51403E-01
1.7100E+02	1.0666E+01	8.49600E-04	3.28770E-05	5.53103E-01
1.7300E+02	1.0417E+01	8.19200E-04	3.22875E-05	5.54741E-01
1.7500E+02	1.0176E+01	8.55100E-04	3.29830E-05	5.56451E-01
1.7700E+02	9.9438E+00	8.65250E-04	3.31760E-05	5.58182E-01
1.7900E+02	9.7194E+00	8.30300E-04	3.25040E-05	5.59842E-01
1.8100E+02	9.5025E+00	8.24250E-04	3.23855E-05	5.61491E-01
1.8300E+02	9.2929E+00	7.85300E-04	3.16165E-05	5.63061E-01
1.8500E+02	9.0901E+00	7.84550E-04	3.16010E-05	5.64630E-01
1.8700E+02	8.8939E+00	7.53200E-04	3.09680E-05	5.66137E-01
1.8900E+02	8.7041E+00	6.98550E-04	2.98305E-05	5.67534E-01
1.9100E+02	8.5203E+00	6.14950E-04	2.80025E-05	5.68764E-01
1.9300E+02	8.3423E+00	6.42450E-04	2.86170E-05	5.70049E-01
1.9500E+02	8.1698E+00	6.54400E-04	2.88800E-05	5.71358E-01
1.9700E+02	8.0026E+00	6.83850E-04	2.95180E-05	5.72725E-01
1.9900E+02	7.8406E+00	5.96600E-04	2.75855E-05	5.73918E-01
2.0100E+02	7.6834E+00	5.70700E-04	2.69845E-05	5.75060E-01
2.0300E+02	7.5310E+00	5.52500E-04	2.65550E-05	5.76165E-01
2.0500E+02	7.3830E+00	5.57800E-04	2.66810E-05	5.77280E-01
2.0700E+02	7.2394E+00	5.40800E-04	2.62750E-05	5.78362E-01
2.0900E+02	7.0999E+00	5.57800E-04	2.66815E-05	5.79478E-01
2.1100E+02	6.9645E+00	5.55450E-04	2.66260E-05	5.80589E-01
2.1300E+02	6.8329E+00	5.51950E-04	2.65425E-05	5.81692E-01
2.1500E+02	6.7050E+00	5.49250E-04	2.64770E-05	5.82791E-01
2.1700E+02	6.5807E+00	5.94150E-04	2.75290E-05	5.83979E-01
2.1900E+02	6.4598E+00	5.38300E-04	2.62145E-05	5.85056E-01
2.2100E+02	6.3422E+00	5.47700E-04	2.64410E-05	5.86151E-01
2.2300E+02	6.2278E+00	5.70200E-04	2.69730E-05	5.87292E-01
2.2500E+02	6.1165E+00	5.44600E-04	2.63660E-05	5.88381E-01
2.2700E+02	6.0082E+00	5.82900E-04	2.72695E-05	5.89547E-01

2.2900E+02	5.9027E+00	6.23750E-04	2.82005E-05	5.90794E-01
2.3100E+02	5.8000E+00	6.23400E-04	2.81925E-05	5.92041E-01
2.3300E+02	5.6999E+00	5.87450E-04	2.73750E-05	5.93216E-01
2.3500E+02	5.6025E+00	5.80650E-04	2.72175E-05	5.94377E-01
2.3700E+02	5.5075E+00	6.10150E-04	2.78945E-05	5.95597E-01
2.3900E+02	5.4149E+00	6.20900E-04	2.81365E-05	5.96839E-01
2.4100E+02	5.3246E+00	6.71900E-04	2.92605E-05	5.98183E-01
2.4300E+02	5.2366E+00	7.25700E-04	3.04010E-05	5.99634E-01
2.4500E+02	5.1508E+00	7.59350E-04	3.10930E-05	6.01153E-01
2.4700E+02	5.0670E+00	7.96900E-04	3.18470E-05	6.02747E-01
2.4900E+02	4.9853E+00	7.14900E-04	3.01760E-05	6.04177E-01
2.5100E+02	4.9056E+00	7.76350E-04	3.14370E-05	6.05729E-01
2.5300E+02	4.8277E+00	8.31150E-04	3.25205E-05	6.07392E-01
2.5500E+02	4.7517E+00	8.05650E-04	3.20205E-05	6.09003E-01
2.5700E+02	4.6775E+00	8.71150E-04	3.32885E-05	6.10745E-01
2.5900E+02	4.6050E+00	9.45050E-04	3.46640E-05	6.12635E-01
2.6100E+02	4.5342E+00	9.41150E-04	3.45935E-05	6.14518E-01
2.6300E+02	4.4650E+00	8.79450E-04	3.34465E-05	6.16277E-01
2.6500E+02	4.3974E+00	9.11750E-04	3.40515E-05	6.18100E-01
2.6700E+02	4.3313E+00	1.07460E-03	3.69520E-05	6.20249E-01
2.6900E+02	4.2667E+00	1.03185E-03	3.62130E-05	6.22313E-01
2.7100E+02	4.2035E+00	1.16720E-03	3.85035E-05	6.24647E-01
2.7300E+02	4.1417E+00	1.15190E-03	3.82520E-05	6.26951E-01
2.7500E+02	4.0813E+00	1.12930E-03	3.78760E-05	6.29210E-01
2.7700E+02	4.0222E+00	1.13925E-03	3.80420E-05	6.31488E-01
2.7900E+02	3.9644E+00	1.10900E-03	3.75360E-05	6.33706E-01
2.8100E+02	3.9078E+00	1.31040E-03	4.07880E-05	6.36327E-01
2.8300E+02	3.8524E+00	1.26965E-03	4.01510E-05	6.38866E-01
2.8500E+02	3.7982E+00	1.34380E-03	4.13025E-05	6.41554E-01
2.8700E+02	3.7452E+00	1.30255E-03	4.06660E-05	6.44159E-01
2.8900E+02	3.6932E+00	1.32675E-03	4.10400E-05	6.46813E-01
2.9100E+02	3.6423E+00	1.48630E-03	4.34290E-05	6.49785E-01
2.9300E+02	3.5925E+00	1.46475E-03	4.31145E-05	6.52715E-01
2.9500E+02	3.5437E+00	1.52160E-03	4.39405E-05	6.55758E-01
2.9700E+02	3.4958E+00	1.51530E-03	4.38490E-05	6.58789E-01
2.9900E+02	3.4490E+00	1.62730E-03	4.54355E-05	6.62043E-01
3.0100E+02	3.4030E+00	1.66405E-03	4.59445E-05	6.65371E-01
3.0300E+02	3.3580E+00	1.67695E-03	4.61215E-05	6.68725E-01
3.0500E+02	3.3139E+00	1.72500E-03	4.67755E-05	6.72175E-01
3.0700E+02	3.2706E+00	1.74945E-03	4.71050E-05	6.75674E-01
3.0900E+02	3.2282E+00	1.73430E-03	4.69015E-05	6.79143E-01
3.1100E+02	3.1866E+00	1.73070E-03	4.68530E-05	6.82604E-01
3.1300E+02	3.1458E+00	1.73865E-03	4.69600E-05	6.86081E-01
3.1500E+02	3.1058E+00	1.90725E-03	4.91775E-05	6.89896E-01
3.1700E+02	3.0665E+00	1.97445E-03	5.00350E-05	6.93845E-01
3.1900E+02	3.0280E+00	1.95845E-03	4.98315E-05	6.97762E-01
3.2100E+02	2.9902E+00	1.97635E-03	5.00600E-05	7.01714E-01
3.2300E+02	2.9531E+00	2.00045E-03	5.03600E-05	7.05715E-01

3.2500E+02	2.9167E+00	2.09625E-03	5.15500E-05	7.09908E-01
3.2700E+02	2.8810E+00	1.93590E-03	4.95445E-05	7.13780E-01
3.2900E+02	2.8459E+00	2.32625E-03	5.43000E-05	7.18432E-01
3.3100E+02	2.8115E+00	2.11465E-03	5.17750E-05	7.22661E-01
3.3300E+02	2.7777E+00	2.18915E-03	5.26800E-05	7.27040E-01
3.3500E+02	2.7444E+00	2.17545E-03	5.25150E-05	7.31391E-01
3.3700E+02	2.7118E+00	2.26625E-03	5.35950E-05	7.35923E-01
3.3900E+02	2.6798E+00	2.39140E-03	5.50500E-05	7.40706E-01
3.4100E+02	2.6483E+00	2.48080E-03	5.60700E-05	7.45667E-01
3.4300E+02	2.6174E+00	2.31430E-03	5.41600E-05	7.50296E-01
3.4500E+02	2.5870E+00	2.34370E-03	5.45000E-05	7.54983E-01
3.4700E+02	2.5571E+00	2.65965E-03	5.80500E-05	7.60303E-01
3.4900E+02	2.5278E+00	2.43375E-03	5.55350E-05	7.65170E-01
3.5100E+02	2.4990E+00	2.25580E-03	5.34700E-05	7.69682E-01
3.5300E+02	2.4706E+00	2.37195E-03	5.48300E-05	7.74426E-01
3.5500E+02	2.4427E+00	2.52395E-03	5.65550E-05	7.79474E-01
3.5700E+02	2.4153E+00	2.41050E-03	5.52700E-05	7.84295E-01
3.5900E+02	2.3884E+00	2.47155E-03	5.59650E-05	7.89238E-01
3.6100E+02	2.3619E+00	2.37645E-03	5.48800E-05	7.93991E-01
3.6300E+02	2.3359E+00	2.36030E-03	5.46950E-05	7.98711E-01
3.6500E+02	2.3102E+00	2.35330E-03	5.46100E-05	8.03418E-01
3.6700E+02	2.2850E+00	2.43490E-03	5.55500E-05	8.08288E-01
3.6900E+02	2.2602E+00	2.39845E-03	5.51350E-05	8.13085E-01
3.7100E+02	2.2359E+00	2.24320E-03	5.33250E-05	8.17571E-01
3.7300E+02	2.2119E+00	2.35655E-03	5.46500E-05	8.22284E-01
3.7500E+02	2.1882E+00	2.25090E-03	5.34150E-05	8.26786E-01
3.7700E+02	2.1650E+00	2.21430E-03	5.29800E-05	8.31214E-01
3.7900E+02	2.1421E+00	2.21830E-03	5.30250E-05	8.35651E-01
3.8100E+02	2.1196E+00	2.27860E-03	5.37400E-05	8.40208E-01
3.8300E+02	2.0975E+00	2.18100E-03	5.25800E-05	8.44570E-01
3.8500E+02	2.0757E+00	2.03145E-03	5.07500E-05	8.48633E-01
3.8700E+02	2.0542E+00	1.89740E-03	4.90510E-05	8.52428E-01
3.8900E+02	2.0331E+00	1.91580E-03	4.92875E-05	8.56260E-01
3.9100E+02	2.0123E+00	1.96815E-03	4.99545E-05	8.60196E-01
3.9300E+02	1.9918E+00	1.89020E-03	4.89575E-05	8.63976E-01
3.9500E+02	1.9716E+00	1.74275E-03	4.70150E-05	8.67462E-01
3.9700E+02	1.9517E+00	1.78080E-03	4.75240E-05	8.71023E-01
3.9900E+02	1.9321E+00	1.69685E-03	4.63935E-05	8.74417E-01
4.0100E+02	1.9128E+00	1.69035E-03	4.63050E-05	8.77798E-01
4.0300E+02	1.8938E+00	1.61510E-03	4.52660E-05	8.81028E-01
4.0500E+02	1.8751E+00	1.55690E-03	4.44450E-05	8.84142E-01
4.0700E+02	1.8567E+00	1.41310E-03	4.23500E-05	8.86968E-01
4.0900E+02	1.8385E+00	1.37435E-03	4.17670E-05	8.89717E-01
4.1100E+02	1.8206E+00	1.38915E-03	4.19910E-05	8.92495E-01
4.1300E+02	1.8030E+00	1.28945E-03	4.04615E-05	8.95074E-01
4.1500E+02	1.7856E+00	1.19760E-03	3.90000E-05	8.97469E-01
4.1700E+02	1.7685E+00	1.17520E-03	3.86350E-05	8.99819E-01

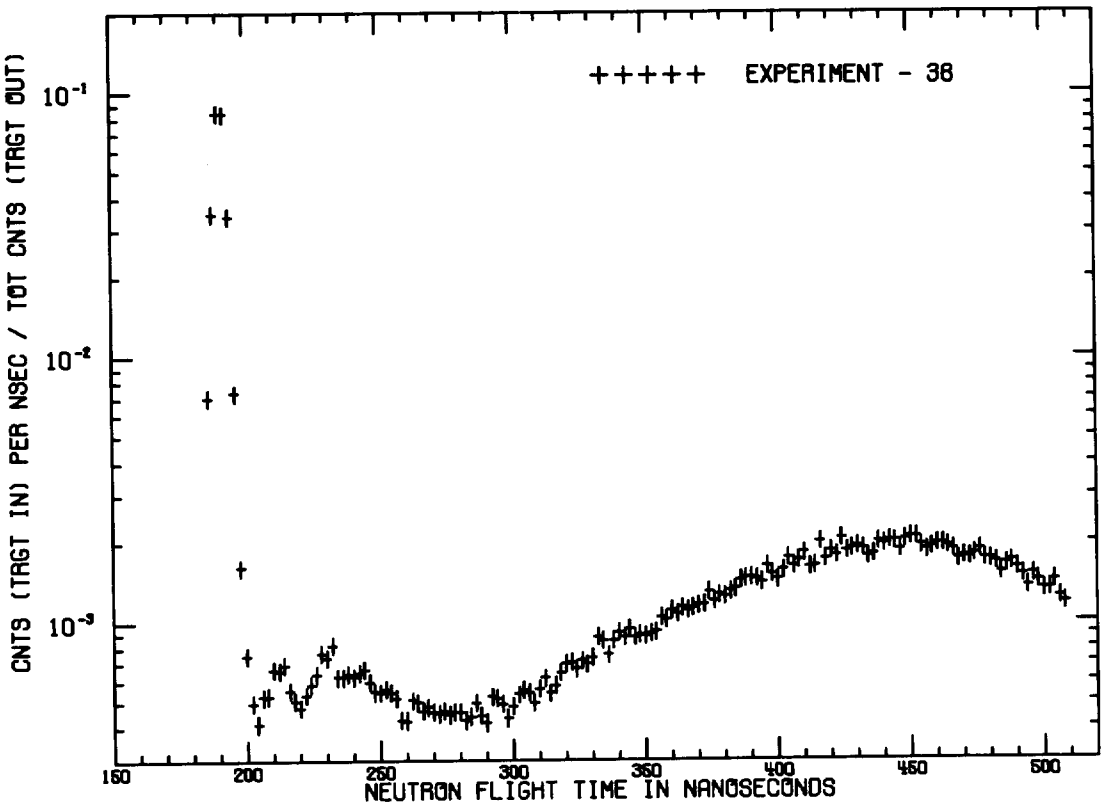

LEAD - 1.4 M.F.P. - 120 DEG.

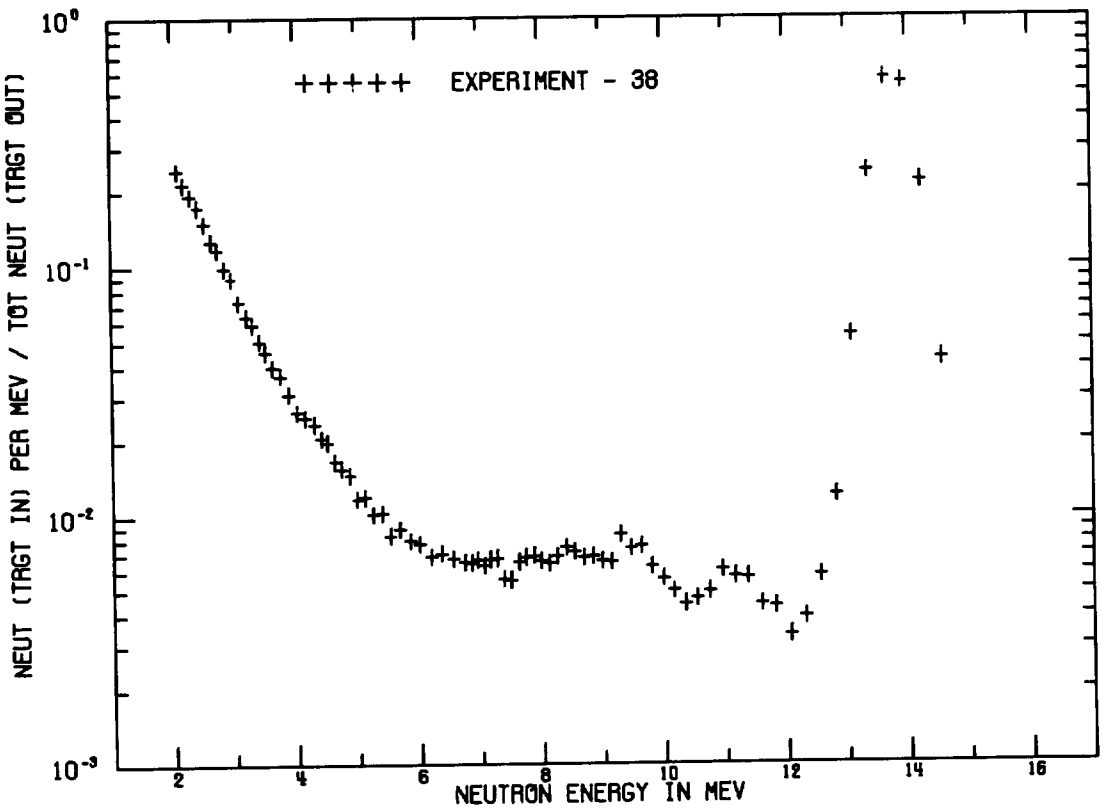

LEAD - 1.4 M.F.P. - 120 DEG.

LEAD - 1.4 M.F.P. - 120 DEG.
FLIGHTPATH = 975.20 CM DETECTOR = NE213 FWHM = 3 NS

TIME(NS)	CALCULATED ENERGY(MEV)	CNT/NS/SOURCE	ERROR	INTEGRAL
1.8500E+02	1.4868E+01	1.32805E-03	5.57150E-05	2.65610E-03
1.8700E+02	1.4544E+01	7.00500E-03	1.27590E-04	1.66661E-02
1.8900E+02	1.4231E+01	3.47080E-02	2.83855E-04	8.60821E-02
1.9100E+02	1.3928E+01	8.36700E-02	4.40685E-04	2.53422E-01
1.9300E+02	1.3634E+01	8.34750E-02	4.40175E-04	4.20372E-01
1.9500E+02	1.3350E+01	3.40015E-02	2.80955E-04	4.88375E-01
1.9700E+02	1.3075E+01	7.31050E-03	1.30340E-04	5.02996E-01
1.9900E+02	1.2808E+01	1.61020E-03	6.13100E-05	5.06216E-01
2.0100E+02	1.2549E+01	7.47500E-04	4.19120E-05	5.07711E-01
2.0300E+02	1.2298E+01	4.95690E-04	3.42375E-05	5.08703E-01
2.0500E+02	1.2055E+01	4.12450E-04	3.12890E-05	5.09528E-01
2.0700E+02	1.1819E+01	5.23250E-04	3.51590E-05	5.10574E-01
2.0900E+02	1.1589E+01	5.25750E-04	3.52415E-05	5.11626E-01
2.1100E+02	1.1367E+01	6.62600E-04	3.94910E-05	5.12951E-01
2.1300E+02	1.1150E+01	6.57350E-04	3.93370E-05	5.14266E-01
2.1500E+02	1.0940E+01	6.87800E-04	4.02255E-05	5.15641E-01
2.1700E+02	1.0736E+01	5.53850E-04	3.61550E-05	5.16749E-01
2.1900E+02	1.0538E+01	5.07000E-04	3.46180E-05	5.17763E-01
2.2100E+02	1.0345E+01	4.76225E-04	3.35710E-05	5.18715E-01
2.2300E+02	1.0157E+01	5.31750E-04	3.54390E-05	5.19779E-01
2.2500E+02	9.9743E+00	5.82900E-04	3.70760E-05	5.20945E-01
2.2700E+02	9.7966E+00	6.38550E-04	3.87775E-05	5.22222E-01
2.2900E+02	9.6236E+00	7.61750E-04	4.23045E-05	5.23745E-01
2.3100E+02	9.4551E+00	7.34200E-04	4.15425E-05	5.25214E-01
2.3300E+02	9.2911E+00	8.16550E-04	4.37820E-05	5.26847E-01
2.3500E+02	9.1313E+00	6.21750E-04	3.82725E-05	5.28090E-01
2.3700E+02	8.9757E+00	6.21500E-04	3.82650E-05	5.29333E-01
2.3900E+02	8.8240E+00	6.38750E-04	3.87840E-05	5.30611E-01
2.4100E+02	8.6761E+00	6.21800E-04	3.82735E-05	5.31854E-01
2.4300E+02	8.5319E+00	6.43200E-04	3.89170E-05	5.33141E-01
2.4500E+02	8.3913E+00	6.60700E-04	3.94360E-05	5.34462E-01
2.4700E+02	8.2542E+00	5.92150E-04	3.73645E-05	5.35647E-01
2.4900E+02	8.1204E+00	5.45050E-04	3.58715E-05	5.36737E-01
2.5100E+02	7.9899E+00	5.42900E-04	3.58015E-05	5.37822E-01
2.5300E+02	7.8625E+00	5.60700E-04	3.63745E-05	5.38944E-01
2.5500E+02	7.7381E+00	5.43100E-04	3.58080E-05	5.40030E-01
2.5700E+02	7.6167E+00	5.14450E-04	3.48675E-05	5.41059E-01
2.5900E+02	7.4981E+00	4.27155E-04	3.18295E-05	5.41913E-01
2.6100E+02	7.3822E+00	4.23725E-04	3.17045E-05	5.42761E-01
2.6300E+02	7.2691E+00	5.08100E-04	3.46550E-05	5.43777E-01
2.6500E+02	7.1585E+00	4.98685E-04	3.43385E-05	5.44774E-01
2.6700E+02	7.0505E+00	4.62260E-04	3.30850E-05	5.45699E-01
2.6900E+02	6.9449E+00	4.79005E-04	3.36670E-05	5.46657E-01
2.7100E+02	6.8416E+00	4.58900E-04	3.29665E-05	5.47575E-01
2.7300E+02	6.7407E+00	4.51865E-04	3.27180E-05	5.48478E-01

2.7500E+02	6.6419E+00	4.62185E-04	3.30820E-05	5.49403E-01
2.7700E+02	6.5454E+00	4.47590E-04	3.25660E-05	5.50298E-01
2.7900E+02	6.4509E+00	4.57370E-04	3.29130E-05	5.51213E-01
2.8100E+02	6.3585E+00	4.56880E-04	3.28955E-05	5.52126E-01
2.8300E+02	6.2680E+00	4.24660E-04	3.17385E-05	5.52976E-01
2.8500E+02	6.1795E+00	4.40430E-04	3.23100E-05	5.53857E-01
2.8700E+02	6.0928E+00	4.94630E-04	3.42015E-05	5.54846E-01
2.8900E+02	6.0080E+00	4.44150E-04	3.24435E-05	5.55734E-01
2.9100E+02	5.9249E+00	4.17415E-04	3.14725E-05	5.56569E-01
2.9300E+02	5.8435E+00	5.23450E-04	3.51665E-05	5.57616E-01
2.9500E+02	5.7638E+00	5.14950E-04	3.48835E-05	5.58646E-01
2.9700E+02	5.6858E+00	4.91040E-04	3.40795E-05	5.59628E-01
2.9900E+02	5.6093E+00	4.33815E-04	3.20715E-05	5.60495E-01
3.0100E+02	5.5343E+00	4.82005E-04	3.37700E-05	5.61459E-01
3.0300E+02	5.4609E+00	5.34000E-04	3.55115E-05	5.62527E-01
3.0500E+02	5.3889E+00	5.53850E-04	3.61550E-05	5.63635E-01
3.0700E+02	5.3183E+00	5.42950E-04	3.58040E-05	5.64721E-01
3.0900E+02	5.2491E+00	4.96930E-04	3.42790E-05	5.65715E-01
3.1100E+02	5.1812E+00	5.57600E-04	3.62750E-05	5.66830E-01
3.1300E+02	5.1147E+00	6.15550E-04	3.80845E-05	5.68061E-01
3.1500E+02	5.0494E+00	5.39450E-04	3.56895E-05	5.69140E-01
3.1700E+02	4.9854E+00	5.78300E-04	3.69310E-05	5.70297E-01
3.1900E+02	4.9226E+00	6.45250E-04	3.89780E-05	5.71587E-01
3.2100E+02	4.8610E+00	6.94800E-04	4.04260E-05	5.72977E-01
3.2300E+02	4.8005E+00	7.01450E-04	4.06175E-05	5.74380E-01
3.2500E+02	4.7412E+00	6.66350E-04	3.96020E-05	5.75712E-01
3.2700E+02	4.6829E+00	7.14050E-04	4.09755E-05	5.77141E-01
3.2900E+02	4.6257E+00	6.93950E-04	4.04025E-05	5.78528E-01
3.3100E+02	4.5696E+00	7.35100E-04	4.15675E-05	5.79999E-01
3.3300E+02	4.5145E+00	8.78200E-04	4.53860E-05	5.81755E-01
3.3500E+02	4.4603E+00	8.54700E-04	4.47820E-05	5.83464E-01
3.3700E+02	4.4072E+00	7.50800E-04	4.20030E-05	5.84966E-01
3.3900E+02	4.3550E+00	8.48700E-04	4.46265E-05	5.86663E-01
3.4100E+02	4.3037E+00	9.14150E-04	4.62970E-05	5.88492E-01
3.4300E+02	4.2533E+00	8.75400E-04	4.53155E-05	5.90243E-01
3.4500E+02	4.2038E+00	9.38850E-04	4.69120E-05	5.92120E-01
3.4700E+02	4.1552E+00	8.78900E-04	4.54050E-05	5.93878E-01
3.4900E+02	4.1074E+00	8.93850E-04	4.57845E-05	5.95666E-01
3.5100E+02	4.0604E+00	8.89750E-04	4.56805E-05	5.97445E-01
3.5300E+02	4.0142E+00	9.06500E-04	4.61040E-05	5.99258E-01
3.5500E+02	3.9688E+00	9.17400E-04	4.63775E-05	6.01093E-01
3.5700E+02	3.9242E+00	1.04225E-03	4.94025E-05	6.03178E-01
3.5900E+02	3.8803E+00	1.01640E-03	4.87915E-05	6.05210E-01
3.6100E+02	3.8372E+00	1.10865E-03	5.09400E-05	6.07428E-01
3.6300E+02	3.7948E+00	1.07315E-03	5.01250E-05	6.09574E-01
3.6500E+02	3.7531E+00	1.13315E-03	5.14950E-05	6.11840E-01
3.6700E+02	3.7120E+00	1.10325E-03	5.08150E-05	6.14047E-01
3.6900E+02	3.6717E+00	1.12565E-03	5.13250E-05	6.16298E-01

3.7100E+02	3.6319E+00	1.15580E-03	5.20000E-05	6.18610E-01
3.7300E+02	3.5929E+00	1.16635E-03	5.22350E-05	6.20942E-01
3.7500E+02	3.5544E+00	1.29385E-03	5.49950E-05	6.23530E-01
3.7700E+02	3.5166E+00	1.19400E-03	5.28450E-05	6.25918E-01
3.7900E+02	3.4794E+00	1.26570E-03	5.44000E-05	5.28449E-01
3.8100E+02	3.4428E+00	1.24660E-03	5.39900E-05	6.30943E-01
3.8300E+02	3.4067E+00	1.30365E-03	5.52050E-05	6.33550E-01
3.8500E+02	3.3712E+00	1.33165E-03	5.57900E-05	6.36213E-01
3.8700E+02	3.3363E+00	1.43340E-03	5.78650E-05	6.39080E-01
3.8900E+02	3.3019E+00	1.45650E-03	5.83300E-05	6.41993E-01
3.9100E+02	3.2680E+00	1.46040E-03	5.84050E-05	6.44914E-01
3.9300E+02	3.2346E+00	1.44370E-03	5.80700E-05	6.47801E-01
3.9500E+02	3.2018E+00	1.40170E-03	5.72250E-05	6.50605E-01
3.9700E+02	3.1695E+00	1.61440E-03	6.13900E-05	6.53833E-01
3.9900E+02	3.1376E+00	1.50520E-03	5.92900E-05	6.56844E-01
4.0100E+02	3.1062E+00	1.44170E-03	5.80300E-05	6.59727E-01
4.0300E+02	3.0753E+00	1.56095E-03	6.03700E-05	6.62849E-01
4.0500E+02	3.0449E+00	1.73910E-03	6.37000E-05	6.66327E-01
4.0700E+02	3.0149E+00	1.62080E-03	6.15100E-05	6.69569E-01
4.0900E+02	2.9853E+00	1.69535E-03	6.29000E-05	6.72960E-01
4.1100E+02	2.9562E+00	1.81325E-03	6.50400E-05	6.76586E-01
4.1300E+02	2.9275E+00	1.59945E-03	6.11050E-05	6.79785E-01
4.1500E+02	2.8992E+00	1.61910E-03	6.14750E-05	6.83023E-01
4.1700E+02	2.8714E+00	1.99200E-03	6.81550E-05	6.87007E-01
4.1900E+02	2.8439E+00	1.71550E-03	6.32700E-05	6.90438E-01
4.2100E+02	2.8168E+00	1.84025E-03	6.55200E-05	6.94119E-01
4.2300E+02	2.7901E+00	1.76685E-03	6.42050E-05	6.97652E-01
4.2500E+02	2.7638E+00	2.05515E-03	6.92200E-05	7.01763E-01
4.2700E+02	2.7379E+00	1.84890E-03	6.56700E-05	7.05461E-01
4.2900E+02	2.7123E+00	1.87925E-03	6.62050E-05	7.09219E-01
4.3100E+02	2.6871E+00	1.91970E-03	6.69100E-05	7.13058E-01
4.3300E+02	2.6622E+00	1.88155E-03	6.62450E-05	7.16822E-01
4.3500E+02	2.6377E+00	1.75575E-03	6.40050E-05	7.20333E-01
4.3700E+02	2.6135E+00	1.78590E-03	6.45500E-05	7.23905E-01
4.3900E+02	2.5896E+00	2.00120E-03	6.83100E-05	7.27907E-01
4.4100E+02	2.5661E+00	1.96095E-03	6.76250E-05	7.31829E-01
4.4300E+02	2.5429E+00	2.02265E-03	6.86750E-05	7.35874E-01
4.4500E+02	2.5200E+00	2.00805E-03	6.84250E-05	7.39891E-01
4.4700E+02	2.4974E+00	1.85730E-03	6.58200E-05	7.43605E-01
4.4900E+02	2.4751E+00	2.03625E-03	6.89050E-05	7.47678E-01
4.5100E+02	2.4531E+00	2.07625E-03	6.95750E-05	7.51830E-01
4.5300E+02	2.4314E+00	2.07035E-03	6.94750E-05	7.55971E-01
4.5500E+02	2.4100E+00	1.92950E-03	6.70800E-05	7.59830E-01
4.5700E+02	2.3889E+00	1.85195E-03	6.57250E-05	7.63534E-01
4.5900E+02	2.3680E+00	1.89155E-03	6.64200E-05	7.67317E-01
4.6100E+02	2.3475E+00	1.96300E-03	6.76600E-05	7.71243E-01
4.6300E+02	2.3271E+00	1.96190E-03	6.76400E-05	7.75167E-01
4.6500E+02	2.3071E+00	1.92255E-03	6.69600E-05	7.79012E-01

4.6700E+02	2.2873E+00	1.86005E-03	6.58700E-05	7.82732E-01
4.6900E+02	2.2678E+00	1.70875E-03	6.31450E-05	7.86149E-01
4.7100E+02	2.2485E+00	1.74910E-03	6.38850E-05	7.89648E-01
4.7300E+02	2.2294E+00	1.73155E-03	6.35650E-05	7.93111E-01
4.7500E+02	2.2106E+00	1.78630E-03	6.45550E-05	7.96683E-01
4.7700E+02	2.1921E+00	1.86025E-03	6.58700E-05	8.00404E-01
4.7900E+02	2.1737E+00	1.71730E-03	6.33050E-05	8.03838E-01
4.8100E+02	2.1556E+00	1.70995E-03	6.31700E-05	8.07258E-01
4.8300E+02	2.1378E+00	1.66580E-03	6.23500E-05	8.10590E-01
4.8500E+02	2.1201E+00	1.52440E-03	5.96650E-05	8.13639E-01
4.8700E+02	2.1027E+00	1.64080E-03	6.18850E-05	8.16920E-01
4.8900E+02	2.0855E+00	1.67410E-03	6.25050E-05	8.20268E-01
4.9100E+02	2.0684E+00	1.58335E-03	6.08000E-05	8.23435E-01
4.9300E+02	2.0516E+00	1.49030E-03	5.89950E-05	8.26416E-01
4.9500E+02	2.0350E+00	1.35010E-03	5.61700E-05	8.29116E-01
4.9700E+02	2.0186E+00	1.50050E-03	5.91950E-05	8.32117E-01
4.9900E+02	2.0024E+00	1.41720E-03	5.75400E-05	8.34951E-01
5.0100E+02	1.9864E+00	1.31575E-03	5.54550E-05	8.37583E-01
5.0300E+02	1.9706E+00	1.32335E-03	5.56150E-05	8.40230E-01
5.0500E+02	1.9550E+00	1.41685E-03	5.75350E-05	8.43063E-01
5.0700E+02	1.9396E+00	1.23110E-03	5.36550E-05	8.45525E-01
5.0900E+02	1.9243E+00	1.17300E-03	5.23850E-05	8.47871E-01

Water 1.1 m.f.p.

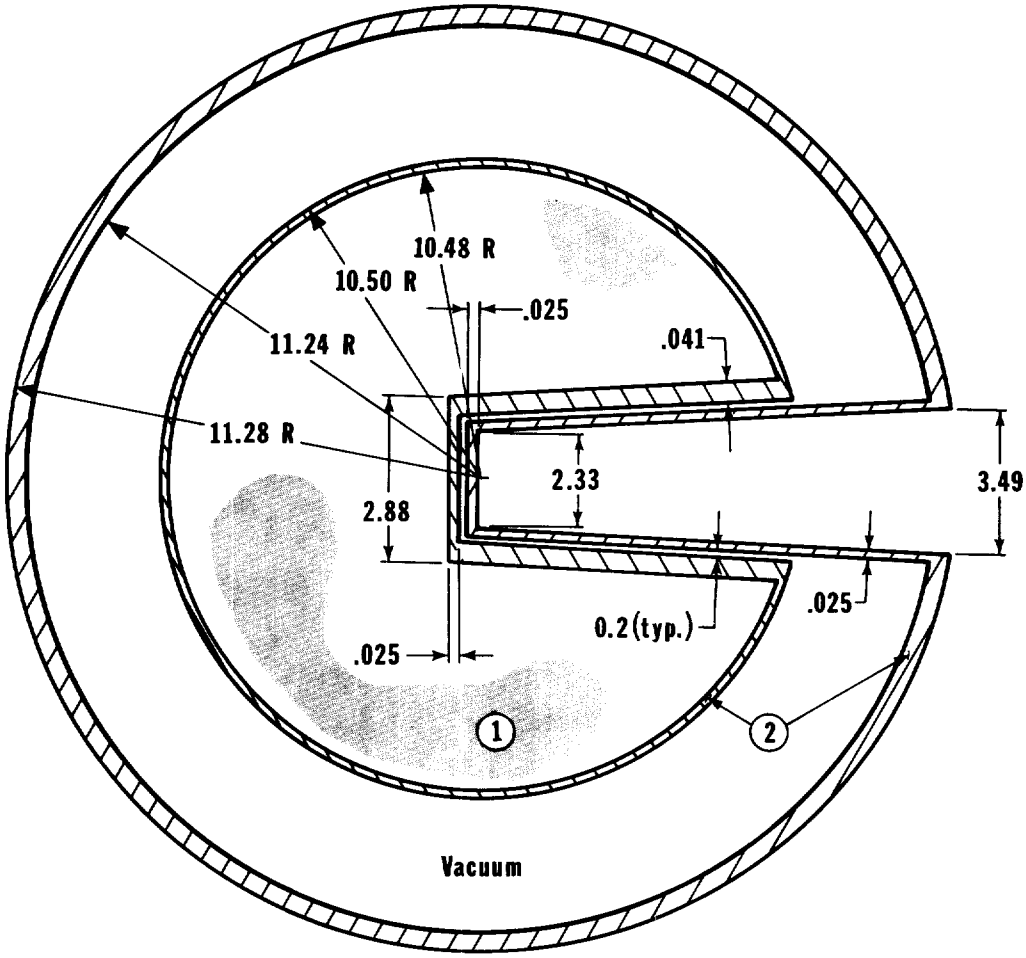

All Dimensions in Centimeters

Zone	Density (g/cm^3)	Material	Atomic %
1	1.0	H	66.7
		O	33.3
2	7.9	Fe	68.6
		Cr	20.0
		Ni	8.4
		Si	2.0
		Mn	1.0

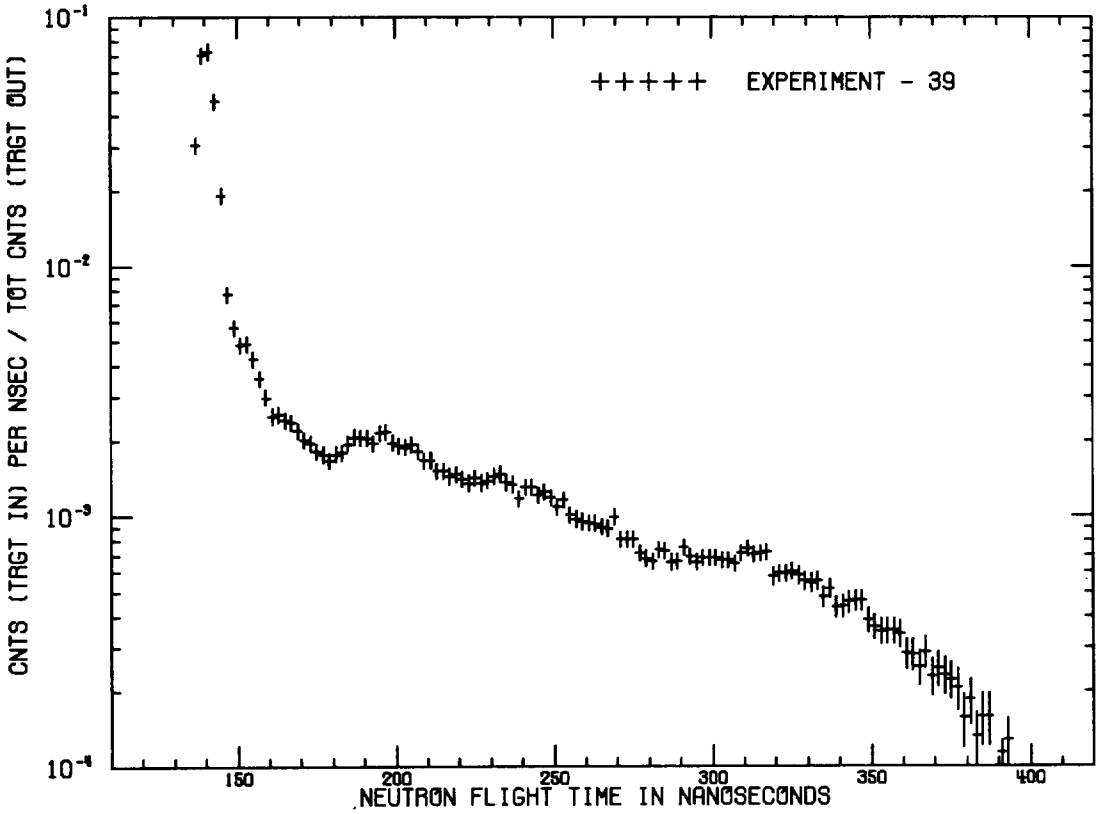

WATER - 1.1 M.F.P. - 30 DEG.

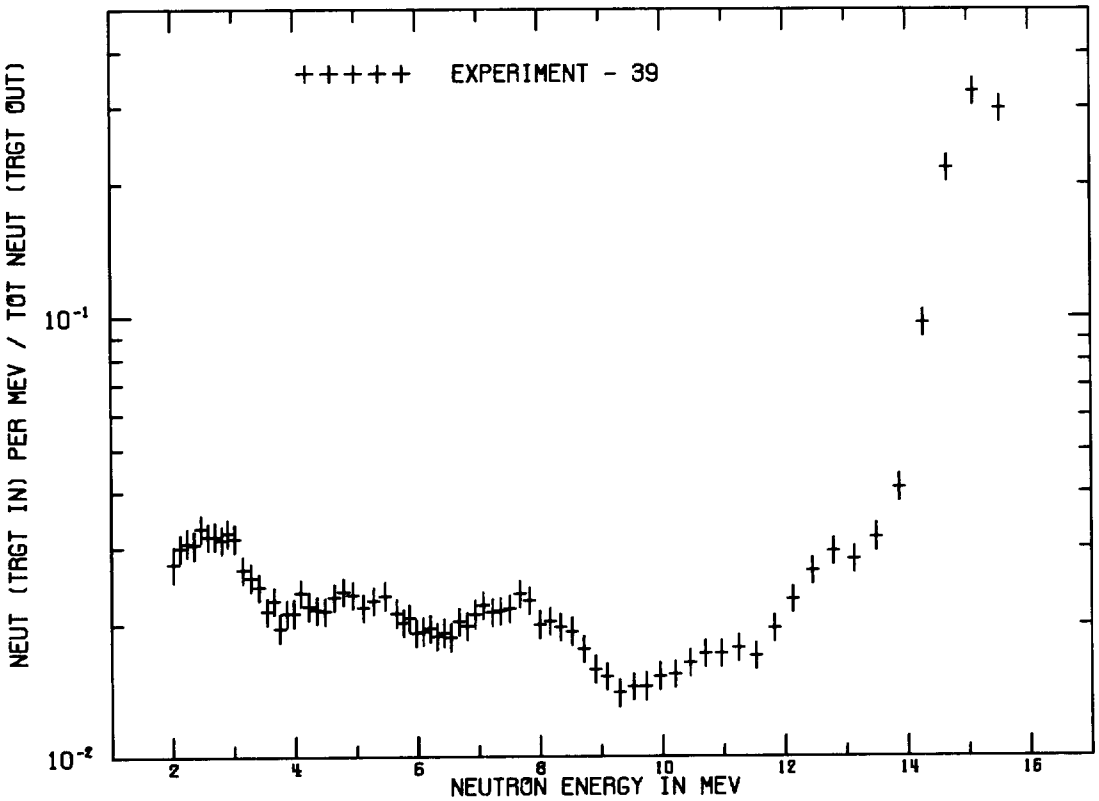

WATER - 1.1 M.F.P. - 30 DEG.

WATER - 1.1 M.F.P. - 30 DEG.
FLIGHTPATH = 754.00 CM DETECTOR = PILOT B FWHM = 5 NS

TIME(NS)	CALCULATED ENERGY(MEV)	CNT/NS/SOURCE	ERROR	INTEGRAL
1.3600E+02	1.6488E+01	6.44305E-03	1.02211E-04	1.28861E-02
1.3800E+02	1.6001E+01	3.07251E-02	2.13106E-04	7.43363E-02
1.4000E+02	1.5536E+01	7.03186E-02	3.20040E-04	2.14973E-01
1.4200E+02	1.5091E+01	7.29049E-02	3.25814E-04	3.60783E-01
1.4400E+02	1.4665E+01	4.58868E-02	2.59315E-04	4.52557E-01
1.4600E+02	1.4257E+01	1.93092E-02	1.70222E-04	4.91175E-01
1.4800E+02	1.3866E+01	7.72380E-03	1.10866E-04	5.06623E-01
1.5000E+02	1.3490E+01	5.65428E-03	9.64944E-05	5.17931E-01
1.5200E+02	1.3130E+01	4.82600E-03	9.01008E-05	5.27583E-01
1.5400E+02	1.2784E+01	4.86348E-03	9.04032E-05	5.37310E-01
1.5600E+02	1.2452E+01	4.25170E-03	8.53920E-05	5.45814E-01
1.5800E+02	1.2133E+01	3.55540E-03	7.93008E-05	5.52924E-01
1.6000E+02	1.1826E+01	2.97893E-03	7.38864E-05	5.58882E-01
1.6200E+02	1.1530E+01	2.50841E-03	6.91488E-05	5.63899E-01
1.6400E+02	1.1246E+01	2.55247E-03	6.95952E-05	5.69004E-01
1.6600E+02	1.0972E+01	2.41836E-03	6.81984E-05	5.73841E-01
1.6800E+02	1.0707E+01	2.37201E-03	6.77088E-05	5.78585E-01
1.7000E+02	1.0453E+01	2.20226E-03	6.58800E-05	5.82989E-01
1.7200E+02	1.0207E+01	2.02512E-03	6.39072E-05	5.87040E-01
1.7400E+02	9.9702E+00	1.96188E-03	6.32016E-05	5.90963E-01
1.7600E+02	9.7413E+00	1.81416E-03	6.14880E-05	5.94592E-01
1.7800E+02	9.5203E+00	1.76525E-03	6.09120E-05	5.98122E-01
1.8000E+02	9.3068E+00	1.66336E-03	5.97024E-05	6.01449E-01
1.8200E+02	9.1004E+00	1.76904E-03	6.09552E-05	6.04987E-01
1.8400E+02	8.9009E+00	1.80117E-03	6.13296E-05	6.08589E-01
1.8600E+02	8.7078E+00	1.94828E-03	6.30432E-05	6.12486E-01
1.8800E+02	8.5210E+00	2.07747E-03	6.44976E-05	6.16641E-01
1.9000E+02	8.3402E+00	2.05780E-03	6.42816E-05	6.20756E-01
1.9200E+02	8.1651E+00	2.05520E-03	6.42528E-05	6.24867E-01
1.9400E+02	7.9954E+00	1.95988E-03	6.31728E-05	6.28787E-01
1.9600E+02	7.8311E+00	2.15303E-03	6.53328E-05	6.33093E-01
1.9800E+02	7.6717E+00	2.17404E-03	6.55632E-05	6.37441E-01
2.0000E+02	7.5172E+00	1.96996E-03	6.32880E-05	6.41381E-01
2.0200E+02	7.3674E+00	1.91241E-03	6.26256E-05	6.45205E-01
2.0400E+02	7.2219E+00	1.88741E-03	6.23376E-05	6.48980E-01
2.0600E+02	7.0808E+00	1.93507E-03	6.28848E-05	6.52850E-01
2.0800E+02	6.9438E+00	1.81014E-03	6.14448E-05	6.56471E-01
2.1000E+02	6.8107E+00	1.66375E-03	5.97024E-05	6.59798E-01
2.1200E+02	6.6815E+00	1.67583E-03	5.98464E-05	6.63150E-01
2.1400E+02	6.5559E+00	1.51163E-03	5.78448E-05	6.66173E-01
2.1600E+02	6.4338E+00	1.51142E-03	5.78304E-05	6.69196E-01
2.1800E+02	6.3151E+00	1.44308E-03	5.69808E-05	6.72082E-01
2.2000E+02	6.1996E+00	1.46825E-03	5.72976E-05	6.75019E-01
2.2200E+02	6.0874E+00	1.40534E-03	5.65056E-05	6.77829E-01
2.2400E+02	5.9781E+00	1.35406E-03	5.58432E-05	6.80537E-01

2.2600E+02	5.8718E+00	1.42443E-03	5.67360E-05	6.83386E-01
2.2800E+02	5.7683E+00	1.35482E-03	5.58576E-05	6.86096E-01
2.3000E+02	5.6675E+00	1.38599E-03	5.62464E-05	6.88868E-01
2.3200E+02	5.5693E+00	1.44390E-03	5.69952E-05	6.91756E-01
2.3400E+02	5.4737E+00	1.47596E-03	5.73984E-05	6.94708E-01
2.3600E+02	5.3805E+00	1.36961E-03	5.60448E-05	6.97447E-01
2.3800E+02	5.2897E+00	1.33965E-03	5.56560E-05	7.00126E-01
2.4000E+02	5.2012E+00	1.17337E-03	5.34672E-05	7.02473E-01
2.4200E+02	5.1149E+00	1.30419E-03	5.51952E-05	7.05081E-01
2.4400E+02	5.0307E+00	1.30478E-03	5.52096E-05	7.07691E-01
2.4600E+02	4.9486E+00	1.21476E-03	5.40144E-05	7.10120E-01
2.4800E+02	4.8685E+00	1.24821E-03	5.44608E-05	7.12617E-01
2.5000E+02	4.7903E+00	1.18765E-03	5.36544E-05	7.14992E-01
2.5200E+02	4.7140E+00	1.08816E-03	5.23008E-05	7.17168E-01
2.5400E+02	4.6395E+00	1.15842E-03	5.32656E-05	7.19485E-01
2.5600E+02	4.5667E+00	1.01164E-03	5.12352E-05	7.21509E-01
2.5800E+02	4.4957E+00	9.74160E-04	5.07024E-05	7.23457E-01
2.6000E+02	4.4263E+00	9.54230E-04	5.04288E-05	7.25365E-01
2.6200E+02	4.3585E+00	9.41472E-04	5.02416E-05	7.27248E-01
2.6400E+02	4.2923E+00	9.35741E-04	5.01552E-05	7.29120E-01
2.6600E+02	4.2276E+00	9.06998E-04	4.97520E-05	7.30934E-01
2.6800E+02	4.1643E+00	8.94802E-04	4.95648E-05	7.32723E-01
2.7000E+02	4.1024E+00	9.95890E-04	5.10192E-05	7.34715E-01
2.7200E+02	4.0419E+00	8.11685E-04	4.83408E-05	7.36338E-01
2.7400E+02	3.9827E+00	8.11368E-04	4.83408E-05	7.37961E-01
2.7600E+02	3.9249E+00	8.07998E-04	4.82976E-05	7.39577E-01
2.7800E+02	3.8683E+00	7.14211E-04	4.68720E-05	7.41006E-01
2.8000E+02	3.8129E+00	6.78974E-04	4.63248E-05	7.42364E-01
2.8200E+02	3.7586E+00	6.60370E-04	4.60368E-05	7.43684E-01
2.8400E+02	3.7056E+00	7.37669E-04	4.72320E-05	7.45160E-01
2.8600E+02	3.6536E+00	7.28827E-04	4.71024E-05	7.46617E-01
2.8800E+02	3.6028E+00	6.58224E-04	4.60080E-05	7.47934E-01
2.9000E+02	3.5530E+00	6.60859E-04	4.60512E-05	7.49256E-01
2.9200E+02	3.5042E+00	7.52918E-04	4.74624E-05	7.50761E-01
2.9400E+02	3.4564E+00	6.90869E-04	4.65120E-05	7.52143E-01
2.9600E+02	3.4096E+00	6.57576E-04	4.59936E-05	7.53458E-01
2.9800E+02	3.3638E+00	6.81970E-04	4.63680E-05	7.54822E-01
3.0000E+02	3.3188E+00	6.84576E-04	4.64112E-05	7.56191E-01
3.0200E+02	3.2748E+00	6.85310E-04	4.64256E-05	7.57562E-01
3.0400E+02	3.2316E+00	6.67310E-04	4.61520E-05	7.58897E-01
3.0600E+02	3.1893E+00	6.69528E-04	4.61808E-05	7.60236E-01
3.0800E+02	3.1478E+00	6.47122E-04	4.58352E-05	7.61530E-01
3.1000E+02	3.1071E+00	7.11101E-04	4.68288E-05	7.62952E-01
3.1200E+02	3.0672E+00	7.43544E-04	4.73184E-05	7.64439E-01
3.1400E+02	3.0281E+00	7.03138E-04	4.66992E-05	7.65845E-01
3.1600E+02	2.9897E+00	7.12138E-04	4.68432E-05	7.67270E-01
3.1800E+02	2.9520E+00	7.18834E-04	4.69440E-05	7.68707E-01
3.2000E+02	2.9151E+00	5.76979E-04	4.47120E-05	7.69861E-01

3.2200E+02	2.8788E+00	5.93554E-04	4.49856E-05	7.71048E-01
3.2400E+02	2.8432E+00	5.92445E-04	4.49568E-05	7.72233E-01
3.2600E+02	2.8083E+00	6.01992E-04	4.51152E-05	7.73437E-01
3.2800E+02	2.7740E+00	5.82566E-04	4.47984E-05	7.74602E-01
3.3000E+02	2.7403E+00	5.52398E-04	4.43232E-05	7.75707E-01
3.3200E+02	2.7072E+00	5.43384E-04	4.41648E-05	7.76794E-01
3.3400E+02	2.6748E+00	5.54242E-04	4.43520E-05	7.77902E-01
3.3600E+02	2.6429E+00	4.78786E-04	4.30992E-05	7.78860E-01
3.3800E+02	2.6116E+00	5.16182E-04	4.37184E-05	7.79892E-01
3.4000E+02	2.5808E+00	4.34275E-04	4.23504E-05	7.80761E-01
3.4200E+02	2.5506E+00	4.38163E-04	4.24224E-05	7.81637E-01
3.4400E+02	2.5209E+00	4.55486E-04	4.27104E-05	7.82548E-01
3.4600E+02	2.4917E+00	4.61074E-04	4.28112E-05	7.83470E-01
3.4800E+02	2.4631E+00	4.62514E-04	4.28256E-05	7.84395E-01
3.5000E+02	2.4349E+00	3.86352E-04	4.15296E-05	7.85168E-01
3.5200E+02	2.4072E+00	3.62318E-04	4.11120E-05	7.85893E-01
3.5400E+02	2.3800E+00	3.47890E-04	4.08528E-05	7.86589E-01
3.5600E+02	2.3532E+00	3.49229E-04	4.08816E-05	7.87287E-01
3.5800E+02	2.3269E+00	3.50798E-04	4.09104E-05	7.87989E-01
3.6000E+02	2.3010E+00	3.38990E-04	4.07088E-05	7.88667E-01
3.6200E+02	2.2756E+00	2.83176E-04	3.97008E-05	7.89233E-01
3.6400E+02	2.2505E+00	2.81635E-04	3.96720E-05	7.89796E-01
3.6600E+02	2.2259E+00	2.50618E-04	3.91104E-05	7.90297E-01
3.6800E+02	2.2017E+00	2.87496E-04	3.97872E-05	7.90872E-01
3.7000E+02	2.1779E+00	2.29608E-04	3.87216E-05	7.91332E-01
3.7200E+02	2.1544E+00	2.46168E-04	3.90240E-05	7.91824E-01
3.7400E+02	2.1314E+00	2.31581E-04	3.87504E-05	7.92287E-01
3.7600E+02	2.1087E+00	2.22912E-04	3.85920E-05	7.92733E-01
3.7800E+02	2.0864E+00	2.05546E-04	3.82752E-05	7.93144E-01
3.8000E+02	2.0644E+00	1.56413E-04	3.73392E-05	7.93457E-01
3.8200E+02	2.0428E+00	1.85040E-04	3.78864E-05	7.93827E-01
3.8400E+02	2.0215E+00	1.31702E-04	3.68496E-05	7.94090E-01
3.8600E+02	2.0005E+00	1.58414E-04	3.73680E-05	7.94407E-01
3.8800E+02	1.9799E+00	1.58198E-04	3.73680E-05	7.94724E-01
3.9000E+02	1.9596E+00	8.77680E-05	3.59856E-05	7.94899E-01
3.9200E+02	1.9395E+00	1.13386E-04	3.64896E-05	7.95126E-01
3.9400E+02	1.9198E+00	1.27152E-04	3.67632E-05	7.95380E-01
3.9600E+02	1.9004E+00	9.78336E-05	3.61872E-05	7.95576E-01
3.9800E+02	1.8813E+00	5.78160E-05	3.53808E-05	7.95692E-01
4.0000E+02	1.8625E+00	6.94224E-05	3.56112E-05	7.95830E-01
4.0200E+02	1.8440E+00	7.13808E-05	3.56544E-05	7.95973E-01
4.0400E+02	1.8257E+00	5.70240E-05	3.53664E-05	7.96087E-01
4.0600E+02	1.8077E+00	6.07392E-05	3.54384E-05	7.96209E-01

Water 1.9 m.f.p.

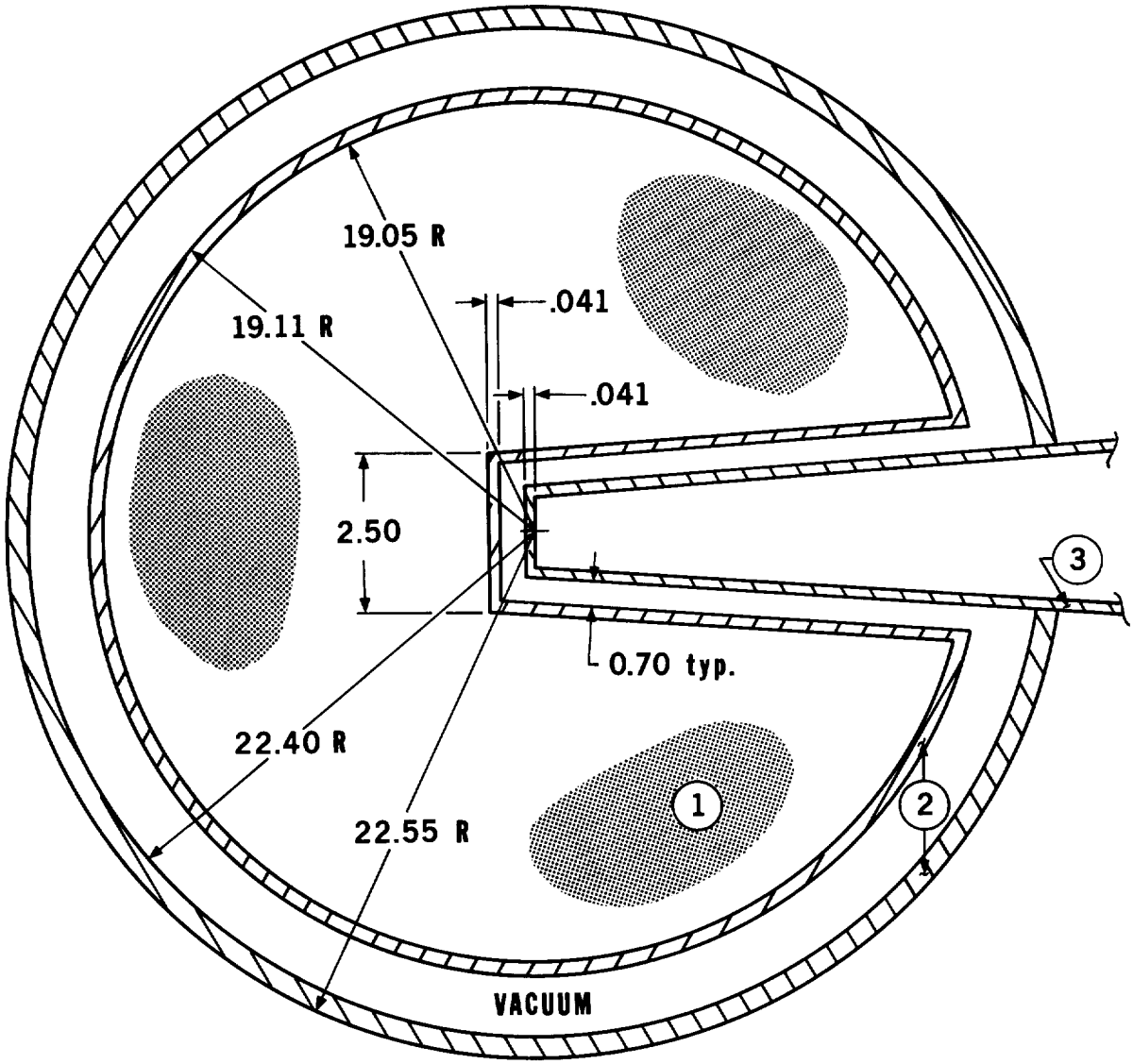

All Dimensions in Centimeters

Zone	Density (g/cm^3)	Material	Atomic %
1	1.0	H	66.7
		O	33.3
2	7.9	Fe	68.6
		Cr	20.0
		Ni	8.4
		Si	2.0
		Mn	1.0
3	I.C.T. Low Mass Ass'y and Target (See Fig.6, Sect. 1)		

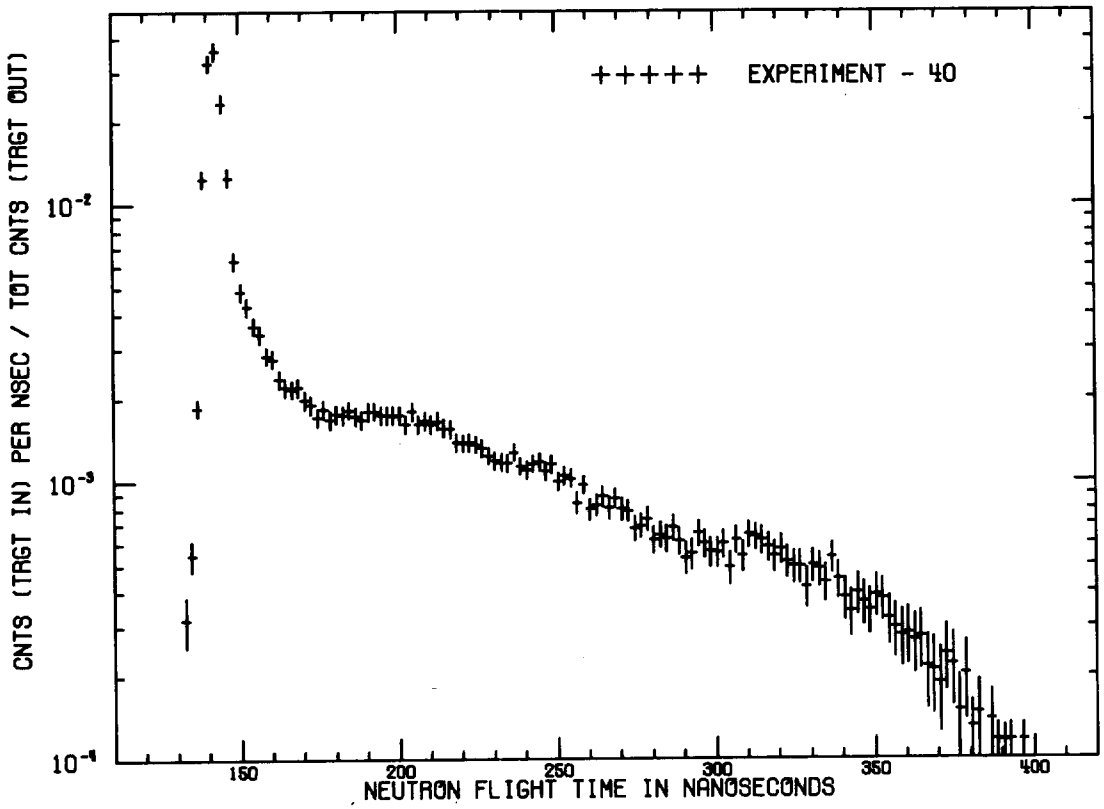

WATER - 1.9 M.F.P. - 30 DEG.

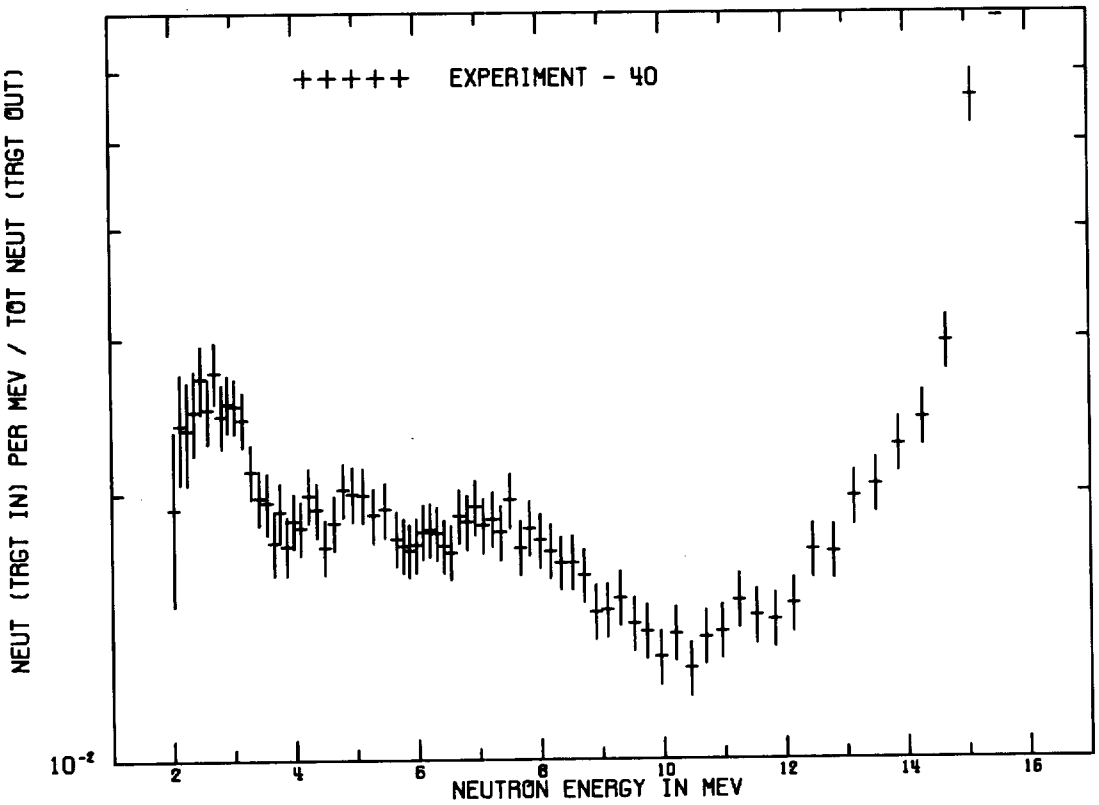

WATER - 1.9 M.F.P. - 30 DEG.

WATER - 1.9 M.F.P. - 30 DEG.
FLIGHTPATH = 754.00 CM DETECTOR = PILOT B FWHM = 5 NS

TIME(NS)	CALCULATED ENERGY(MEV)	CNT/NS/SOURCE	ERROR	INTEGRAL
1.2600E+02	1.9293E+01	1.54732E-04	6.29755E-05	3.09464E-04
1.2800E+02	1.8677E+01	3.17737E-04	6.46779E-05	9.44938E-04
1.3000E+02	1.8090E+01	5.44196E-04	6.69655E-05	2.03333E-03
1.3200E+02	1.7531E+01	1.85341E-03	7.88956E-05	5.74015E-03
1.3400E+02	1.6997E+01	1.24219E-02	1.42416E-04	3.05840E-02
1.3600E+02	1.6488E+01	3.26339E-02	2.17176E-04	9.58519E-02
1.3800E+02	1.6001E+01	3.60090E-02	2.27270E-04	1.67870E-01
1.4000E+02	1.5536E+01	2.33643E-02	1.86639E-04	2.14598E-01
1.4200E+02	1.5091E+01	1.25537E-02	1.43028E-04	2.39706E-01
1.4400E+02	1.4665E+01	6.25676E-03	1.09911E-04	2.52219E-01
1.4600E+02	1.4257E+01	4.84413E-03	1.01013E-04	2.61908E-01
1.4800E+02	1.3866E+01	4.27388E-03	9.71831E-05	2.70455E-01
1.5000E+02	1.3490E+01	3.64892E-03	9.28074E-05	2.77753E-01
1.5200E+02	1.3130E+01	3.39666E-03	9.09853E-05	2.84546E-01
1.5400E+02	1.2784E+01	2.84651E-03	8.68623E-05	2.90239E-01
1.5600E+02	1.2452E+01	2.77223E-03	8.62904E-05	2.95784E-01
1.5800E+02	1.2133E+01	2.33960E-03	8.28989E-05	3.00463E-01
1.6000E+02	1.1826E+01	2.18991E-03	8.16886E-05	3.04843E-01
1.6200E+02	1.1530E+01	2.15475E-03	8.13960E-05	3.09152E-01
1.6400E+02	1.1246E+01	2.18845E-03	8.16753E-05	3.13529E-01
1.6600E+02	1.0972E+01	1.97114E-03	7.98798E-05	3.17472E-01
1.6800E+02	1.0707E+01	1.89649E-03	7.92547E-05	3.21265E-01
1.7000E+02	1.0453E+01	1.70690E-03	7.76537E-05	3.24678E-01
1.7200E+02	1.0207E+01	1.82808E-03	7.86328E-05	3.28335E-01
1.7400E+02	9.9702E+00	1.67940E-03	7.74193E-05	3.31693E-01
1.7600E+02	9.7413E+00	1.75370E-03	7.80577E-05	3.35201E-01
1.7800E+02	9.5203E+00	1.74271E-03	7.79646E-05	3.38686E-01
1.8000E+02	9.3068E+00	1.81766E-03	7.86030E-05	3.42321E-01
1.8200E+02	9.1004E+00	1.72093E-03	7.77784E-05	3.45763E-01
1.8400E+02	8.9009E+00	1.67196E-03	7.73528E-05	3.49107E-01
1.8600E+02	8.7078E+00	1.79053E-03	7.83636E-05	3.52688E-01
1.8800E+02	8.5210E+00	1.80009E-03	7.84434E-05	3.56288E-01
1.9000E+02	8.3402E+00	1.74459E-03	7.79779E-05	3.59778E-01
1.9200E+02	8.1651E+00	1.74323E-03	7.79646E-05	3.63264E-01
1.9400E+02	7.9954E+00	1.73451E-03	7.78848E-05	3.66733E-01
1.9600E+02	7.8311E+00	1.73964E-03	7.79380E-05	3.70212E-01
1.9800E+02	7.6717E+00	1.61122E-03	7.68341E-05	3.73435E-01
2.0000E+02	7.5172E+00	1.78822E-03	7.83503E-05	3.77011E-01
2.0200E+02	7.3674E+00	1.61370E-03	7.68474E-05	3.80239E-01
2.0400E+02	7.2219E+00	1.65973E-03	7.72464E-05	3.83558E-01
2.0600E+02	7.0808E+00	1.60864E-03	7.68075E-05	3.86775E-01
2.0800E+02	6.9438E+00	1.65436E-03	7.72065E-05	3.90084E-01
2.1000E+02	6.8107E+00	1.56189E-03	7.64085E-05	3.93208E-01
2.1200E+02	6.6815E+00	1.55369E-03	7.63287E-05	3.96315E-01
2.1400E+02	6.5559E+00	1.38531E-03	7.48524E-05	3.99086E-01

2.1600E+02	6.4338E+00	1.37511E-03	7.47593E-05	4.01836E-01
2.1800E+02	6.3151E+00	1.38597E-03	7.48524E-05	4.04608E-01
2.2000E+02	6.1996E+00	1.36277E-03	7.46529E-05	4.07334E-01
2.2200E+02	6.0874E+00	1.31996E-03	7.42672E-05	4.09974E-01
2.2400E+02	5.9781E+00	1.24033E-03	7.35490E-05	4.12454E-01
2.2600E+02	5.8718E+00	1.18907E-03	7.30835E-05	4.14832E-01
2.2800E+02	5.7683E+00	1.17274E-03	7.29372E-05	4.17178E-01
2.3000E+02	5.6675E+00	1.16161E-03	7.28308E-05	4.19501E-01
2.3200E+02	5.5693E+00	1.27554E-03	7.38682E-05	4.22052E-01
2.3400E+02	5.4737E+00	1.13590E-03	7.26047E-05	4.24324E-01
2.3600E+02	5.3805E+00	1.09899E-03	7.22589E-05	4.26522E-01
2.3800E+02	5.2897E+00	1.15947E-03	7.28175E-05	4.28841E-01
2.4000E+02	5.2012E+00	1.17323E-03	7.29372E-05	4.31187E-01
2.4200E+02	5.1149E+00	1.08931E-03	7.21658E-05	4.33366E-01
2.4400E+02	5.0307E+00	1.15694E-03	7.27909E-05	4.35680E-01
2.4600E+02	4.9486E+00	9.99987E-04	7.13412E-05	4.37680E-01
2.4800E+02	4.8685E+00	1.04700E-03	7.17801E-05	4.39774E-01
2.5000E+02	4.7903E+00	1.02560E-03	7.15806E-05	4.41825E-01
2.5200E+02	4.7140E+00	8.39097E-04	6.98250E-05	4.43503E-01
2.5400E+02	4.6395E+00	9.69583E-04	7.10619E-05	4.45442E-01
2.5600E+02	4.5667E+00	7.94170E-04	6.93994E-05	4.47031E-01
2.5800E+02	4.4957E+00	8.19852E-04	6.96388E-05	4.48670E-01
2.6000E+02	4.4263E+00	8.82162E-04	7.02373E-05	4.50435E-01
2.6200E+02	4.3585E+00	8.02841E-04	6.94792E-05	4.52040E-01
2.6400E+02	4.2923E+00	8.70538E-04	7.01309E-05	4.53782E-01
2.6600E+02	4.2276E+00	7.95779E-04	6.94127E-05	4.55373E-01
2.6800E+02	4.1643E+00	7.84860E-04	6.93063E-05	4.56943E-01
2.7000E+02	4.1024E+00	6.78553E-04	6.82822E-05	4.58300E-01
2.7200E+02	4.0419E+00	6.92598E-04	6.84152E-05	4.59685E-01
2.7400E+02	3.9827E+00	7.32750E-04	6.88142E-05	4.61151E-01
2.7600E+02	3.9249E+00	6.16495E-04	6.76704E-05	4.62384E-01
2.7800E+02	3.8683E+00	6.41446E-04	6.79231E-05	4.63666E-01
2.8000E+02	3.8129E+00	6.21961E-04	6.77236E-05	4.64910E-01
2.8200E+02	3.7586E+00	6.80135E-04	6.82955E-05	4.66271E-01
2.8400E+02	3.7056E+00	6.10869E-04	6.76172E-05	4.67492E-01
2.8600E+02	3.6536E+00	5.28409E-04	6.68059E-05	4.68549E-01
2.8800E+02	3.6028E+00	5.48731E-04	6.70054E-05	4.69647E-01
2.9000E+02	3.5530E+00	6.50756E-04	6.80162E-05	4.70948E-01
2.9200E+02	3.5042E+00	5.96212E-04	6.74709E-05	4.72141E-01
2.9400E+02	3.4564E+00	5.56765E-04	6.70852E-05	4.73254E-01
2.9600E+02	3.4096E+00	5.55794E-04	6.70719E-05	4.74366E-01
2.9800E+02	3.3638E+00	5.97090E-04	6.74842E-05	4.75560E-01
3.0000E+02	3.3188E+00	4.89360E-04	6.64202E-05	4.76539E-01
3.0200E+02	3.2748E+00	6.15391E-04	6.76704E-05	4.77769E-01
3.0400E+02	3.2316E+00	5.36708E-04	6.68857E-05	4.78843E-01
3.0600E+02	3.1893E+00	6.45077E-04	6.79497E-05	4.80133E-01
3.0800E+02	3.1478E+00	6.29994E-04	6.78034E-05	4.81393E-01
3.1000E+02	3.1071E+00	6.13117E-04	6.76438E-05	4.82619E-01

3.1200E+02	3.0672E+00	5.78204E-04	6.72980E-05	4.83776E-01
3.1400E+02	3.0281E+00	5.36655E-04	6.68857E-05	4.84849E-01
3.1600E+02	2.9897E+00	5.69227E-04	6.72049E-05	4.85987E-01
3.1800E+02	2.9520E+00	5.13500E-04	6.66596E-05	4.87014E-01
3.2000E+02	2.9151E+00	4.94600E-04	6.64601E-05	4.88004E-01
3.2200E+02	2.8788E+00	4.93656E-04	6.64601E-05	4.88991E-01
3.2400E+02	2.8432E+00	4.17221E-04	6.56887E-05	4.89825E-01
3.2600E+02	2.8083E+00	4.98524E-04	6.65000E-05	4.90822E-01
3.2800E+02	2.7740E+00	4.83601E-04	6.63537E-05	4.91790E-01
3.3000E+02	2.7403E+00	4.33008E-04	6.58483E-05	4.92656E-01
3.3200E+02	2.7072E+00	5.32652E-04	6.68458E-05	4.93721E-01
3.3400E+02	2.6748E+00	4.43621E-04	6.59547E-05	4.94608E-01
3.3600E+02	2.6429E+00	3.79728E-04	6.53030E-05	4.95368E-01
3.3800E+02	2.6116E+00	3.39230E-04	6.48907E-05	4.96046E-01
3.4000E+02	2.5808E+00	3.95795E-04	6.54759E-05	4.96838E-01
3.4200E+02	2.5506E+00	3.68343E-04	6.51966E-05	4.97574E-01
3.4400E+02	2.5209E+00	3.44736E-04	6.49439E-05	4.98264E-01
3.4600E+02	2.4917E+00	3.90488E-04	6.54227E-05	4.99045E-01
3.4800E+02	2.4631E+00	3.79210E-04	6.53030E-05	4.99803E-01
3.5000E+02	2.4349E+00	3.21461E-04	6.47045E-05	5.00446E-01
3.5200E+02	2.4072E+00	2.97188E-04	6.44651E-05	5.01040E-01
3.5400E+02	2.3800E+00	2.79074E-04	6.42789E-05	5.01599E-01
3.5600E+02	2.3532E+00	2.84327E-04	6.43321E-05	5.02167E-01
3.5800E+02	2.3269E+00	2.67503E-04	6.41592E-05	5.02702E-01
3.6000E+02	2.3010E+00	2.75044E-04	6.42257E-05	5.03252E-01
3.6200E+02	2.2756E+00	2.14369E-04	6.36006E-05	5.03681E-01
3.6400E+02	2.2505E+00	2.08491E-04	6.35341E-05	5.04098E-01
3.6600E+02	2.2259E+00	1.87902E-04	6.33213E-05	5.04474E-01
3.6800E+02	2.2017E+00	2.39081E-04	6.38533E-05	5.04952E-01
3.7000E+02	2.1779E+00	2.18971E-04	6.36538E-05	5.05390E-01
3.7200E+02	2.1544E+00	1.49332E-04	6.29223E-05	5.05689E-01
3.7400E+02	2.1314E+00	2.02333E-04	6.34809E-05	5.06093E-01
3.7600E+02	2.1087E+00	1.30712E-04	6.27228E-05	5.06355E-01
3.7800E+02	2.0864E+00	1.46100E-04	6.28824E-05	5.06647E-01
3.8000E+02	2.0644E+00	9.92978E-05	6.23903E-05	5.06846E-01
3.8200E+02	2.0428E+00	1.37881E-04	6.28026E-05	5.07121E-01
3.8400E+02	2.0215E+00	1.16721E-04	6.25765E-05	5.07355E-01
3.8600E+02	2.0005E+00	1.15298E-04	6.25632E-05	5.07585E-01
3.8800E+02	1.9799E+00	1.16495E-04	6.25632E-05	5.07818E-01
3.9000E+02	1.9596E+00	8.54126E-05	6.22440E-05	5.07989E-01
3.9200E+02	1.9395E+00	1.16734E-04	6.25765E-05	5.08223E-01

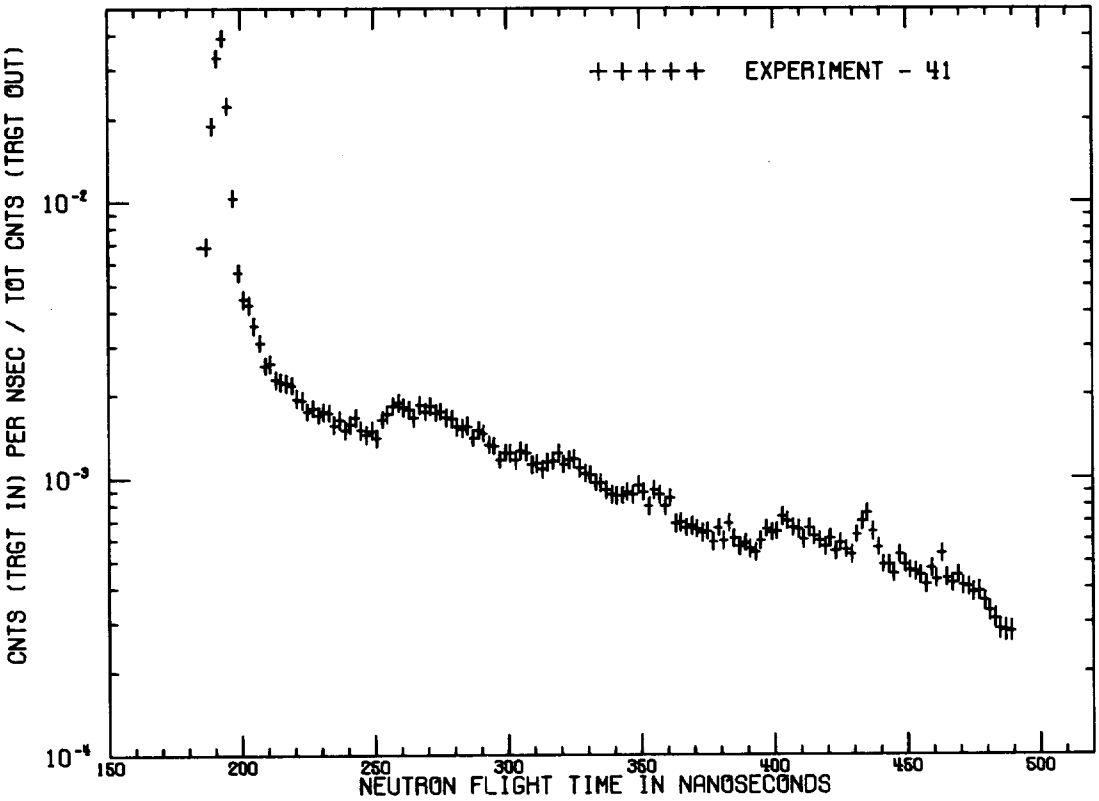

WATER - 1.9 M.F.P. - 120 DEG.

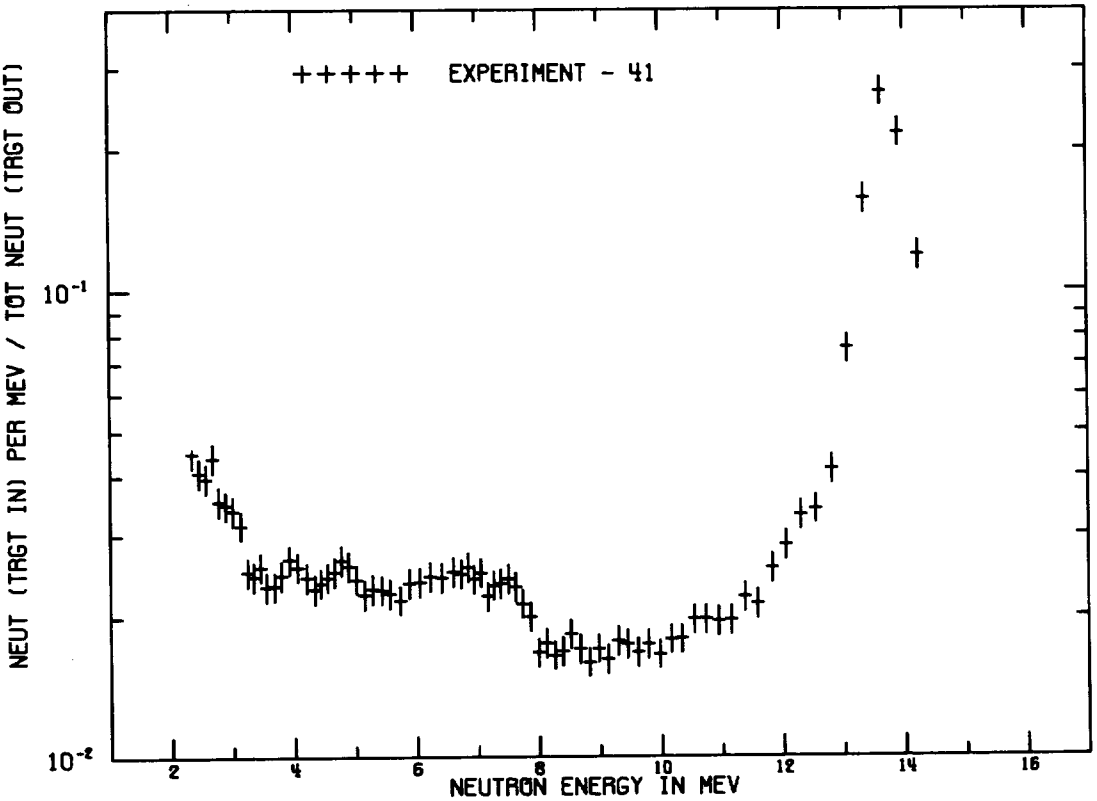

WATER - 1.9 M.F.P. - 120 DEG.

WATER - 1.9 M.F.P. - 120 DEG.
FLIGHTPATH = 975.40 CM DETECTOR = NE213 FWHM = 3 NS

TIME(NS)	CALCULATED ENERGY(MEV)	CNT/NS/SOURCE	ERROR	INTEGRAL
1.8500E+02	1.4874E+01	6.81000E-04	3.78350E-05	1.36200E-03
1.8700E+02	1.4550E+01	6.86000E-03	1.18450E-04	1.50820E-02
1.8900E+02	1.4237E+01	1.87750E-02	1.95750E-04	5.26320E-02
1.9100E+02	1.3934E+01	3.30800E-02	2.59750E-04	1.18792E-01
1.9300E+02	1.3640E+01	3.91050E-02	2.82450E-04	1.97002E-01
1.9500E+02	1.3356E+01	2.22250E-02	2.12950E-04	2.41452E-01
1.9700E+02	1.3080E+01	1.03350E-02	1.45300E-04	2.62122E-01
1.9900E+02	1.2813E+01	5.53500E-03	1.06450E-04	2.73192E-01
2.0100E+02	1.2554E+01	4.43950E-03	9.53500E-05	2.82071E-01
2.0300E+02	1.2303E+01	4.21200E-03	9.29000E-05	2.90495E-01
2.0500E+02	1.2060E+01	3.54650E-03	8.53000E-05	2.97588E-01
2.0700E+02	1.1824E+01	3.09700E-03	7.97500E-05	3.03782E-01
2.0900E+02	1.1594E+01	2.55300E-03	7.24500E-05	3.08888E-01
2.1100E+02	1.1371E+01	2.58750E-03	7.29000E-05	3.14063E-01
2.1300E+02	1.1155E+01	2.27100E-03	6.83500E-05	3.18605E-01
2.1500E+02	1.0945E+01	2.22350E-03	6.76500E-05	3.23052E-01
2.1700E+02	1.0741E+01	2.20650E-03	6.74000E-05	3.27465E-01
2.1900E+02	1.0542E+01	2.16900E-03	6.68000E-05	3.31803E-01
2.2100E+02	1.0349E+01	1.93800E-03	6.32000E-05	3.35679E-01
2.2300E+02	1.0161E+01	1.90400E-03	6.26500E-05	3.39487E-01
2.2500E+02	9.9785E+00	1.73850E-03	5.99000E-05	3.42964E-01
2.2700E+02	9.8007E+00	1.79300E-03	6.08000E-05	3.46550E-01
2.2900E+02	9.6276E+00	1.69150E-03	5.91000E-05	3.49933E-01
2.3100E+02	9.4591E+00	1.72950E-03	5.97500E-05	3.53392E-01
2.3300E+02	9.2950E+00	1.72600E-03	5.97000E-05	3.56844E-01
2.3500E+02	9.1351E+00	1.55450E-03	5.66500E-05	3.59953E-01
2.3700E+02	8.9794E+00	1.61600E-03	5.77500E-05	3.63185E-01
2.3900E+02	8.8276E+00	1.48650E-03	5.54500E-05	3.66158E-01
2.4100E+02	8.6797E+00	1.55900E-03	5.67500E-05	3.69276E-01
2.4300E+02	8.5355E+00	1.64850E-03	5.83500E-05	3.72573E-01
2.4500E+02	8.3948E+00	1.48600E-03	5.54500E-05	3.75545E-01
2.4700E+02	8.2576E+00	1.43100E-03	5.44000E-05	3.78407E-01
2.4900E+02	8.1238E+00	1.48200E-03	5.53500E-05	3.81371E-01
2.5100E+02	7.9932E+00	1.38700E-03	5.35500E-05	3.84145E-01
2.5300E+02	7.8657E+00	1.62900E-03	5.80000E-05	3.87403E-01
2.5500E+02	7.7413E+00	1.70100E-03	5.92500E-05	3.90805E-01
2.5700E+02	7.6198E+00	1.82700E-03	6.14000E-05	3.94459E-01
2.5900E+02	7.5012E+00	1.87300E-03	6.21500E-05	3.98205E-01
2.6100E+02	7.3853E+00	1.79850E-03	6.09000E-05	4.01802E-01
2.6300E+02	7.2721E+00	1.76150E-03	6.03000E-05	4.05325E-01
2.6500E+02	7.1615E+00	1.65150E-03	5.84000E-05	4.08628E-01
2.6700E+02	7.0534E+00	1.83050E-03	6.14500E-05	4.12289E-01
2.6900E+02	6.9478E+00	1.73900E-03	5.99000E-05	4.15767E-01
2.7100E+02	6.8445E+00	1.81450E-03	6.11500E-05	4.19396E-01
2.7300E+02	6.7435E+00	1.72450E-03	5.96500E-05	4.22845E-01

2.7500E+02	6.6447E+00	1.74300E-03	5.99500E-05	4.26331E-01
2.7700E+02	6.5481E+00	1.65050E-03	5.83500E-05	4.29632E-01
2.7900E+02	6.4536E+00	1.63600E-03	5.81000E-05	4.32904E-01
2.8100E+02	6.3611E+00	1.52650E-03	5.61500E-05	4.35957E-01
2.8300E+02	6.2706E+00	1.51100E-03	5.59000E-05	4.38979E-01
2.8500E+02	6.1821E+00	1.53950E-03	5.64000E-05	4.42058E-01
2.8700E+02	6.0954E+00	1.39800E-03	5.38000E-05	4.44854E-01
2.8900E+02	6.0105E+00	1.49000E-03	5.55000E-05	4.47834E-01
2.9100E+02	5.9274E+00	1.45150E-03	5.48000E-05	4.50737E-01
2.9300E+02	5.8460E+00	1.32050E-03	5.23000E-05	4.53378E-01
2.9500E+02	5.7662E+00	1.30550E-03	5.20000E-05	4.55989E-01
2.9700E+02	5.6881E+00	1.16450E-03	4.91550E-05	4.58318E-01
2.9900E+02	5.6116E+00	1.23400E-03	5.06000E-05	4.60786E-01
3.0100E+02	5.5366E+00	1.22500E-03	5.04000E-05	4.63236E-01
3.0300E+02	5.4631E+00	1.16000E-03	4.90700E-05	4.65556E-01
3.0500E+02	5.3911E+00	1.25300E-03	5.09500E-05	4.68062E-01
3.0700E+02	5.3205E+00	1.23100E-03	5.05000E-05	4.70524E-01
3.0900E+02	5.2513E+00	1.11550E-03	4.81300E-05	4.72755E-01
3.1100E+02	5.1834E+00	1.12400E-03	4.83150E-05	4.75003E-01
3.1300E+02	5.1168E+00	1.07450E-03	4.72600E-05	4.77152E-01
3.1500E+02	5.0515E+00	1.13450E-03	4.85400E-05	4.79421E-01
3.1700E+02	4.9875E+00	1.15200E-03	4.89000E-05	4.81725E-01
3.1900E+02	4.9246E+00	1.22900E-03	5.05000E-05	4.84183E-01
3.2100E+02	4.8630E+00	1.11950E-03	4.82150E-05	4.86422E-01
3.2300E+02	4.8025E+00	1.16100E-03	4.90850E-05	4.88744E-01
3.2500E+02	4.7431E+00	1.16750E-03	4.92250E-05	4.91079E-01
3.2700E+02	4.6848E+00	1.08200E-03	4.74150E-05	4.93243E-01
3.2900E+02	4.6276E+00	1.03700E-03	4.64400E-05	4.95317E-01
3.3100E+02	4.5715E+00	1.02650E-03	4.62150E-05	4.97370E-01
3.3300E+02	4.5163E+00	9.62500E-04	4.47800E-05	4.99295E-01
3.3500E+02	4.4622E+00	9.54500E-04	4.45950E-05	5.01204E-01
3.3700E+02	4.4090E+00	9.01000E-04	4.33500E-05	5.03006E-01
3.3900E+02	4.3568E+00	8.69500E-04	4.26100E-05	5.04745E-01
3.4100E+02	4.3055E+00	8.60000E-04	4.23800E-05	5.06465E-01
3.4300E+02	4.2551E+00	8.66000E-04	4.25250E-05	5.08197E-01
3.4500E+02	4.2055E+00	8.90000E-04	4.30950E-05	5.09977E-01
3.4700E+02	4.1569E+00	8.68500E-04	4.25850E-05	5.11714E-01
3.4900E+02	4.1091E+00	9.42000E-04	4.43050E-05	5.13598E-01
3.5100E+02	4.0621E+00	8.90500E-04	4.31100E-05	5.15379E-01
3.5300E+02	4.0159E+00	7.91500E-04	4.06950E-05	5.16962E-01
3.5500E+02	3.9705E+00	9.01500E-04	4.33650E-05	5.18765E-01
3.5700E+02	3.9258E+00	8.67500E-04	4.25600E-05	5.20500E-01
3.5900E+02	3.8819E+00	7.91500E-04	4.07000E-05	5.22083E-01
3.6100E+02	3.8388E+00	8.47500E-04	4.20800E-05	5.23778E-01
3.6300E+02	3.7963E+00	6.84000E-04	3.79100E-05	5.25146E-01
3.6500E+02	3.7546E+00	6.92500E-04	3.81300E-05	5.26531E-01
3.6700E+02	3.7135E+00	6.61500E-04	3.72950E-05	5.27854E-01
3.6900E+02	3.6732E+00	6.71000E-04	3.75650E-05	5.29196E-01

3.7100E+02	3.6334E+00	6.55500E-04	3.71350E-05	5.30507E-01
3.7300E+02	3.5944E+00	6.34000E-04	3.65350E-05	5.31775E-01
3.7500E+02	3.5559E+00	6.42000E-04	3.67550E-05	5.33059E-01
3.7700E+02	3.5181E+00	5.88000E-04	3.52350E-05	5.34235E-01
3.7900E+02	3.4808E+00	6.62500E-04	3.73250E-05	5.35560E-01
3.8100E+02	3.4442E+00	5.93000E-04	3.53750E-05	5.36746E-01
3.8300E+02	3.4081E+00	6.88500E-04	3.80250E-05	5.38123E-01
3.8500E+02	3.3726E+00	6.03000E-04	3.56700E-05	5.39329E-01
3.8700E+02	3.3376E+00	5.63500E-04	3.45150E-05	5.40456E-01
3.8900E+02	3.3032E+00	5.85000E-04	3.51500E-05	5.41626E-01
3.9100E+02	3.2693E+00	5.55500E-04	3.42750E-05	5.42737E-01
3.9300E+02	3.2360E+00	5.39500E-04	3.38050E-05	5.43816E-01
3.9500E+02	3.2031E+00	5.93500E-04	3.53850E-05	5.45003E-01
3.9700E+02	3.1708E+00	6.54500E-04	3.71150E-05	5.46312E-01
3.9900E+02	3.1389E+00	6.36000E-04	3.66000E-05	5.47584E-01
4. 100E+02	3.1075E+00	6.43500E-04	3.68050E-05	5.48871E-01
4.0300E+02	3.0766E+00	7.25500E-04	3.90050E-05	5.50322E-01
4.0500E+02	3.0461E+00	7.01500E-04	3.83750E-05	5.51725E-01
4.0700E+02	3.0161E+00	6.60500E-04	3.72650E-05	5.53046E-01
4.0900E+02	2.9866E+00	6.53500E-04	3.70750E-05	5.54353E-01
4.1100E+02	2.9574E+00	6.00000E-04	3.55750E-05	5.55553E-01
4.1300E+02	2.9287E+00	6.60000E-04	3.72550E-05	5.56873E-01
4.1500E+02	2.9004E+00	6.17000E-04	3.60650E-05	5.58107E-01
4.1700E+02	2.8726E+00	5.95000E-04	3.54350E-05	5.59297E-01
4.1900E+02	2.8451E+00	5.63500E-04	3.45100E-05	5.60424E-01
4.2100E+02	2.8180E+00	6.05500E-04	3.57400E-05	5.61635E-01
4.2300E+02	2.7913E+00	5.43500E-04	3.39200E-05	5.62722E-01
4.2500E+02	2.7650E+00	5.84000E-04	3.51200E-05	5.63890E-01
4.2700E+02	2.7390E+00	5.52000E-04	3.41700E-05	5.64994E-01
4.2900E+02	2.7134E+00	5.28500E-04	3.34650E-05	5.66051E-01
4.3100E+02	2.6882E+00	6.23500E-04	3.62450E-05	5.67298E-01
4.3300E+02	2.6633E+00	6.98500E-04	3.82950E-05	5.68695E-01
4.3500E+02	2.6388E+00	7.44500E-04	3.95000E-05	5.70184E-01
4.3700E+02	2.6146E+00	6.41500E-04	3.67500E-05	5.71467E-01
4.3900E+02	2.5907E+00	5.62000E-04	3.44800E-05	5.72591E-01
4.4100E+02	2.5672E+00	4.86300E-04	3.21550E-05	5.73564E-01
4.4300E+02	2.5439E+00	4.83650E-04	3.20700E-05	5.74531E-01
4.4500E+02	2.5210E+00	4.51750E-04	3.10400E-05	5.75434E-01
4.4700E+02	2.4984E+00	5.27000E-04	3.34200E-05	5.76488E-01
4.4900E+02	2.4761E+00	4.87800E-04	3.22050E-05	5.77464E-01
4.5100E+02	2.4541E+00	4.63600E-04	3.14300E-05	5.78391E-01
4.5300E+02	2.4324E+00	4.58800E-04	3.12750E-05	5.79309E-01
4.5500E+02	2.4110E+00	4.44700E-04	3.08100E-05	5.80198E-01
4.5700E+02	2.3899E+00	4.12450E-04	2.97250E-05	5.81023E-01
4.5900E+02	2.3690E+00	4.72200E-04	3.17050E-05	5.81967E-01
4.6100E+02	2.3484E+00	4.30450E-04	3.03350E-05	5.82828E-01
4.6300E+02	2.3281E+00	5.33000E-04	3.36050E-05	5.83894E-01
4.6500E+02	2.3080E+00	4.34850E-04	3.04800E-05	5.84764E-01

4.6700E+02	2.2882E+00	4.15550E-04	2.98300E-05	5.85595E-01
4.6900E+02	2.2687E+00	4.47200E-04	3.08950E-05	5.86490E-01
4.7100E+02	2.2494E+00	4.08050E-04	2.95700E-05	5.87306E-01
4.7300E+02	2.2304E+00	4.04900E-04	2.94650E-05	5.88115E-01
4.7500E+02	2.2115E+00	3.87650E-04	2.88600E-05	5.88891E-01
4.7700E+02	2.1930E+00	3.90400E-04	2.89550E-05	5.89672E-01
4.7900E+02	2.1746E+00	3.59250E-04	2.78400E-05	5.90390E-01
4.8100E+02	2.1565E+00	3.31550E-04	2.68050E-05	5.91053E-01
4.8300E+02	2.1386E+00	3.10350E-04	2.59900E-05	5.91674E-01
4.8500E+02	2.1210E+00	2.84950E-04	2.49700E-05	5.92244E-01
4.8700E+02	2.1035E+00	2.81550E-04	2.48300E-05	5.92807E-01
4.8900E+02	2.0863E+00	2.79300E-04	2.47400E-05	5.93365E-01

Heavy Water 1.2 m. f. p.

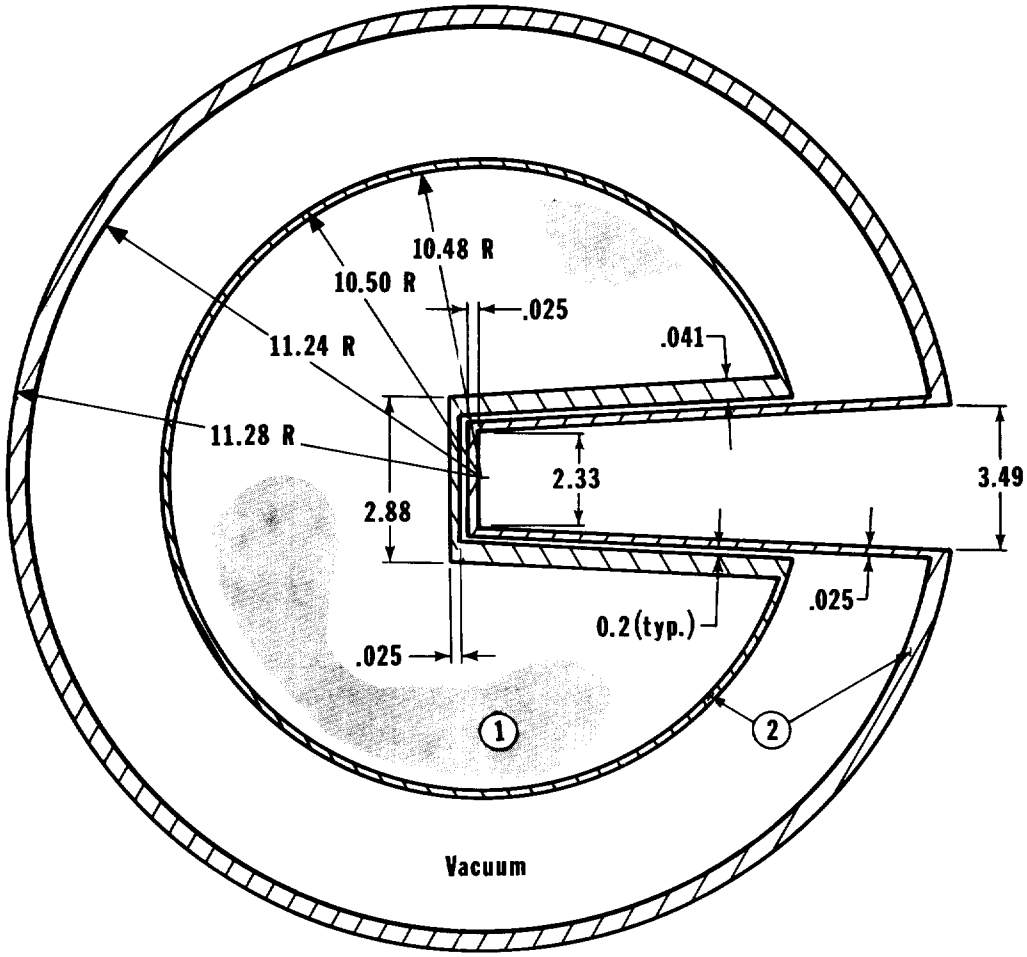

All Dimensions in Centimeters

Zone	Density (g/cm³)	Material	Atomic %
1	1.105	D	66.7
		O	33.3
2	7.9	Fe	68.6
		Cr	20.0
		Ni	8.4
		Si	2.0
		Mn	1.0

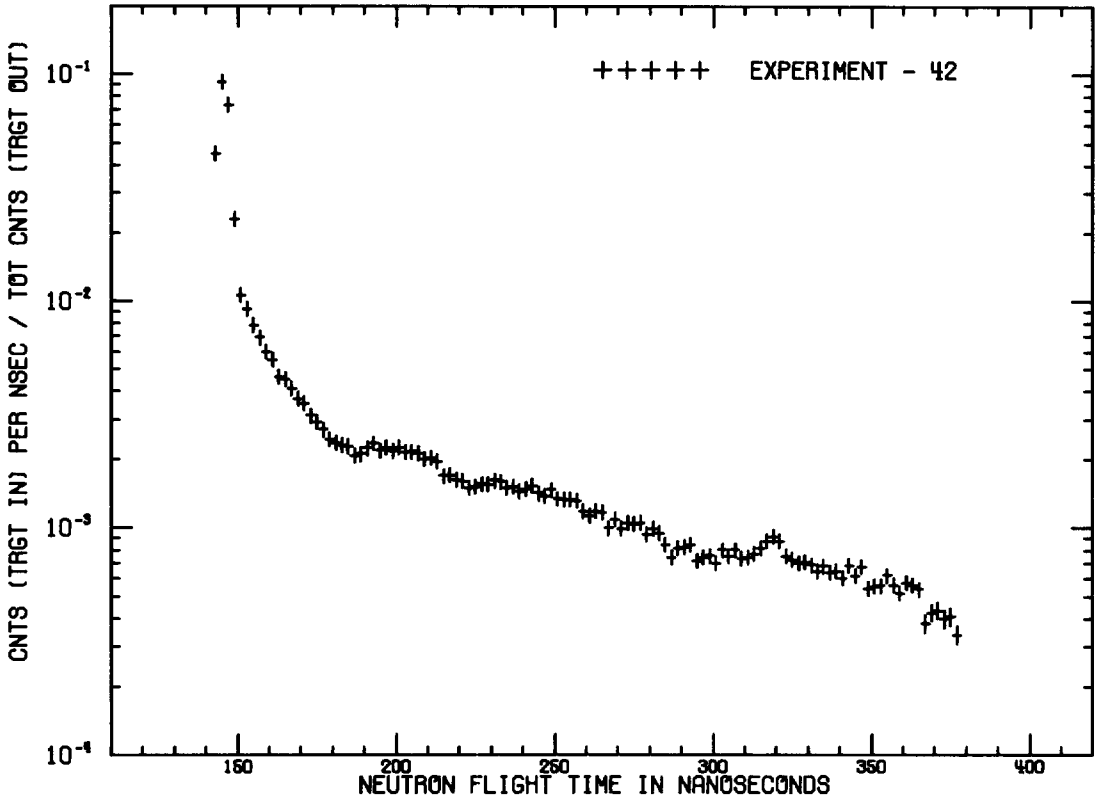

HEAVY WATER - 1.2 M.F.P. - 30 DEG.

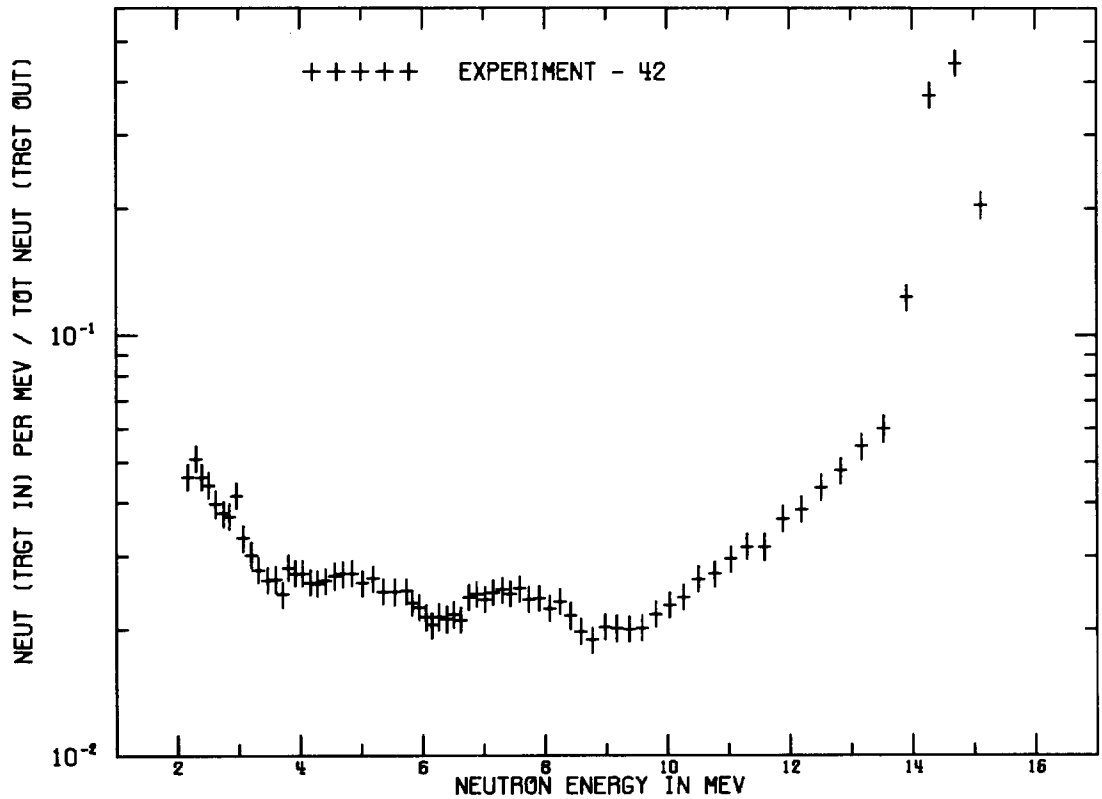

HEAVY WATER - 1.2 M.F.P. - 30 DEG.

HEAVY WATER - 1.2 M.F.P. - 30 DEG.
FLIGHTPATH = 765.20 CM DETECTOR = PILOT B FWHM = 5 NS

TIME(NS)	CALCULATED ENERGY(MEV)	CNT/NS/SOURCE	ERROR	INTEGRAL
1.4200E+02	1.5554E+01	1.02687E-02	1.25318E-04	2.05374E-02
1.4400E+02	1.5115E+01	4.50061E-02	2.58397E-04	1.10550E-01
1.4600E+02	1.4694E+01	9.25500E-02	3.69676E-04	2.95649E-01
1.4800E+02	1.4290E+01	7.33985E-02	3.29398E-04	4.42447E-01
1.5000E+02	1.3903E+01	2.28979E-02	1.85117E-04	4.88242E-01
1.5200E+02	1.3532E+01	1.05952E-02	1.27214E-04	5.09433E-01
1.5400E+02	1.3175E+01	9.24105E-03	1.19143E-04	5.27915E-01
1.5600E+02	1.2833E+01	7.81137E-03	1.09971E-04	5.43538E-01
1.5800E+02	1.2503E+01	6.91960E-03	1.03841E-04	5.57377E-01
1.6000E+02	1.2187E+01	5.95729E-03	9.67848E-05	5.69291E-01
1.6200E+02	1.1882E+01	5.52032E-03	9.34038E-05	5.80332E-01
1.6400E+02	1.1589E+01	4.61501E-03	8.59803E-05	5.89562E-01
1.6600E+02	1.1306E+01	4.50615E-03	8.50542E-05	5.98574E-01
1.6800E+02	1.1034E+01	4.12141E-03	8.16585E-05	6.06817E-01
1.7000E+02	1.0771E+01	3.71221E-03	7.78953E-05	6.14241E-01
1.7200E+02	1.0518E+01	3.52459E-03	7.61019E-05	6.21291E-01
1.7400E+02	1.0273E+01	3.11565E-03	7.20447E-05	6.27522E-01
1.7600E+02	1.0038E+01	2.91973E-03	7.00161E-05	6.33361E-01
1.7800E+02	9.8097E+00	2.70955E-03	6.77670E-05	6.38781E-01
1.8000E+02	9.5896E+00	2.44559E-03	6.48417E-05	6.43672E-01
1.8200E+02	9.3769E+00	2.36729E-03	6.39450E-05	6.48406E-01
1.8400E+02	9.1712E+00	2.32331E-03	6.34452E-05	6.53053E-01
1.8600E+02	8.9722E+00	2.29513E-03	6.31218E-05	6.57643E-01
1.8800E+02	8.7796E+00	2.07798E-03	6.05346E-05	6.61799E-01
1.9000E+02	8.5932E+00	2.11795E-03	6.10197E-05	6.66035E-01
1.9200E+02	8.4127E+00	2.24588E-03	6.25338E-05	6.70527E-01
1.9400E+02	8.2379E+00	2.35748E-03	6.38421E-05	6.75242E-01
1.9600E+02	8.0685E+00	2.19259E-03	6.19164E-05	6.79627E-01
1.9800E+02	7.9042E+00	2.25626E-03	6.26661E-05	6.84139E-01
2.0000E+02	7.7450E+00	2.17626E-03	6.17106E-05	6.88492E-01
2.0200E+02	7.5905E+00	2.25804E-03	6.26808E-05	6.93008E-01
2.0400E+02	7.4407E+00	2.15511E-03	6.14607E-05	6.97318E-01
2.0600E+02	7.2952E+00	2.17098E-03	6.16518E-05	7.01660E-01
2.0800E+02	7.1540E+00	2.12719E-03	6.11226E-05	7.05915E-01
2.1000E+02	7.0169E+00	2.00936E-03	5.96967E-05	7.09933E-01
2.1200E+02	6.8836E+00	2.03225E-03	5.99760E-05	7.13998E-01
2.1400E+02	6.7542E+00	1.95851E-03	5.90646E-05	7.17915E-01
2.1600E+02	6.6284E+00	1.69741E-03	5.57277E-05	7.21310E-01
2.1800E+02	6.5060E+00	1.70589E-03	5.58306E-05	7.24721E-01
2.2000E+02	6.3871E+00	1.62476E-03	5.47575E-05	7.27971E-01
2.2200E+02	6.2714E+00	1.60461E-03	5.44782E-05	7.31180E-01
2.2400E+02	6.1588E+00	1.49327E-03	5.29641E-05	7.34167E-01
2.2600E+02	6.0492E+00	1.51823E-03	5.33022E-05	7.37203E-01
2.2800E+02	5.9425E+00	1.56170E-03	5.39049E-05	7.40327E-01
2.3000E+02	5.8387E+00	1.55788E-03	5.38461E-05	7.43442E-01

2.3200E+02	5.7375E+00	1.61856E-03	5.46693E-05	7.46679E-01
2.3400E+02	5.6390E+00	1.60057E-03	5.44341E-05	7.49881E-01
2.3600E+02	5.5430E+00	1.49540E-03	5.29935E-05	7.52871E-01
2.3800E+02	5.4494E+00	1.51134E-03	5.32140E-05	7.55894E-01
2.4000E+02	5.3582E+00	1.44686E-03	5.23173E-05	7.58788E-01
2.4200E+02	5.2692E+00	1.48374E-03	5.28318E-05	7.61755E-01
2.4400E+02	5.1825E+00	1.53505E-03	5.35374E-05	7.64825E-01
2.4600E+02	5.0979E+00	1.42109E-03	5.19498E-05	7.67668E-01
2.4800E+02	5.0153E+00	1.38148E-03	5.13912E-05	7.70430E-01
2.5000E+02	4.9348E+00	1.47234E-03	5.26701E-05	7.73375E-01
2.5200E+02	4.8562E+00	1.34324E-03	5.08326E-05	7.76062E-01
2.5400E+02	4.7794E+00	1.33749E-03	5.07591E-05	7.78737E-01
2.5600E+02	4.7045E+00	1.33154E-03	5.06709E-05	7.81400E-01
2.5800E+02	4.6313E+00	1.32047E-03	5.05092E-05	7.84041E-01
2.6000E+02	4.5598E+00	1.18660E-03	4.85247E-05	7.86414E-01
2.6200E+02	4.4899E+00	1.13040E-03	4.76574E-05	7.88675E-01
2.6400E+02	4.4217E+00	1.18827E-03	4.85394E-05	7.91051E-01
2.6600E+02	4.3550E+00	1.16862E-03	4.82454E-05	7.93388E-01
2.6800E+02	4.2898E+00	9.99806E-04	4.55994E-05	7.95388E-01
2.7000E+02	4.2260E+00	1.09262E-03	4.70694E-05	7.97573E-01
2.7200E+02	4.1637E+00	9.92720E-04	4.54818E-05	7.99559E-01
2.7400E+02	4.1027E+00	1.05520E-03	4.64814E-05	8.01669E-01
2.7600E+02	4.0431E+00	1.04321E-03	4.62903E-05	8.03756E-01
2.7800E+02	3.9848E+00	1.05549E-03	4.64961E-05	8.05867E-01
2.8000E+02	3.9277E+00	9.37169E-04	4.45851E-05	8.07741E-01
2.8200E+02	3.8718E+00	9.92691E-04	4.54818E-05	8.09726E-01
2.8400E+02	3.8172E+00	9.49238E-04	4.47762E-05	8.11625E-01
2.8600E+02	3.7636E+00	8.46940E-04	4.30710E-05	8.13319E-01
2.8800E+02	3.7112E+00	7.41674E-04	4.12335E-05	8.14802E-01
2.9000E+02	3.6599E+00	8.15909E-04	4.25271E-05	8.16434E-01
2.9200E+02	3.6097E+00	8.25199E-04	4.26888E-05	8.18084E-01
2.9400E+02	3.5605E+00	8.42795E-04	4.29975E-05	8.19770E-01
2.9600E+02	3.5122E+00	7.15140E-04	4.07631E-05	8.21200E-01
2.9800E+02	3.4650E+00	7.40748E-04	4.12188E-05	8.22682E-01
3.0000E+02	3.4187E+00	7.54830E-04	4.14687E-05	8.24191E-01
3.0200E+02	3.3733E+00	7.03233E-04	4.05426E-05	8.25598E-01
3.0400E+02	3.3288E+00	8.00415E-04	4.22625E-05	8.27199E-01
3.0600E+02	3.2852E+00	7.48686E-04	4.13511E-05	8.28696E-01
3.0800E+02	3.2425E+00	8.00856E-04	4.22772E-05	8.30298E-01
3.1000E+02	3.2006E+00	7.37029E-04	4.11453E-05	8.31772E-01
3.1200E+02	3.1595E+00	7.42100E-04	4.12335E-05	8.33256E-01
3.1400E+02	3.1191E+00	7.66781E-04	4.16745E-05	8.34789E-01
3.1600E+02	3.0796E+00	8.15174E-04	4.25271E-05	8.36420E-01
3.1800E+02	3.0408E+00	8.73415E-04	4.35120E-05	8.38167E-01
3.2000E+02	3.0027E+00	9.15648E-04	4.42176E-05	8.39998E-01
3.2200E+02	2.9654E+00	8.74077E-04	4.35267E-05	8.41746E-01
3.2400E+02	2.9287E+00	7.50802E-04	4.13952E-05	8.43248E-01
3.2600E+02	2.8927E+00	7.26533E-04	4.09542E-05	8.44701E-01

3.2800E+02	2.8574E+00	7.01881E-04	4.05132E-05	8.46104E-01
3.3000E+02	2.8227E+00	7.07776E-04	4.06161E-05	8.47520E-01
3.3200E+02	2.7886E+00	6.87151E-04	4.02486E-05	8.48894E-01
3.3400E+02	2.7552E+00	6.45242E-04	3.94695E-05	8.50185E-01
3.3600E+02	2.7223E+00	6.80595E-04	4.01310E-05	8.51546E-01
3.3800E+02	2.6901E+00	6.38833E-04	3.93519E-05	8.52824E-01
3.4000E+02	2.6584E+00	6.44066E-04	3.94548E-05	8.54112E-01
3.4200E+02	2.6273E+00	6.01127E-04	3.86463E-05	8.55314E-01
3.4400E+02	2.5967E+00	6.85755E-04	4.02192E-05	8.56686E-01
3.4600E+02	2.5666E+00	6.13387E-04	3.88815E-05	8.57912E-01
3.4800E+02	2.5371E+00	6.72995E-04	3.99840E-05	8.59258E-01
3.5000E+02	2.5081E+00	5.41416E-04	3.74850E-05	8.60341E-01
3.5200E+02	2.4795E+00	5.52103E-04	3.77055E-05	8.61445E-01
3.5400E+02	2.4515E+00	5.57395E-04	3.78084E-05	8.62560E-01
3.5600E+02	2.4239E+00	6.19076E-04	3.89844E-05	8.63798E-01
3.5800E+02	2.3968E+00	5.60188E-04	3.78525E-05	8.64919E-01
3.6000E+02	2.3701E+00	5.17528E-04	3.70146E-05	8.65954E-01
3.6200E+02	2.3439E+00	5.71257E-04	3.80730E-05	8.67096E-01
3.6400E+02	2.3181E+00	5.61981E-04	3.78966E-05	8.68220E-01
3.6600E+02	2.2928E+00	5.37902E-04	3.74262E-05	8.69296E-01
3.6800E+02	2.2678E+00	3.79877E-04	3.41775E-05	8.70056E-01
3.7000E+02	2.2433E+00	4.22287E-04	3.50742E-05	8.70900E-01
3.7200E+02	2.2192E+00	4.33915E-04	3.53241E-05	8.71768E-01
3.7400E+02	2.1954E+00	3.98679E-04	3.45744E-05	8.72566E-01
3.7600E+02	2.1720E+00	4.06337E-04	3.47361E-05	8.73378E-01
3.7800E+02	2.1490E+00	3.39599E-04	3.32955E-05	8.74057E-01

Heavy Water 2.1 m. f. p.

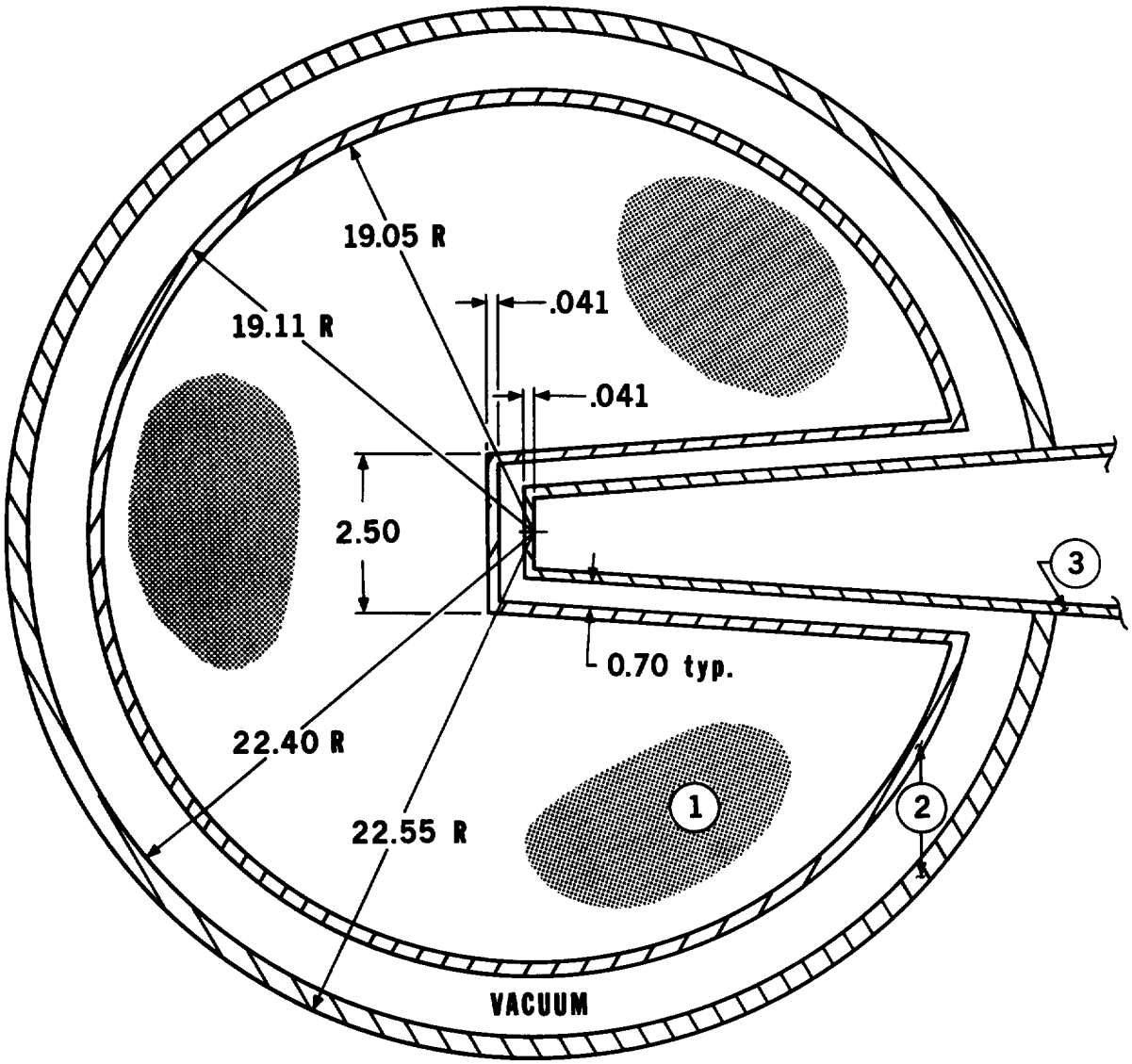

All Dimensions in Centimeters

Zone	Density (g/cm^3)	Material	Atomic %
1	1.105	D O	66.7 33.3
2	7.9	Fe	68.6
		Cr	20.0
		Ni	8.4
		Si	2.0
		Mn	1.0
3	I.C.T. Low Mass Ass'y and Target (See Fig.6, Sect. 1)		

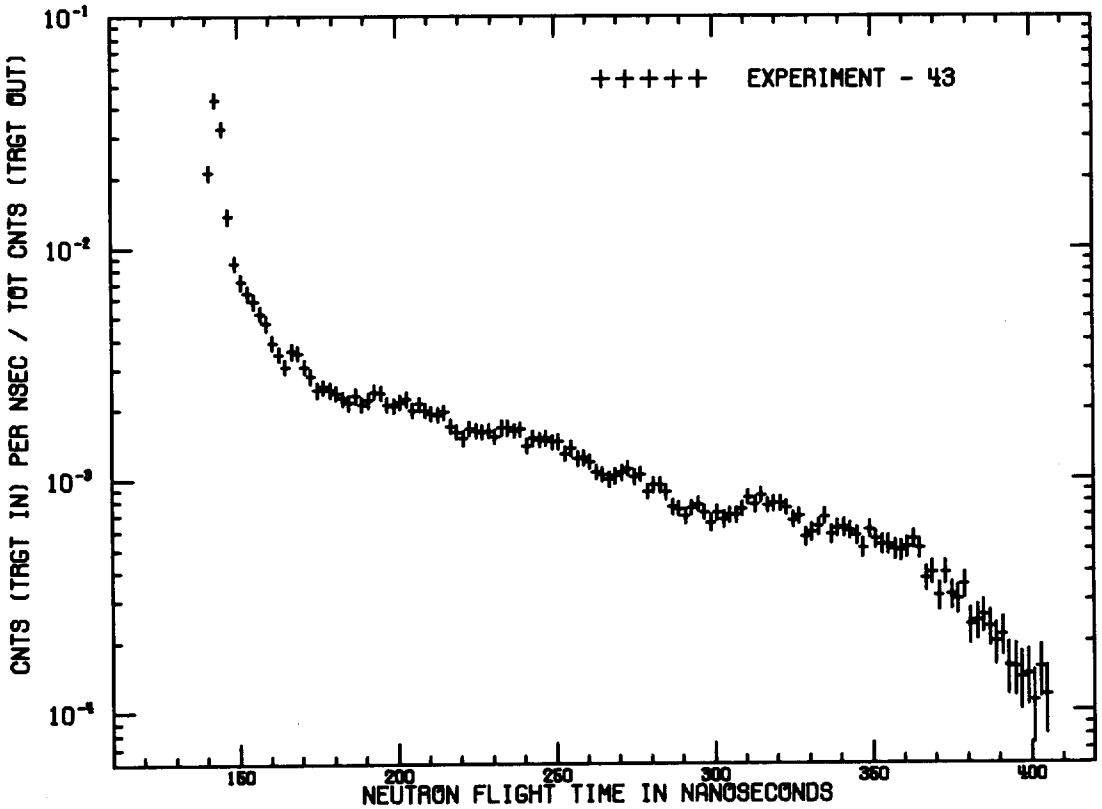

HEAVY WATER - 2.1 M.F.P. - 30 DEG.

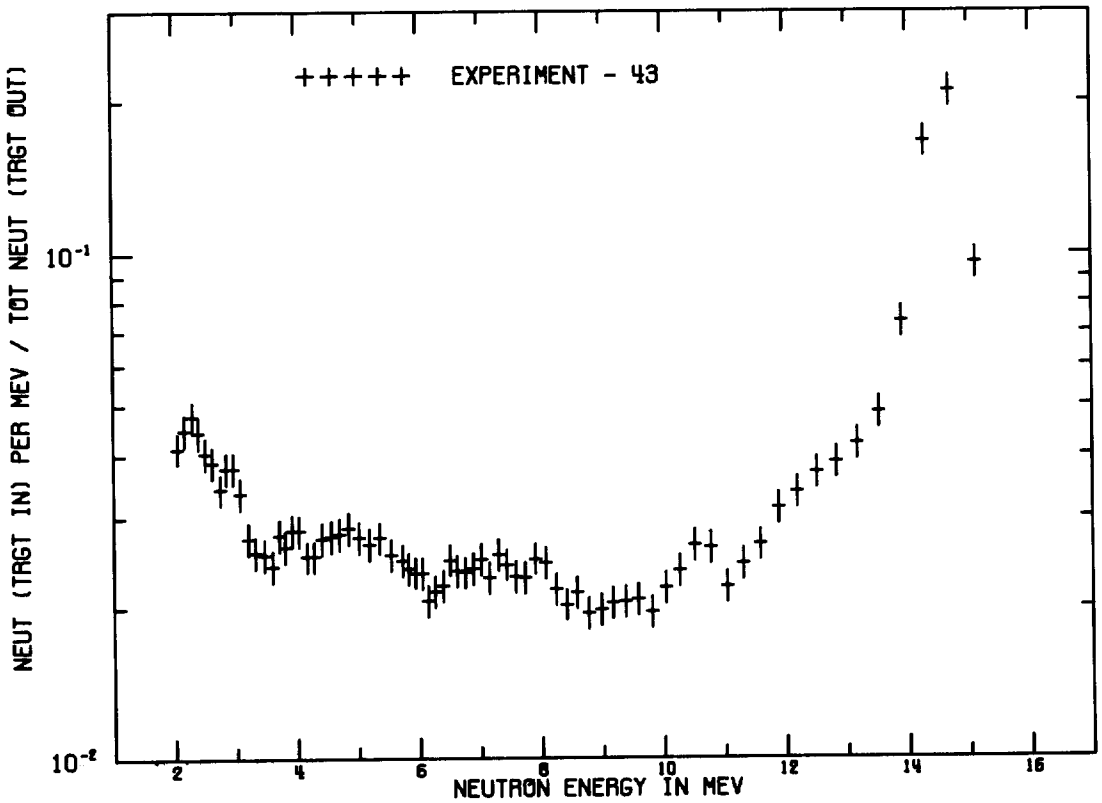

HEAVY WATER - 2.1 M.F.P. - 30 DEG.

HEAVY WATER - 2.1 M.F.P. - 30 DEG.
FLIGHTPATH = 765.20 CM DETECTOR = PILOT B FWHM = 5 NS

TIME(NS)	CALCULATED ENERGY(MEV)	CNT/NS/SOURCE	ERROR	INTEGRAL
1.4200E+02	1.5554E+01	2.04596E-03	7.23840E-05	4.09192E-03
1.4400E+02	1.5115E+01	2.10978E-02	2.05901E-04	4.62876E-02
1.4600E+02	1.4694E+01	4.35434E-02	2.93534E-04	1.33374E-01
1.4800E+02	1.4290E+01	3.27624E-02	2.55216E-04	1.98899E-01
1.5000E+02	1.3903E+01	1.36533E-02	1.66959E-04	2.26206E-01
1.5200E+02	1.3532E+01	8.57339E-03	1.34043E-04	2.43353E-01
1.5400E+02	1.3175E+01	7.11949E-03	1.23025E-04	2.57592E-01
1.5600E+02	1.2833E+01	6.34446E-03	1.16707E-04	2.70281E-01
1.5800E+02	1.2503E+01	5.86131E-03	1.12612E-04	2.82003E-01
1.6000E+02	1.2187E+01	5.20114E-03	1.06743E-04	2.92406E-01
1.6200E+02	1.1882E+01	4.71557E-03	1.02199E-04	3.01837E-01
1.6400E+02	1.1589E+01	3.89587E-03	9.40680E-05	3.09628E-01
1.6600E+02	1.1306E+01	3.48087E-03	8.96610E-05	3.16590E-01
1.6800E+02	1.1034E+01	3.06606E-03	8.50200E-05	3.22722E-01
1.7000E+02	1.0771E+01	3.58350E-03	9.07725E-05	3.29889E-01
1.7200E+02	1.0518E+01	3.53285E-03	9.02265E-05	3.36955E-01
1.7400E+02	1.0273E+01	3.07687E-03	8.51565E-05	3.43109E-01
1.7600E+02	1.0038E+01	2.78517E-03	8.17440E-05	3.48679E-01
1.7800E+02	9.8097E+00	2.43225E-03	7.74150E-05	3.53544E-01
1.8000E+02	9.5896E+00	2.50897E-03	7.83705E-05	3.58561E-01
1.8200E+02	9.3769E+00	2.42615E-03	7.73370E-05	3.63414E-01
1.8400E+02	9.1712E+00	2.35164E-03	7.64010E-05	3.68117E-01
1.8600E+02	8.9722E+00	2.23733E-03	7.49190E-05	3.72592E-01
1.8800E+02	8.7796E+00	2.13960E-03	7.36320E-05	3.76871E-01
1.9000E+02	8.5932E+00	2.29375E-03	7.56600E-05	3.81458E-01
1.9200E+02	8.4127E+00	2.10588E-03	7.32030E-05	3.85670E-01
1.9400E+02	8.2379E+00	2.18942E-03	7.42950E-05	3.90049E-01
1.9600E+02	8.0685E+00	2.39064E-03	7.68885E-05	3.94830E-01
1.9800E+02	7.9042E+00	2.36666E-03	7.65960E-05	3.99564E-01
2.0000E+02	7.7450E+00	2.10846E-03	7.32225E-05	4.03780E-01
2.0200E+02	7.5905E+00	2.07620E-03	7.27935E-05	4.07933E-01
2.0400E+02	7.4407E+00	2.15103E-03	7.37880E-05	4.12235E-01
2.0600E+02	7.2952E+00	2.21703E-03	7.46655E-05	4.16669E-01
2.0800E+02	7.1540E+00	1.98465E-03	7.15650E-05	4.20638E-01
2.1000E+02	7.0169E+00	2.11253E-03	7.32810E-05	4.24863E-01
2.1200E+02	6.8836E+00	1.99481E-03	7.17015E-05	4.28853E-01
2.1400E+02	6.7542E+00	1.92026E-03	7.06875E-05	4.32694E-01
2.1600E+02	6.6284E+00	1.89990E-03	7.03950E-05	4.36493E-01
2.1800E+02	6.5060E+00	1.95023E-03	7.10970E-05	4.40394E-01
2.2000E+02	6.3871E+00	1.69240E-03	6.74700E-05	4.43779E-01
2.2200E+02	6.2714E+00	1.60497E-03	6.61830E-05	4.46989E-01
2.2400E+02	6.1588E+00	1.50421E-03	6.46815E-05	4.49997E-01
2.2600E+02	6.0492E+00	1.65801E-03	6.69630E-05	4.53313E-01
2.2800E+02	5.9425E+00	1.61786E-03	6.63780E-05	4.56549E-01
2.3000E+02	5.8387E+00	1.60547E-03	6.62025E-05	4.59760E-01

2.3200E+02	5.7375E+00	1.61934E-03	6.63975E-05	4.62998E-01
2.3400E+02	5.6390E+00	1.53085E-03	6.50910E-05	4.66060E-01
2.3600E+02	5.5430E+00	1.66797E-03	6.70995E-05	4.69396E-01
2.3800E+02	5.4494E+00	1.66565E-03	6.70800E-05	4.72727E-01
2.4000E+02	5.3582E+00	1.61676E-03	6.63585E-05	4.75961E-01
2.4200E+02	5.2692E+00	1.64272E-03	6.67485E-05	4.79246E-01
2.4400E+02	5.1825E+00	1.39530E-03	6.30240E-05	4.82037E-01
2.4600E+02	5.0979E+00	1.50062E-03	6.46230E-05	4.85038E-01
2.4800E+02	5.0153E+00	1.47978E-03	6.43110E-05	4.87998E-01
2.5000E+02	4.9348E+00	1.50310E-03	6.46620E-05	4.91004E-01
2.5200E+02	4.8562E+00	1.44905E-03	6.38430E-05	4.93902E-01
2.5400E+02	4.7794E+00	1.45080E-03	6.38820E-05	4.96804E-01
2.5600E+02	4.7045E+00	1.28895E-03	6.13470E-05	4.99381E-01
2.5800E+02	4.6313E+00	1.35689E-03	6.24195E-05	5.02095E-01
2.6000E+02	4.5598E+00	1.22242E-03	6.02940E-05	5.04540E-01
2.6200E+02	4.4899E+00	1.23560E-03	6.05085E-05	5.07011E-01
2.6400E+02	4.4217E+00	1.18823E-03	5.97285E-05	5.09388E-01
2.6600E+02	4.3550E+00	1.07426E-03	5.78370E-05	5.11536E-01
2.6800E+02	4.2898E+00	1.04469E-03	5.73495E-05	5.13626E-01
2.7000E+02	4.2260E+00	9.95553E-04	5.64915E-05	5.15617E-01
2.7200E+02	4.1637E+00	1.03104E-03	5.71155E-05	5.17679E-01
2.7400E+02	4.1027E+00	1.06636E-03	5.77005E-05	5.19811E-01
2.7600E+02	4.0431E+00	1.11146E-03	5.84610E-05	5.22034E-01
2.7800E+02	3.9848E+00	1.01790E-03	5.68815E-05	5.24070E-01
2.8000E+02	3.9277E+00	1.04972E-03	5.74275E-05	5.26170E-01
2.8200E+02	3.8718E+00	8.81887E-04	5.45025E-05	5.27933E-01
2.8400E+02	3.8172E+00	9.40153E-04	5.55360E-05	5.29814E-01
2.8600E+02	3.7636E+00	9.40660E-04	5.55360E-05	5.31695E-01
2.8800E+02	3.7112E+00	8.79333E-04	5.44635E-05	5.33454E-01
2.9000E+02	3.6599E+00	7.57263E-04	5.22210E-05	5.34968E-01
2.9200E+02	3.6097E+00	7.42131E-04	5.19480E-05	5.36453E-01
2.9400E+02	3.5605E+00	6.90690E-04	5.09730E-05	5.37834E-01
2.9600E+02	3.5122E+00	7.50730E-04	5.21040E-05	5.39335E-01
2.9800E+02	3.4650E+00	7.76938E-04	5.25915E-05	5.40889E-01
3.0000E+02	3.4187E+00	7.20817E-04	5.15385E-05	5.42331E-01
3.0200E+02	3.3733E+00	6.48589E-04	5.01540E-05	5.43628E-01
3.0400E+02	3.3288E+00	7.14109E-04	5.14215E-05	5.45056E-01
3.0600E+02	3.2852E+00	6.71599E-04	5.06225E-05	5.46399E-01
3.0800E+02	3.2425E+00	6.99563E-04	5.11290E-05	5.47799E-01
3.1000E+02	3.2006E+00	6.95568E-04	5.11096E-05	5.49196E-01
3.1200E+02	3.1595E+00	7.46055E-04	5.21260E-05	5.50688E-01
3.1400E+02	3.1191E+00	8.34229E-04	5.36445E-05	5.52356E-01
3.1600E+02	3.0796E+00	7.73448E-04	5.25330E-05	5.53903E-01
3.1800E+02	3.0408E+00	8.55133E-04	5.40150E-05	5.55613E-01
3.2000E+02	3.0027E+00	7.68612E-04	5.24355E-05	5.57151E-01
3.2200E+02	2.9654E+00	7.83724E-04	5.27085E-05	5.58718E-01
3.2400E+02	2.9287E+00	7.83334E-04	5.27085E-05	5.60285E-01
3.2600E+02	2.8927E+00	7.54182E-04	5.21625E-05	5.61793E-01

3.2800E+02	2.8574E+00	6.65574E-04	5.04855E-05	5.63124E-01
3.3000E+02	2.8227E+00	6.93088E-04	5.10120E-05	5.64510E-01
3.3200E+02	2.7886E+00	5.65890E-04	4.85160E-05	5.65642E-01
3.3400E+02	2.7552E+00	5.88685E-04	4.89840E-05	5.66820E-01
3.3600E+02	2.7223E+00	6.22830E-04	4.96470E-05	5.68065E-01
3.3800E+02	2.6901E+00	6.88272E-04	5.09145E-05	5.69442E-01
3.4000E+02	2.6584E+00	5.73904E-04	4.86915E-05	5.70590E-01
3.4200E+02	2.6273E+00	6.10915E-04	4.94130E-05	5.71811E-01
3.4400E+02	2.5967E+00	6.16239E-04	4.95300E-05	5.73044E-01
3.4600E+02	2.5666E+00	5.97870E-04	4.91595E-05	5.74240E-01
3.4800E+02	2.5371E+00	5.72227E-04	4.86525E-05	5.75384E-01
3.5000E+02	2.5081E+00	5.05108E-04	4.72875E-05	5.76394E-01
3.5200E+02	2.4795E+00	6.07230E-04	4.93545E-05	5.77609E-01
3.5400E+02	2.4515E+00	5.49705E-04	4.82040E-05	5.78708E-01
3.5600E+02	2.4239E+00	5.21625E-04	4.76190E-05	5.79751E-01
3.5800E+02	2.3968E+00	5.21742E-04	4.76190E-05	5.80795E-01
3.6000E+02	2.3701E+00	4.95436E-04	4.70925E-05	5.81786E-01
3.6200E+02	2.3439E+00	4.90795E-04	4.69950E-05	5.82767E-01
3.6400E+02	2.3181E+00	5.08228E-04	4.73460E-05	5.83784E-01
3.6600E+02	2.2928E+00	5.49237E-04	4.81845E-05	5.84882E-01
3.6800E+02	2.2678E+00	5.02398E-04	4.72290E-05	5.85887E-01
3.7000E+02	2.2433E+00	3.75297E-04	4.45185E-05	5.86638E-01
3.7200E+02	2.2192E+00	3.96454E-04	4.49865E-05	5.87431E-01
3.7400E+02	2.1954E+00	3.14750E-04	4.31730E-05	5.88060E-01
3.7600E+02	2.1720E+00	3.97819E-04	4.50255E-05	5.88856E-01
3.7800E+02	2.1490E+00	3.18883E-04	4.32705E-05	5.89494E-01
3.8000E+02	2.1264E+00	3.05779E-04	4.29780E-05	5.90105E-01
3.8200E+02	2.1041E+00	3.51292E-04	4.39920E-05	5.90808E-01
3.8400E+02	2.0822E+00	2.36360E-04	4.13790E-05	5.91280E-01
3.8600E+02	2.0606E+00	2.45953E-04	4.15935E-05	5.91772E-01
3.8800E+02	2.0393E+00	2.59487E-04	4.19250E-05	5.92291E-01
3.9000E+02	2.0184E+00	2.30646E-04	4.12425E-05	5.92753E-01
3.9200E+02	1.9978E+00	1.99602E-04	4.05015E-05	5.93152E-01
3.9400E+02	1.9775E+00	2.13661E-04	4.08330E-05	5.93579E-01
3.9600E+02	1.9575E+00	1.57014E-04	3.94680E-05	5.93893E-01
3.9800E+02	1.9378E+00	1.55785E-04	3.94290E-05	5.94205E-01
4.0000E+02	1.9184E+00	1.40244E-04	3.90390E-05	5.94485E-01
4.0200E+02	1.8993E+00	1.44943E-04	3.91560E-05	5.94775E-01
4.0400E+02	1.8805E+00	1.11481E-04	3.83175E-05	5.94998E-01
4.0600E+02	1.8620E+00	1.54187E-04	3.93900E-05	5.95306E-01
4.0800E+02	1.8437E+00	1.18209E-04	3.84930E-05	5.95543E-01

Polyethylene 0.8 m.f.p.

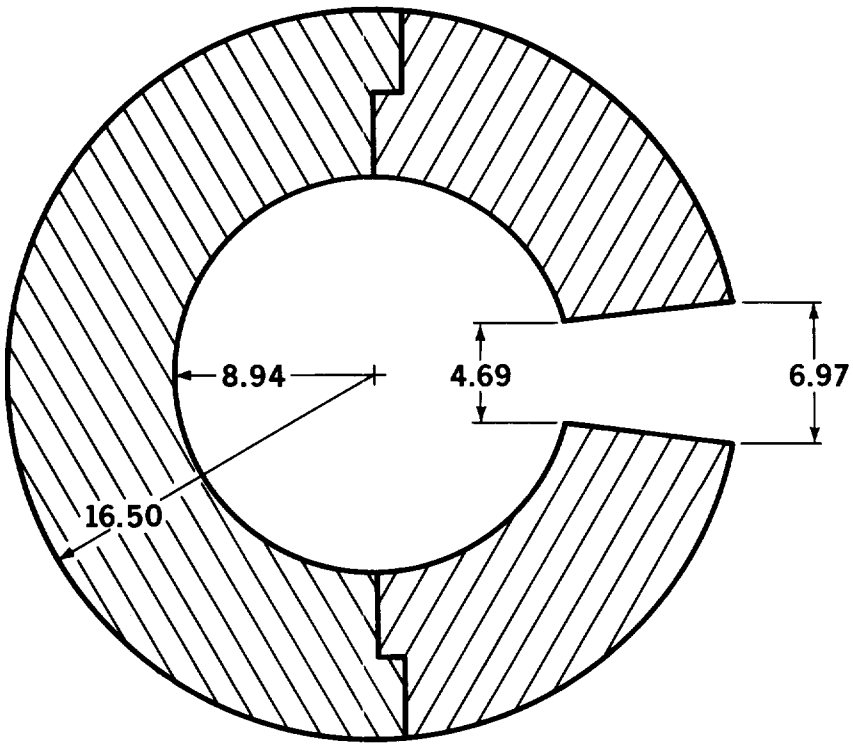

All Dimensions in Centimeters

$\rho = 0.92\ g/cm^3$

Material	Atomic %
H	66.7
C	33.3

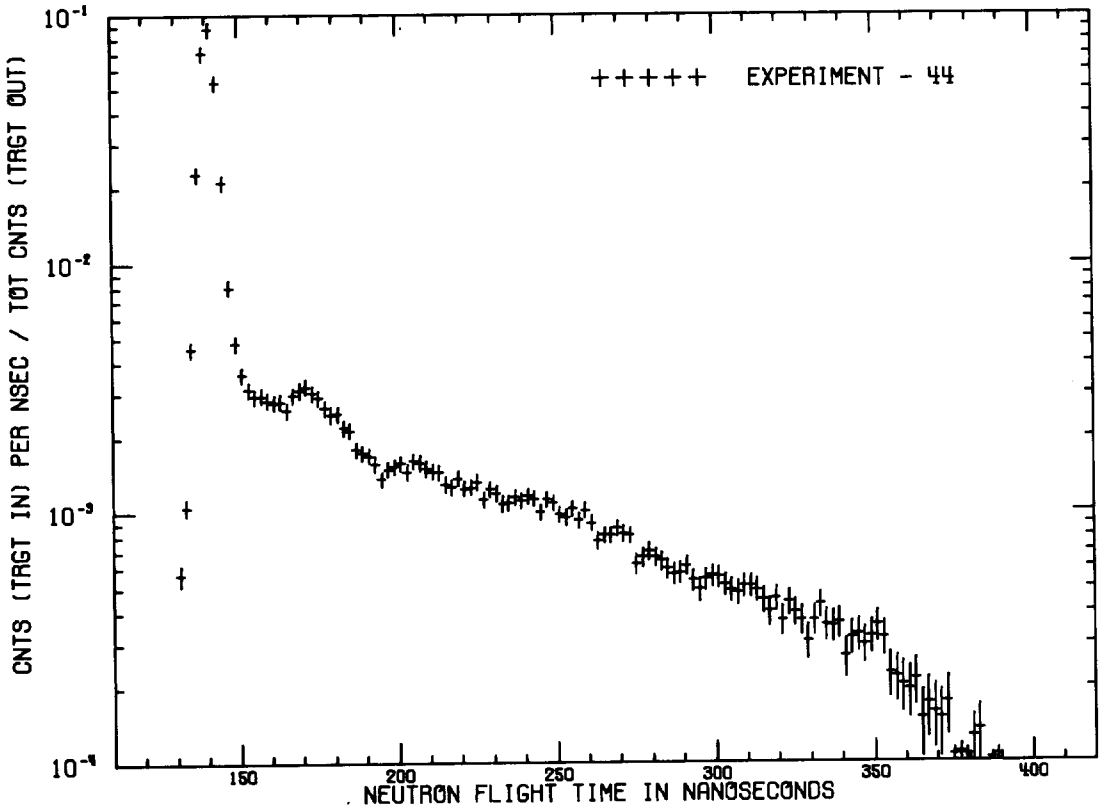

POLYETHYLENE - 0.8 M.F.P. - 30 DEG.

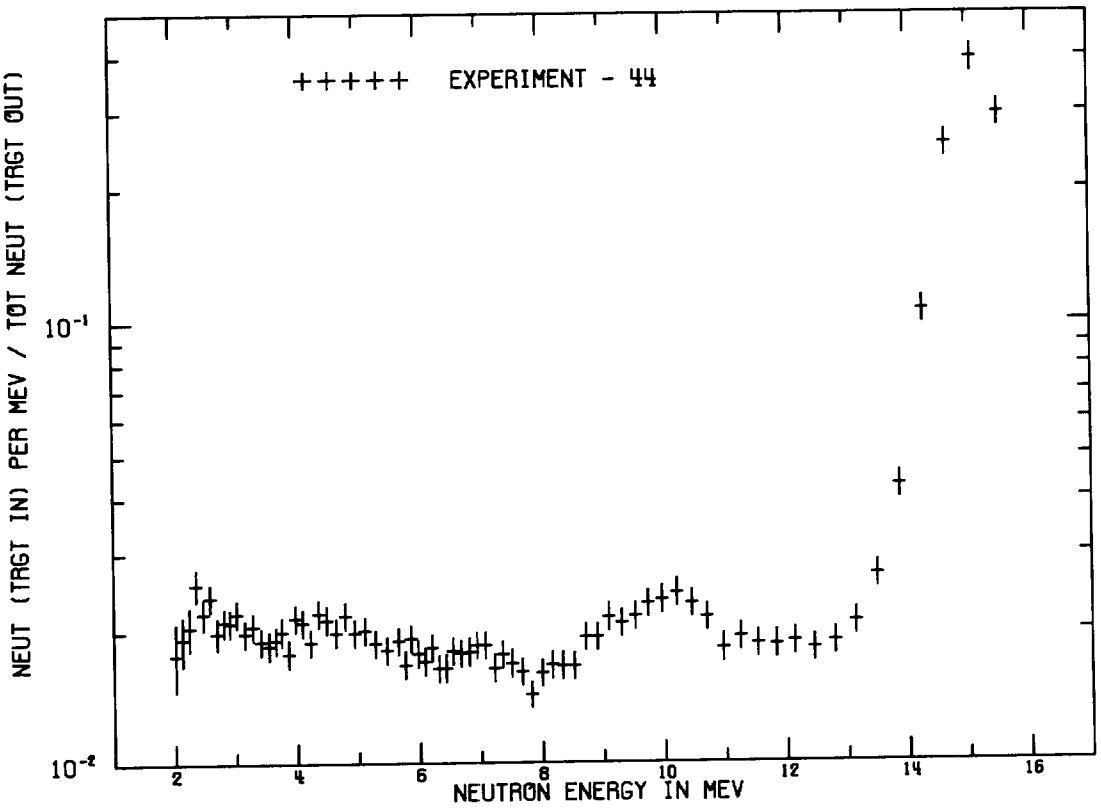

POLYETHYLENE - 0.8 M.F.P. - 30 DEG.

POLYETHYLENE - 0.8 M.F.P. - 30 DEG.
FLIGHTPATH = 754.00 CM DETECTOR = PILOT B FWHM = 6 NS

TIME(NS)	CALCULATED ENERGY(MEV)	CNT/NS/SOURCE	ERROR	INTEGRAL
1.3000E+02	1.8090E+01	2.74209E-04	4.76775E-05	5.48418E-04
1.3200E+02	1.7531E+01	5.63121E-04	5.32545E-05	1.67466E-03
1.3400E+02	1.6997E+01	1.04879E-03	6.15030E-05	3.77224E-03
1.3600E+02	1.6488E+01	4.53621E-03	1.02882E-04	1.28446E-02
1.3800E+02	1.6001E+01	2.28035E-02	2.14949E-04	5.84516E-02
1.4000E+02	1.5536E+01	7.00778E-02	3.72001E-04	1.98607E-01
1.4200E+02	1.5091E+01	8.80168E-02	4.16383E-04	3.74641E-01
1.4400E+02	1.4665E+01	5.32884E-02	3.25045E-04	4.81218E-01
1.4600E+02	1.4257E+01	2.11901E-02	2.07499E-04	5.23598E-01
1.4800E+02	1.3866E+01	8.01323E-03	1.31781E-04	5.39624E-01
1.5000E+02	1.3490E+01	4.78335E-03	1.05202E-04	5.49191E-01
1.5200E+02	1.3130E+01	3.59112E-03	9.35025E-05	5.56373E-01
1.5400E+02	1.2784E+01	3.13065E-03	8.85690E-05	5.62635E-01
1.5600E+02	1.2452E+01	2.92594E-03	8.62875E-05	5.68486E-01
1.5800E+02	1.2133E+01	2.94635E-03	8.65020E-05	5.74379E-01
1.6000E+02	1.1826E+01	2.82563E-03	8.51370E-05	5.80030E-01
1.6200E+02	1.1530E+01	2.76769E-03	8.44740E-05	5.85566E-01
1.6400E+02	1.1246E+01	2.79687E-03	8.48055E-05	5.91160E-01
1.6600E+02	1.0972E+01	2.57923E-03	8.22705E-05	5.96318E-01
1.6800E+02	1.0707E+01	2.95755E-03	8.66385E-05	6.02233E-01
1.7000E+02	1.0453E+01	3.10450E-03	8.82765E-05	6.08442E-01
1.7200E+02	1.0207E+01	3.21276E-03	8.94660E-05	6.14868E-01
1.7400E+02	9.9702E+00	3.02554E-03	8.73990E-05	6.20919E-01
1.7600E+02	9.7413E+00	2.89245E-03	8.58975E-05	6.26704E-01
1.7800E+02	9.5203E+00	2.63205E-03	8.28945E-05	6.31968E-01
1.8000E+02	9.3068E+00	2.48305E-03	8.11200E-05	6.36934E-01
1.8200E+02	9.1004E+00	2.50497E-03	8.13930E-05	6.41944E-01
1.8400E+02	8.9009E+00	2.19979E-03	7.76490E-05	6.46343E-01
1.8600E+02	8.7078E+00	2.14256E-03	7.69275E-05	6.50628E-01
1.8800E+02	8.5210E+00	1.79439E-03	7.23645E-05	6.54217E-01
1.9000E+02	8.3402E+00	1.74287E-03	7.16820E-05	6.57703E-01
1.9200E+02	8.1651E+00	1.69718E-03	7.10580E-05	6.61097E-01
1.9400E+02	7.9954E+00	1.57355E-03	6.93225E-05	6.64244E-01
1.9600E+02	7.8311E+00	1.36157E-03	6.62805E-05	6.66968E-01
1.9800E+02	7.6717E+00	1.49481E-03	6.82110E-05	6.69957E-01
2.0000E+02	7.5172E+00	1.53648E-03	6.88155E-05	6.73030E-01
2.0200E+02	7.3674E+00	1.57700E-03	6.93810E-05	6.76184E-01
2.0400E+02	7.2219E+00	1.46034E-03	6.77235E-05	6.79105E-01
2.0600E+02	7.0808E+00	1.61649E-03	6.99270E-05	6.82338E-01
2.0800E+02	6.9438E+00	1.59036E-03	6.95760E-05	6.85519E-01
2.1000E+02	6.8107E+00	1.50665E-03	6.83865E-05	6.88532E-01
2.1200E+02	6.6815E+00	1.46332E-03	6.77625E-05	6.91458E-01
2.1400E+02	6.5559E+00	1.45164E-03	6.75870E-05	6.94362E-01
2.1600E+02	6.4338E+00	1.29839E-03	6.53445E-05	6.96959E-01
2.1800E+02	6.3151E+00	1.26241E-03	6.47985E-05	6.99483E-01

2.2000E+02	6.1996E+00	1.37284E-03	6.64560E-05	7.02229E-01
2.2200E+02	6.0874E+00	1.24564E-03	6.45645E-05	7.04720E-01
2.2400E+02	5.9781E+00	1.25933E-03	6.47595E-05	7.07239E-01
2.2600E+02	5.8718E+00	1.32514E-03	6.57540E-05	7.09889E-01
2.2800E+02	5.7683E+00	1.12519E-03	6.27120E-05	7.12140E-01
2.3000E+02	5.6675E+00	1.23887E-03	6.44475E-05	7.14617E-01
2.3200E+02	5.5693E+00	1.19326E-03	6.37650E-05	7.17004E-01
2.3400E+02	5.4737E+00	1.08303E-03	6.20490E-05	7.19170E-01
2.3600E+02	5.3805E+00	1.09414E-03	6.22245E-05	7.21358E-01
2.3800E+02	5.2897E+00	1.15103E-03	6.31020E-05	7.23660E-01
2.4000E+02	5.2012E+00	1.11222E-03	6.25170E-05	7.25885E-01
2.4200E+02	5.1149E+00	1.15863E-03	6.32190E-05	7.28202E-01
2.4400E+02	5.0307E+00	1.13250E-03	6.28290E-05	7.30467E-01
2.4600E+02	4.9486E+00	1.00263E-03	6.07815E-05	7.32472E-01
2.4800E+02	4.8685E+00	1.12494E-03	6.27120E-05	7.34722E-01
2.5000E+02	4.7903E+00	1.09370E-03	6.22245E-05	7.36910E-01
2.5200E+02	4.7140E+00	9.82449E-04	6.04500E-05	7.38874E-01
2.5400E+02	4.6395E+00	9.54115E-04	5.99820E-05	7.40783E-01
2.5600E+02	4.5667E+00	1.03580E-03	6.13080E-05	7.42854E-01
2.5800E+02	4.4957E+00	9.29623E-04	5.95920E-05	7.44714E-01
2.6000E+02	4.4263E+00	1.01913E-03	6.10350E-05	7.46752E-01
2.6200E+02	4.3585E+00	9.05872E-04	5.92020E-05	7.48564E-01
2.6400E+02	4.2923E+00	7.69840E-04	5.69205E-05	7.50103E-01
2.6600E+02	4.2276E+00	8.07670E-04	5.75640E-05	7.51719E-01
2.6800E+02	4.1643E+00	8.08801E-04	5.75835E-05	7.53336E-01
2.7000E+02	4.1024E+00	8.60691E-04	5.84610E-05	7.55058E-01
2.7200E+02	4.0419E+00	8.22003E-04	5.77980E-05	7.56702E-01
2.7400E+02	3.9827E+00	8.11200E-04	5.76225E-05	7.58324E-01
2.7600E+02	3.9249E+00	6.22187E-04	5.43270E-05	7.59568E-01
2.7800E+02	3.8683E+00	6.59782E-04	5.49900E-05	7.60888E-01
2.8000E+02	3.8129E+00	7.00732E-04	5.57115E-05	7.62289E-01
2.8200E+02	3.7586E+00	6.61440E-04	5.50290E-05	7.63612E-01
2.8400E+02	3.7056E+00	6.39717E-04	5.46390E-05	7.64892E-01
2.8600E+02	3.6536E+00	5.95081E-04	5.38395E-05	7.66082E-01
2.8800E+02	3.6028E+00	5.67723E-04	5.33520E-05	7.67217E-01
2.9000E+02	3.5530E+00	5.72481E-04	5.34300E-05	7.68362E-01
2.9200E+02	3.5042E+00	6.11695E-04	5.41320E-05	7.69586E-01
2.9400E+02	3.4564E+00	5.33481E-04	5.27085E-05	7.70653E-01
2.9600E+02	3.4096E+00	4.90269E-04	5.19090E-05	7.71633E-01
2.9800E+02	3.3638E+00	5.39175E-04	5.28255E-05	7.72711E-01
3.0000E+02	3.3188E+00	5.58421E-04	5.31765E-05	7.73828E-01
3.0200E+02	3.2748E+00	5.51284E-04	5.30400E-05	7.74931E-01
3.0400E+02	3.2316E+00	5.14878E-04	5.23770E-05	7.75961E-01
3.0600E+02	3.1893E+00	4.87675E-04	5.18505E-05	7.76936E-01
3.0800E+02	3.1478E+00	4.77516E-04	5.16750E-05	7.77891E-01
3.1000E+02	3.1071E+00	5.09983E-04	5.22795E-05	7.78911E-01
3.1200E+02	3.0672E+00	5.07565E-04	5.22405E-05	7.79926E-01
3.1400E+02	3.0281E+00	4.88299E-04	5.18700E-05	7.80903E-01

3.1600E+02	2.9897E+00	4.45984E-04	5.10705E-05	7.81795E-01
3.1800E+02	2.9520E+00	4.02051E-04	5.02320E-05	7.82599E-01
3.2000E+02	2.9151E+00	4.53336E-04	5.12070E-05	7.83505E-01
3.2200E+02	2.8788E+00	3.71514E-04	4.96275E-05	7.84248E-01
3.2400E+02	2.8432E+00	4.37404E-04	5.09145E-05	7.85123E-01
3.2600E+02	2.8083E+00	3.99106E-04	5.01735E-05	7.85921E-01
3.2800E+02	2.7740E+00	3.71026E-04	4.96080E-05	7.86664E-01
3.3000E+02	2.7403E+00	3.04999E-04	4.83015E-05	7.87274E-01
3.3200E+02	2.7072E+00	3.71377E-04	4.96275E-05	7.88016E-01
3.3400E+02	2.6748E+00	4.28727E-04	5.07390E-05	7.88874E-01
3.3600E+02	2.6429E+00	3.55251E-04	4.93155E-05	7.89584E-01
3.3800E+02	2.6116E+00	3.51429E-04	4.92375E-05	7.90287E-01
3.4000E+02	2.5808E+00	3.59950E-04	4.93935E-05	7.91007E-01
3.4200E+02	2.5506E+00	2.65688E-04	4.75020E-05	7.91538E-01
3.4400E+02	2.5209E+00	3.16192E-04	4.85355E-05	7.92171E-01
3.4600E+02	2.4917E+00	3.25494E-04	4.87110E-05	7.92822E-01
3.4800E+02	2.4631E+00	2.97024E-04	4.81455E-05	7.93416E-01
3.5000E+02	2.4349E+00	3.20151E-04	4.86135E-05	7.94056E-01
3.5200E+02	2.4072E+00	3.52638E-04	4.92570E-05	7.94761E-01
3.5400E+02	2.3800E+00	3.15705E-04	4.85160E-05	7.95393E-01
3.5600E+02	2.3532E+00	2.27740E-04	4.67220E-05	7.95848E-01
3.5800E+02	2.3269E+00	2.20057E-04	4.65660E-05	7.96288E-01
3.6000E+02	2.3010E+00	2.04691E-04	4.62345E-05	7.96698E-01
3.6200E+02	2.2756E+00	1.95409E-04	4.60395E-05	7.97089E-01
3.6400E+02	2.2505E+00	2.13915E-04	4.64295E-05	7.97516E-01
3.6600E+02	2.2259E+00	1.49136E-04	4.50450E-05	7.97815E-01
3.6800E+02	2.2017E+00	1.71113E-04	4.55130E-05	7.98157E-01
3.7000E+02	2.1779E+00	1.58301E-04	4.52400E-05	7.98474E-01
3.7200E+02	2.1544E+00	1.49214E-04	4.50450E-05	7.98772E-01
3.7400E+02	2.1314E+00	1.73316E-04	4.55715E-05	7.99119E-01
3.7600E+02	2.1087E+00	1.06334E-04	4.41090E-05	7.99331E-01
3.7800E+02	2.0864E+00	1.08791E-04	4.41675E-05	7.99549E-01
3.8000E+02	2.0644E+00	1.06431E-04	4.41090E-05	7.99762E-01
3.8200E+02	2.0428E+00	1.26087E-04	4.45380E-05	8.00014E-01
3.8400E+02	2.0215E+00	1.34355E-04	4.47330E-05	8.00283E-01
3.8600E+02	2.0005E+00	5.86755E-05	4.30365E-05	8.00400E-01
3.8800E+02	1.9799E+00	1.03779E-04	4.40505E-05	8.00607E-01
3.9000E+02	1.9596E+00	1.06314E-04	4.41090E-05	8.00820E-01
3.9200E+02	1.9395E+00	5.15580E-05	4.28805E-05	8.00923E-01
3.9400E+02	1.9198E+00	5.17530E-05	4.28805E-05	8.01027E-01
3.9600E+02	1.9004E+00	6.59880E-05	4.32120E-05	8.01159E-01
3.9800E+02	1.8813E+00	4.68195E-05	4.27830E-05	8.01252E-01

Polyethylene 1.8 m. f. p.

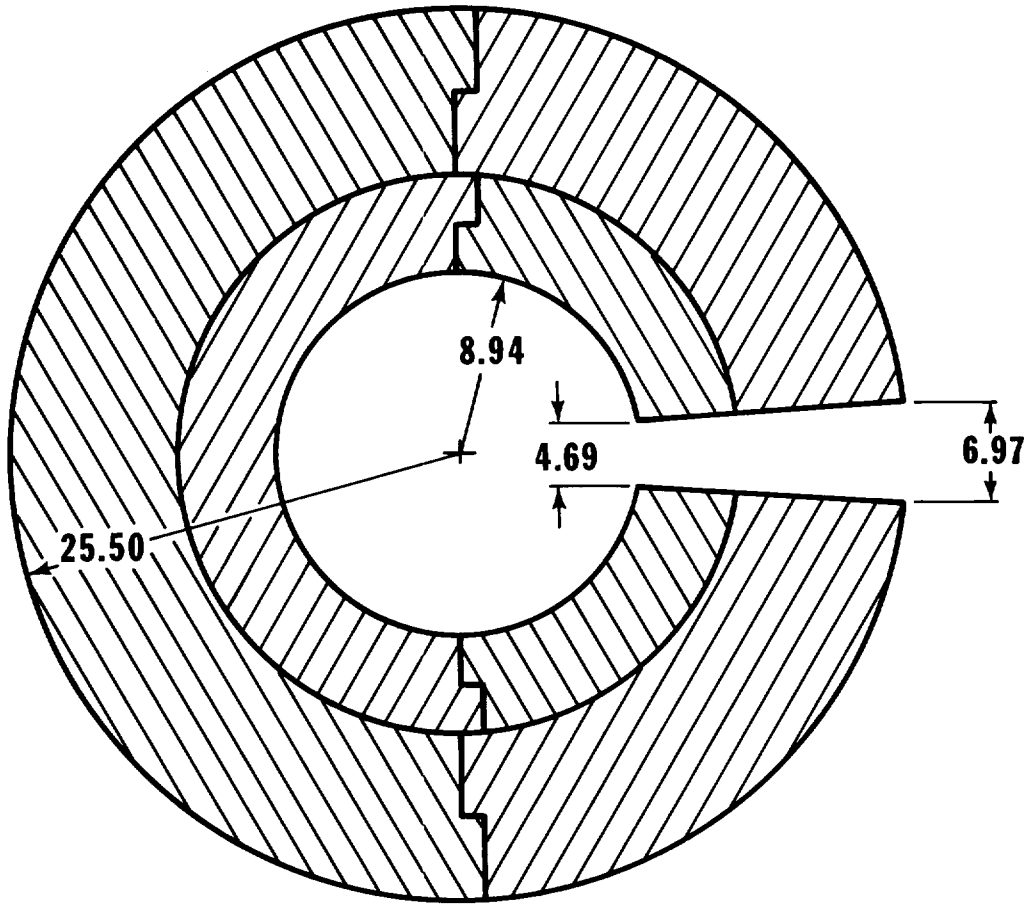

All Dimensions in Centimeters

$\rho = 0.92$ g cm^3

Material	Atomic %
H	66.7
C	33.3

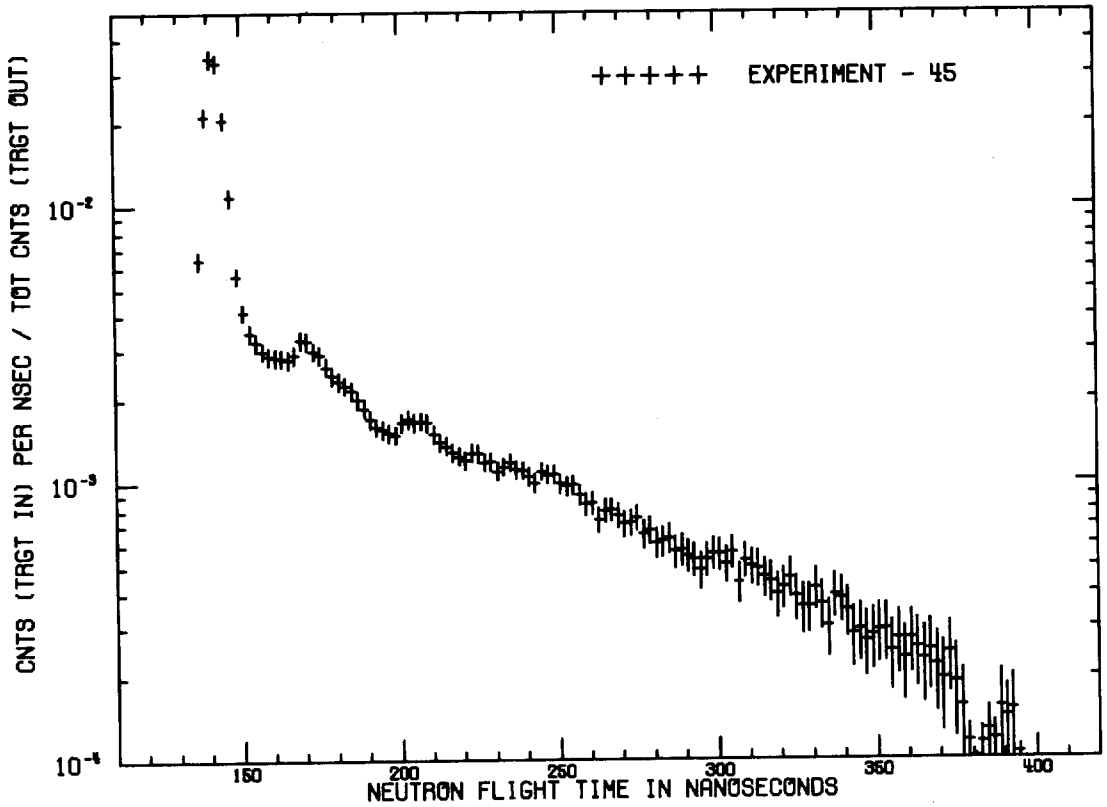

POLYETHYLENE - 1.8 M.F.P. - 30 DEG.

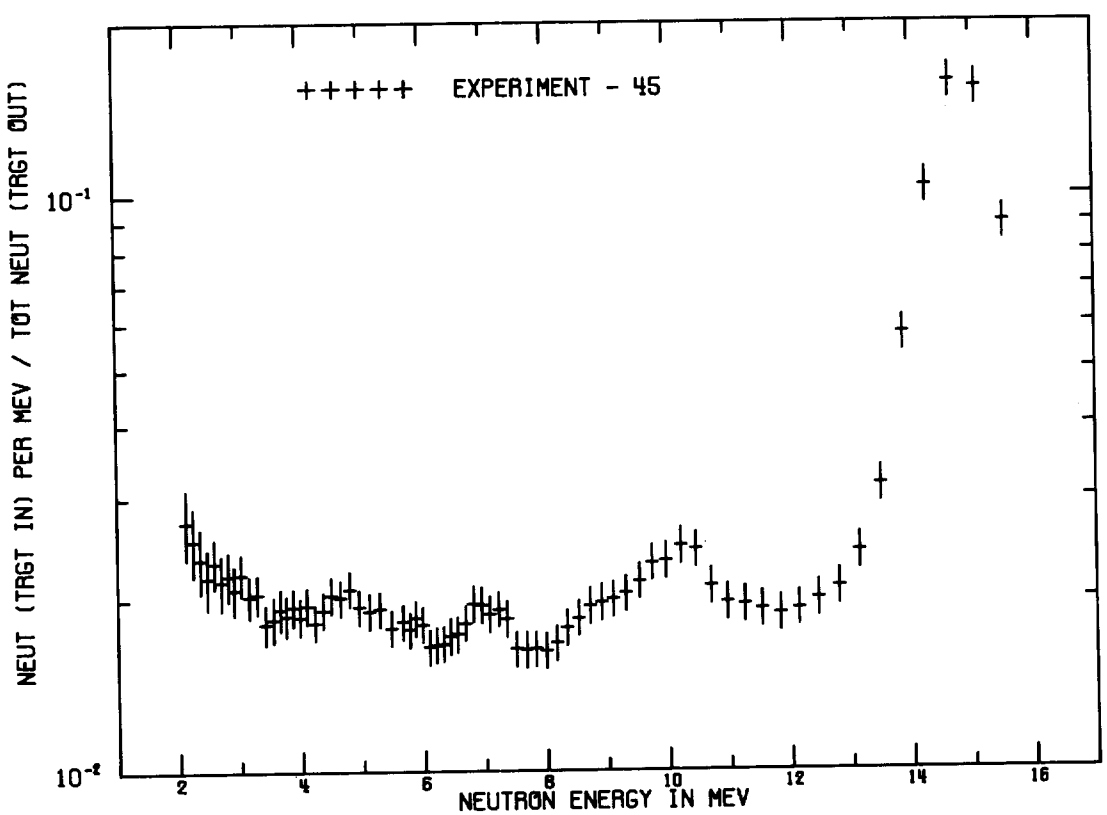

POLYETHYLENE - 1.8 M.F.P. - 30 DEG.

POLYETHYLENE - 1.8 M.F.P. - 30 DEG.
FLIGHTPATH = 754.00 CM DETECTOR = PILOT B FWHM = 6 NS

TIME(NS)	CALCULATED ENERGY(MEV)	CNT/NS/SOURCE	ERROR	INTEGRAL
1.3800E+02	1.6001E+01	6.39392E-03	1.05955E-04	1.27878E-02
1.4000E+02	1.5536E+01	2.12041E-02	1.63905E-04	5.51960E-02
1.4200E+02	1.5091E+01	3.42844E-02	2.01495E-04	1.23765E-01
1.4400E+02	1.4665E+01	3.32037E-02	1.98660E-04	1.90172E-01
1.4600E+02	1.4257E+01	2.06279E-02	1.62047E-04	2.31428E-01
1.4800E+02	1.3866E+01	1.08220E-02	1.26346E-04	2.53072E-01
1.5000E+02	1.3490E+01	5.61791E-03	1.02470E-04	2.64308E-01
1.5200E+02	1.3130E+01	4.13004E-03	9.45420E-05	2.72568E-01
1.5400E+02	1.2784E+01	3.46185E-03	9.07515E-05	2.79492E-01
1.5600E+02	1.2452E+01	3.20173E-03	8.92395E-05	2.85895E-01
1.5800E+02	1.2133E+01	2.99025E-03	8.79795E-05	2.91876E-01
1.6000E+02	1.1826E+01	2.85405E-03	8.71605E-05	2.97584E-01
1.6200E+02	1.1530E+01	2.83660E-03	8.70555E-05	3.03257E-01
1.6400E+02	1.1246E+01	2.81679E-03	8.69400E-05	3.08890E-01
1.6600E+02	1.0972E+01	2.77329E-03	8.66775E-05	3.14437E-01
1.6800E+02	1.0707E+01	2.89158E-03	8.73915E-05	3.20220E-01
1.7000E+02	1.0453E+01	3.27029E-03	8.96385E-05	3.26761E-01
1.7200E+02	1.0207E+01	3.24298E-03	8.94810E-05	3.33247E-01
1.7400E+02	9.9702E+00	2.98431E-03	8.79480E-05	3.39215E-01
1.7600E+02	9.7413E+00	2.89009E-03	8.73810E-05	3.44996E-01
1.7800E+02	9.5203E+00	2.61751E-03	8.57325E-05	3.50231E-01
1.8000E+02	9.3068E+00	2.42642E-03	8.45460E-05	3.55083E-01
1.8200E+02	9.1004E+00	2.31944E-03	8.38845E-05	3.59722E-01
1.8400E+02	8.9009E+00	2.24021E-03	8.33910E-05	3.64203E-01
1.8600E+02	8.7078E+00	2.14846E-03	8.28030E-05	3.68500E-01
1.8800E+02	8.5210E+00	1.98730E-03	8.17740E-05	3.72474E-01
1.9000E+02	8.3402E+00	1.85548E-03	8.09235E-05	3.76185E-01
1.9200E+02	8.1651E+00	1.69116E-03	7.98525E-05	3.79568E-01
1.9400E+02	7.9954E+00	1.58698E-03	7.91700E-05	3.82741E-01
1.9600E+02	7.8311E+00	1.55218E-03	7.89390E-05	3.85846E-01
1.9800E+02	7.6717E+00	1.50822E-03	7.86450E-05	3.88862E-01
2.0000E+02	7.5172E+00	1.48427E-03	7.84875E-05	3.91831E-01
2.0200E+02	7.3674E+00	1.64438E-03	7.95480E-05	3.95120E-01
2.0400E+02	7.2219E+00	1.69564E-03	7.98840E-05	3.98511E-01
2.0600E+02	7.0808E+00	1.64045E-03	7.95165E-05	4.01792E-01
2.0800E+02	6.9438E+00	1.66647E-03	7.96950E-05	4.05125E-01
2.1000E+02	6.8107E+00	1.64341E-03	7.95375E-05	4.08412E-01
2.1200E+02	6.6815E+00	1.49153E-03	7.85295E-05	4.11395E-01
2.1400E+02	6.5559E+00	1.39867E-03	7.79100E-05	4.14192E-01
2.1600E+02	6.4338E+00	1.35350E-03	7.70280E-05	4.16899E-01
2.1800E+02	6.3151E+00	1.28033E-03	7.71015E-05	4.19460E-01
2.2000E+02	6.1996E+00	1.24180E-03	7.68390E-05	4.21943E-01
2.2200E+02	6.0874E+00	1.19959E-03	7.65555E-05	4.24342E-01
2.2400E+02	5.9781E+00	1.27759E-03	7.70910E-05	4.26898E-01
2.2600E+02	5.8718E+00	1.27279E-03	7.70595E-05	4.29443E-01

2.2800E+02	5.7683E+00	1.18298E-03	7.64400E-05	4.31809E-01
2.3000E+02	5.6675E+00	1.18991E-03	7.64925E-05	4.34189E-01
2.3200E+02	5.5693E+00	1.09659E-03	7.58415E-05	4.36382E-01
2.3400E+02	5.4737E+00	1.13630E-03	7.61145E-05	4.38655E-01
2.3600E+02	5.3805E+00	1.18199E-03	7.64295E-05	4.41019E-01
2.3800E+02	5.2897E+00	1.10780E-03	7.59255E-05	4.43234E-01
2.4000E+02	5.2012E+00	1.10635E-03	7.59150E-05	4.45447E-01
2.4200E+02	5.1149E+00	1.05218E-03	7.55370E-05	4.47551E-01
2.4400E+02	5.0307E+00	9.91746E-04	7.51170E-05	4.49535E-01
2.4600E+02	4.9486E+00	1.09469E-03	7.58310E-05	4.51724E-01
2.4800E+02	4.8685E+00	1.06517E-03	7.56315E-05	4.53855E-01
2.5000E+02	4.7903E+00	1.06638E-03	7.56315E-05	4.55987E-01
2.5200E+02	4.7140E+00	9.89226E-04	7.50960E-05	4.57966E-01
2.5400E+02	4.6395E+00	9.69475E-04	7.49595E-05	4.59905E-01
2.5600E+02	4.5667E+00	9.79682E-04	7.50330E-05	4.61864E-01
2.5800E+02	4.4957E+00	8.99934E-04	7.44660E-05	4.63664E-01
2.6000E+02	4.4263E+00	8.34193E-04	7.40040E-05	4.65332E-01
2.6200E+02	4.3585E+00	8.43139E-04	7.40670E-05	4.67019E-01
2.6400E+02	4.2923E+00	7.31787E-04	7.32795E-05	4.68482E-01
2.6600E+02	4.2276E+00	7.90618E-04	7.36995E-05	4.70063E-01
2.6800E+02	4.1643E+00	7.96530E-04	7.37415E-05	4.71656E-01
2.7000E+02	4.1024E+00	7.58520E-04	7.34685E-05	4.73174E-01
2.7200E+02	4.0419E+00	7.06723E-04	7.31010E-05	4.74587E-01
2.7400E+02	3.9827E+00	7.14556E-04	7.31535E-05	4.76016E-01
2.7600E+02	3.9249E+00	7.45059E-04	7.33740E-05	4.77506E-01
2.7800E+02	3.8683E+00	6.48438E-04	7.26810E-05	4.78803E-01
2.8000E+02	3.8129E+00	6.70236E-04	7.28385E-05	4.80144E-01
2.8200E+02	3.7586E+00	6.02994E-04	7.23450E-05	4.81350E-01
2.8400E+02	3.7056E+00	6.12738E-04	7.24185E-05	4.82575E-01
2.8600E+02	3.6536E+00	6.27942E-04	7.25235E-05	4.83831E-01
2.8800E+02	3.6028E+00	5.62506E-04	7.20510E-05	4.84956E-01
2.9000E+02	3.5530E+00	5.70307E-04	7.21140E-05	4.86097E-01
2.9200E+02	3.5042E+00	5.45664E-04	7.19250E-05	4.87188E-01
2.9400E+02	3.4564E+00	5.27205E-04	7.17990E-05	4.88242E-01
2.9600E+02	3.4096E+00	4.82685E-04	7.14735E-05	4.89208E-01
2.9800E+02	3.3638E+00	5.27940E-04	7.17990E-05	4.90264E-01
3.0000E+02	3.3188E+00	5.55250E-04	7.19985E-05	4.91374E-01
3.0200E+02	3.2748E+00	5.51828E-04	7.19775E-05	4.92478E-01
3.0400E+02	3.2316E+00	5.06457E-04	7.16415E-05	4.93491E-01
3.0600E+02	3.1893E+00	5.59240E-04	7.20300E-05	4.94609E-01
3.0800E+02	3.1478E+00	4.38039E-04	7.11375E-05	4.95485E-01
3.1000E+02	3.1071E+00	5.24485E-04	7.17780E-05	4.96534E-01
3.1200E+02	3.0672E+00	4.99023E-04	7.15890E-05	4.97532E-01
3.1400E+02	3.0281E+00	4.90959E-04	7.15260E-05	4.98514E-01
3.1600E+02	2.9897E+00	4.55899E-04	7.12740E-05	4.99426E-01
3.1800E+02	2.9520E+00	4.42239E-04	7.11690E-05	5.00310E-01
3.2000E+02	2.9151E+00	3.94957E-04	7.08225E-05	5.01100E-01
3.2200E+02	2.8788E+00	4.19885E-04	7.10010E-05	5.01940E-01

3.2400E+02	2.8432E+00	4.54461E-04	7.12635E-05	5.02849E-01
3.2600E+02	2.8083E+00	3.87219E-04	7.07595E-05	5.03623E-01
3.2800E+02	2.7740E+00	3.55351E-04	7.05285E-05	5.04334E-01
3.3000E+02	2.7403E+00	3.57588E-04	7.05390E-05	5.05049E-01
3.3200E+02	2.7072E+00	4.16346E-04	7.09800E-05	5.05882E-01
3.3400E+02	2.6748E+00	3.64665E-04	7.05915E-05	5.06611E-01
3.3600E+02	2.6429E+00	3.04395E-04	7.01505E-05	5.07220E-01
3.3800E+02	2.6116E+00	3.93519E-04	7.08120E-05	5.08007E-01
3.4000E+02	2.5808E+00	3.82956E-04	7.07280E-05	5.08773E-01
3.4200E+02	2.5506E+00	3.46542E-04	7.04655E-05	5.09466E-01
3.4400E+02	2.5209E+00	2.84550E-04	7.00035E-05	5.10035E-01
3.4600E+02	2.4917E+00	2.95113E-04	7.00770E-05	5.10625E-01
3.4800E+02	2.4631E+00	2.68516E-04	6.98775E-05	5.11162E-01
3.5000E+02	2.4349E+00	2.81284E-04	6.99720E-05	5.11725E-01
3.5200E+02	2.4072E+00	2.93013E-04	7.00665E-05	5.12311E-01
3.5400E+02	2.3800E+00	2.94682E-04	7.00770E-05	5.12900E-01
3.5600E+02	2.3532E+00	2.46403E-04	6.97095E-05	5.13393E-01
3.5800E+02	2.3269E+00	2.72359E-04	6.99090E-05	5.13938E-01
3.6000E+02	2.3010E+00	2.32008E-04	6.96045E-05	5.14402E-01
3.6200E+02	2.2756E+00	2.73934E-04	6.99195E-05	5.14950E-01
3.6400E+02	2.2505E+00	2.52462E-04	6.97620E-05	5.15455E-01
3.6600E+02	2.2259E+00	2.29551E-04	6.95835E-05	5.15914E-01
3.6800E+02	2.2017E+00	2.47958E-04	6.97200E-05	5.16410E-01
3.7000E+02	2.1779E+00	2.18053E-04	6.94995E-05	5.16846E-01
3.7200E+02	2.1544E+00	1.95300E-04	6.93210E-05	5.17237E-01
3.7400E+02	2.1314E+00	2.43338E-04	6.96885E-05	5.17723E-01
3.7600E+02	2.1087E+00	1.89599E-04	6.92790E-05	5.18102E-01
3.7800E+02	2.0864E+00	1.55348E-04	6.90270E-05	5.18413E-01
3.8000E+02	2.0644E+00	1.15826E-04	6.87225E-05	5.18645E-01
3.8200E+02	2.0428E+00	1.01388E-04	6.86070E-05	5.18848E-01
3.8400E+02	2.0215E+00	1.14481E-04	6.87120E-05	5.19076E-01
3.8600E+02	2.0005E+00	1.27123E-04	6.88065E-05	5.19331E-01
3.8800E+02	1.9799E+00	1.18125E-04	6.87435E-05	5.19567E-01
3.9000E+02	1.9596E+00	1.53993E-04	6.90165E-05	5.19875E-01
3.9200E+02	1.9395E+00	1.42369E-04	6.89220E-05	5.20160E-01
3.9400E+02	1.9198E+00	1.50580E-04	6.89850E-05	5.20461E-01
3.9600E+02	1.9004E+00	1.05388E-04	6.86385E-05	5.20672E-01
3.9800E+02	1.8813E+00	8.48610E-05	6.84810E-05	5.20841E-01
4.0000E+02	1.8625E+00	7.56840E-05	6.84180E-05	5.20993E-01
4.0200E+02	1.8440E+00	7.98945E-05	6.84495E-05	5.21153E-01
4.0400E+02	1.8257E+00	5.42955E-05	3.41250E-05	5.21261E-01
4.0600E+02	1.8077E+00	8.55225E-05	6.84915E-05	5.21432E-01
4.0800E+02	1.7900E+00	4.92240E-05	3.41040E-05	5.21531E-01
4.1000E+02	1.7725E+00	4.51815E-05	3.40935E-05	5.21621E-01
4.1200E+02	1.7553E+00	5.98395E-05	3.41460E-05	5.21741E-01
4.1400E+02	1.7383E+00	7.69230E-05	6.84285E-05	5.21894E-01

Polyethylene 3.5 m.f.p.

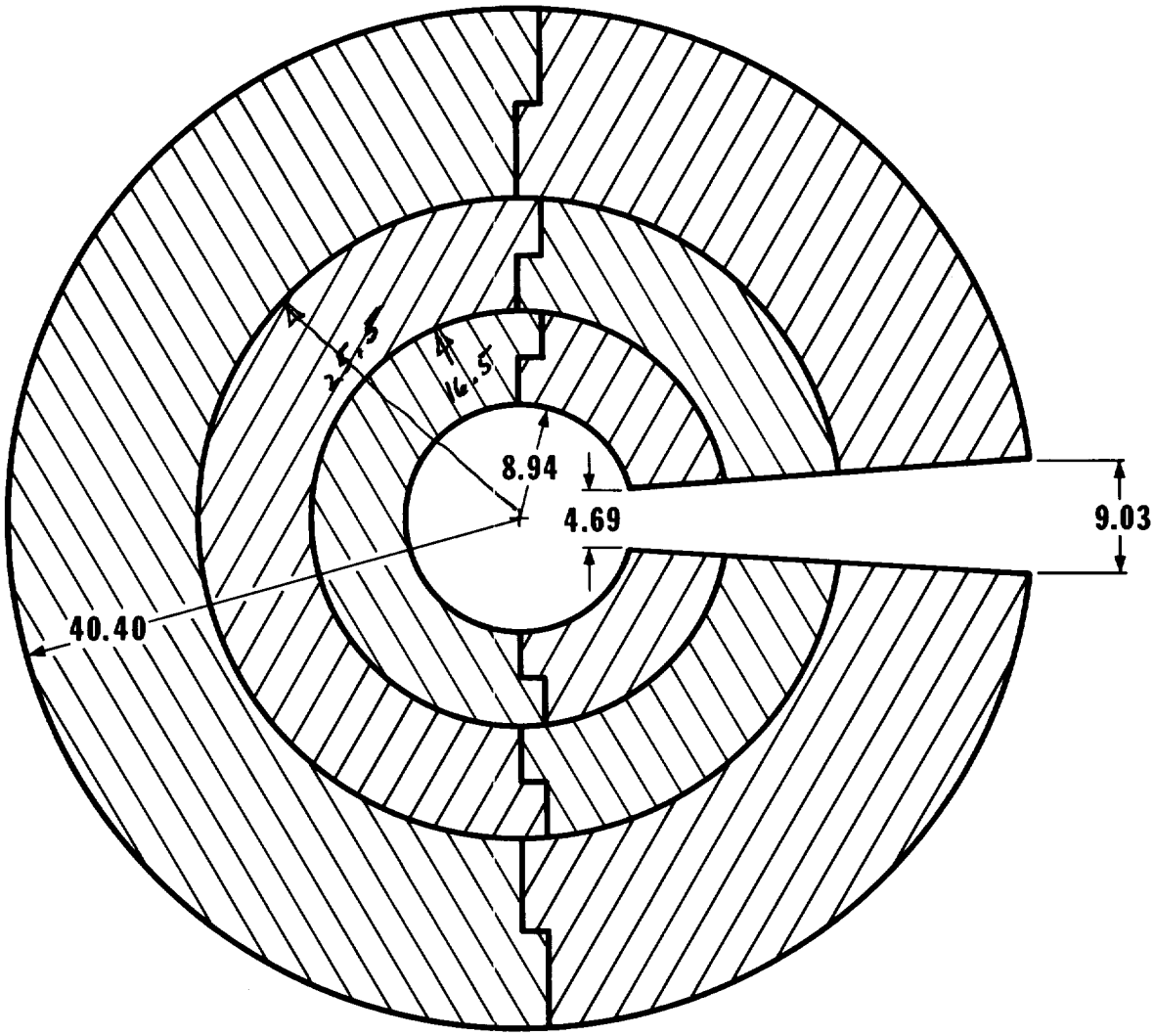

All Dimensions in Centimeters

$\rho = 0.92\ g/cm^3$

Material	Atomic %
H	66.7
C	33.3

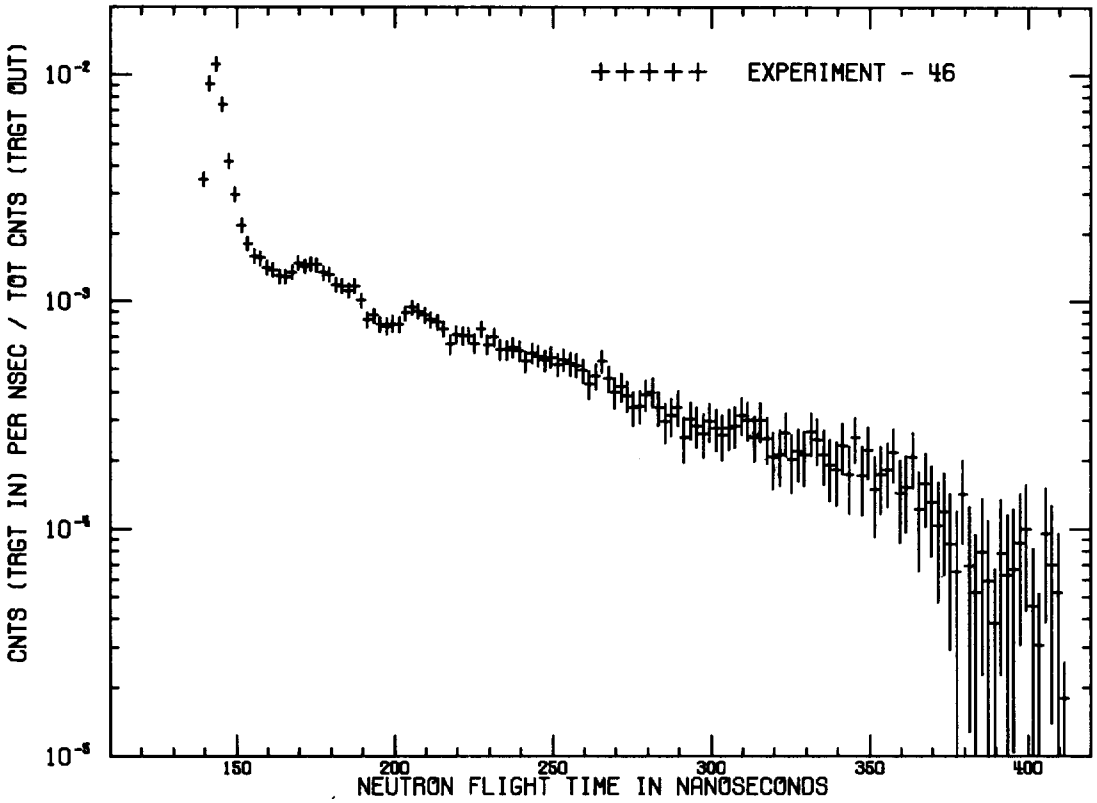

POLYETHYLENE - 3.5 M.F.P. - 30 DEG.

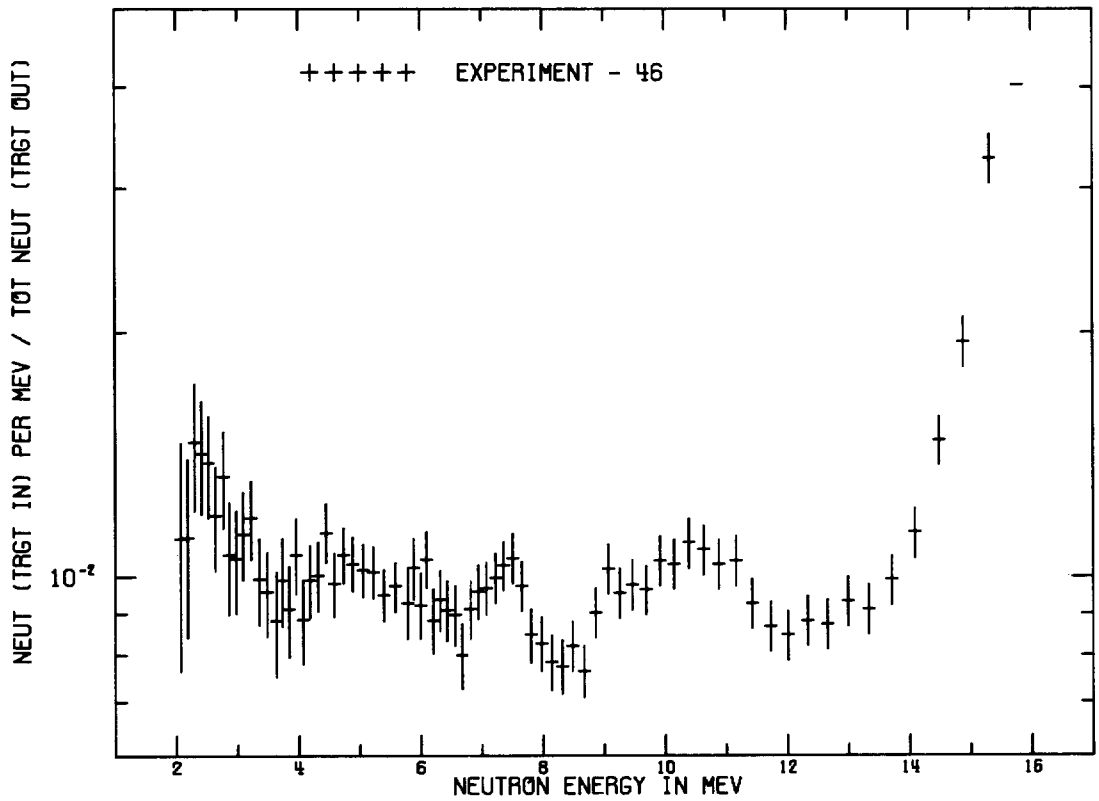

POLYETHYLENE - 3.5 M.F.P. - 30 DEG.

(9)

POLYETHYLENE - 3.5 M.F.P. - 30 DEG.
FLIGHTPATH = 765.00 CM DETECTOR = PILOT B FWHM = 4 NS

TIME(NS)	CALCULATED ENERGY(MEV)	CNT/NS/SOURCE	ERROR	INTEGRAL
1.3500E+02	1.7245E+01	4.48745E-04	5.85750E-05	8.97490E-04
1.3700E+02	1.6732E+01	3.45500E-03	7.58700E-05	7.80749E-03
1.3900E+02	1.6242E+01	9.14500E-03	1.00780E-04	2.60975E-02
1.4100E+02	1.5773E+01	1.11310E-02	1.08130E-04	4.83595E-02
1.4300E+02	1.5324E+01	7.42900E-03	9.39650E-05	6.32175E-02
1.4500E+02	1.4894E+01	4.17485E-03	7.94500E-05	7.15672E-02
1.4700E+02	1.4482E+01	2.97925E-03	7.34050E-05	7.75257E-02
1.4900E+02	1.4087E+01	2.16755E-03	6.89950E-05	8.18608E-02
1.5100E+02	1.3708E+01	1.79355E-03	6.68650E-05	8.54479E-02
1.5300E+02	1.3345E+01	1.57610E-03	6.55950E-05	8.86001E-02
1.5500E+02	1.2995E+01	1.55490E-03	6.54700E-05	9.17099E-02
1.5700E+02	1.2660E+01	1.40960E-03	6.46050E-05	9.45291E-02
1.5900E+02	1.2337E+01	1.38045E-03	6.44300E-05	9.72900E-02
1.6100E+02	1.2026E+01	1.28935E-03	6.38850E-05	9.98687E-02
1.6300E+02	1.1728E+01	1.28660E-03	6.38650E-05	1.02442E-01
1.6500E+02	1.1440E+01	1.34135E-03	6.41950E-05	1.05125E-01
1.6700E+02	1.1163E+01	1.47475E-03	6.49950E-05	1.08074E-01
1.6900E+02	1.0895E+01	1.42945E-03	6.47250E-05	1.10933E-01
1.7100E+02	1.0638E+01	1.45440E-03	6.48750E-05	1.13842E-01
1.7300E+02	1.0389E+01	1.44895E-03	6.48400E-05	1.16740E-01
1.7500E+02	1.0149E+01	1.33470E-03	6.41550E-05	1.19409E-01
1.7700E+02	9.9174E+00	1.31560E-03	6.40400E-05	1.22040E-01
1.7900E+02	9.6936E+00	1.18250E-03	6.32350E-05	1.24405E-01
1.8100E+02	9.4773E+00	1.16820E-03	6.31450E-05	1.26742E-01
1.8300E+02	9.2682E+00	1.11560E-03	6.28250E-05	1.28973E-01
1.8500E+02	9.0660E+00	1.16660E-03	6.31350E-05	1.31306E-01
1.8700E+02	8.8704E+00	1.00825E-03	6.21600E-05	1.33323E-01
1.8900E+02	8.6811E+00	8.30500E-04	6.10450E-05	1.34984E-01
1.9100E+02	8.4978E+00	8.67450E-04	6.12750E-05	1.36718E-01
1.9300E+02	8.3202E+00	7.94000E-04	6.08100E-05	1.38306E-01
1.9500E+02	8.1482E+00	7.77150E-04	6.07050E-05	1.39861E-01
1.9700E+02	7.9815E+00	7.95000E-04	6.08150E-05	1.41451E-01
1.9900E+02	7.8199E+00	7.91550E-04	6.07950E-05	1.43034E-01
2.0100E+02	7.6631E+00	8.36750E-04	6.14000E-05	1.44807E-01
2.0300E+02	7.5111E+00	9.40050E-04	6.17350E-05	1.46687E-01
2.0500E+02	7.3635E+00	9.04900E-04	6.15100E-05	1.48497E-01
2.0700E+02	7.2203E+00	8.67850E-04	6.12800E-05	1.50233E-01
2.0900E+02	7.0812E+00	8.30500E-04	6.10450E-05	1.51894E-01
2.1100E+02	6.9461E+00	8.07700E-04	6.09000E-05	1.53509E-01
2.1300E+02	6.8148E+00	7.54150E-04	6.05650E-05	1.55018E-01
2.1500E+02	6.6873E+00	6.47900E-04	5.98750E-05	1.56313E-01
2.1700E+02	6.5633E+00	7.13150E-04	6.02950E-05	1.57740E-01
2.1900E+02	6.4427E+00	7.05050E-04	6.02450E-05	1.59150E-01
2.2100E+02	6.3255E+00	7.09100E-04	6.02700E-05	1.60568E-01
2.2300E+02	6.2114E+00	6.51300E-04	5.98950E-05	1.61871E-01

2.2500E+02	6.1004E+00	7.54700E-04	6.05600E-05	1.63380E-01
2.2700E+02	5.9924E+00	6.44550E-04	5.98550E-05	1.64669E-01
2.2900E+02	5.8872E+00	6.97250E-04	6.01950E-05	1.66064E-01
2.3100E+02	5.7847E+00	6.14550E-04	5.96600E-05	1.67293E-01
2.3300E+02	5.6849E+00	6.09800E-04	5.96300E-05	1.68512E-01
2.3500E+02	5.5877E+00	6.27150E-04	5.97400E-05	1.69767E-01
2.3700E+02	5.4930E+00	6.05150E-04	5.96000E-05	1.70977E-01
2.3900E+02	5.4006E+00	5.42850E-04	5.91900E-05	1.72063E-01
2.4100E+02	5.3106E+00	5.92200E-04	5.95150E-05	1.73247E-01
2.4300E+02	5.2228E+00	5.74750E-04	5.94000E-05	1.74397E-01
2.4500E+02	5.1372E+00	5.49100E-04	5.92350E-05	1.75495E-01
2.4700E+02	5.0537E+00	5.67950E-04	5.93550E-05	1.76631E-01
2.4900E+02	4.9722E+00	5.28350E-04	5.91000E-05	1.77687E-01
2.5100E+02	4.8927E+00	5.51950E-04	5.92500E-05	1.78791E-01
2.5300E+02	4.8150E+00	5.30050E-04	5.91100E-05	1.79851E-01
2.5500E+02	4.7392E+00	5.23400E-04	5.90650E-05	1.80898E-01
2.5700E+02	4.6652E+00	4.94165E-04	5.88750E-05	1.81887E-01
2.5900E+02	4.5929E+00	4.30345E-04	5.84550E-05	1.82747E-01
2.6100E+02	4.5223E+00	4.67710E-04	5.87000E-05	1.83683E-01
2.6300E+02	4.4533E+00	5.46300E-04	5.92150E-05	1.84775E-01
2.6500E+02	4.3858E+00	4.55700E-04	5.86200E-05	1.85687E-01
2.6700E+02	4.3199E+00	3.97180E-04	5.82350E-05	1.86481E-01
2.6900E+02	4.2555E+00	4.19510E-04	5.83800E-05	1.87320E-01
2.7100E+02	4.1925E+00	3.82950E-04	5.81400E-05	1.88086E-01
2.7300E+02	4.1309E+00	3.40160E-04	5.78550E-05	1.88766E-01
2.7500E+02	4.0706E+00	3.46425E-04	5.78950E-05	1.89459E-01
2.7700E+02	4.0117E+00	3.87520E-04	5.81700E-05	1.90234E-01
2.7900E+02	3.9540E+00	3.99115E-04	5.82450E-05	1.91032E-01
2.8100E+02	3.8976E+00	3.41140E-04	5.78600E-05	1.91715E-01
2.8300E+02	3.8423E+00	2.95865E-04	5.75550E-05	1.92306E-01
2.8500E+02	3.7883E+00	3.13560E-04	5.76750E-05	1.92933E-01
2.8700E+02	3.7353E+00	3.42455E-04	5.78700E-05	1.93618E-01
2.8900E+02	3.6835E+00	2.51705E-04	5.72600E-05	1.94122E-01
2.9100E+02	3.6328E+00	3.02570E-04	5.76000E-05	1.94727E-01
2.9300E+02	3.5831E+00	2.84100E-04	5.74750E-05	1.95295E-01
2.9500E+02	3.5344E+00	2.62085E-04	5.73300E-05	1.95819E-01
2.9700E+02	3.4867E+00	2.97965E-04	5.75700E-05	1.96415E-01
2.9900E+02	3.4399E+00	2.77040E-04	5.74300E-05	1.96969E-01
3.0100E+02	3.3941E+00	2.57875E-04	5.73000E-05	1.97485E-01
3.0300E+02	3.3492E+00	2.78160E-04	5.74350E-05	1.98041E-01
3.0500E+02	3.3052E+00	2.84760E-04	5.74800E-05	1.98611E-01
3.0700E+02	3.2620E+00	3.15525E-04	5.76900E-05	1.99242E-01
3.0900E+02	3.2197E+00	3.01860E-04	5.75950E-05	1.99846E-01
3.1100E+02	3.1782E+00	2.53540E-04	5.72700E-05	2.00353E-01
3.1300E+02	3.1376E+00	2.99585E-04	5.75800E-05	2.00952E-01
3.1500E+02	3.0976E+00	2.49920E-04	5.72450E-05	2.01452E-01
3.1700E+02	3.0585E+00	2.05925E-04	5.69500E-05	2.01864E-01
3.1900E+02	3.0201E+00	2.11925E-04	5.69900E-05	2.02287E-01

3.2100E+02	2.9824E+00	2.65685E-04	5.73550E-05	2.02819E-01
3.2300E+02	2.9454E+00	2.01470E-04	5.69200E-05	2.03222E-01
3.2500E+02	2.9091E+00	2.18120E-04	5.70300E-05	2.03658E-01
3.2700E+02	2.8734E+00	2.10915E-04	5.69850E-05	2.04080E-01
3.2900E+02	2.8385E+00	2.66830E-04	5.73600E-05	2.04614E-01
3.3100E+02	2.8041E+00	2.46640E-04	5.72250E-05	2.05107E-01
3.3300E+02	2.7704E+00	2.12690E-04	5.69950E-05	2.05532E-01
3.3500E+02	2.7373E+00	1.90045E-04	5.68400E-05	2.05912E-01
3.3700E+02	2.7047E+00	1.82780E-04	5.67900E-05	2.06278E-01
3.3900E+02	2.6728E+00	2.31380E-04	5.71200E-05	2.06741E-01
3.4100E+02	2.6414E+00	1.73090E-04	5.67250E-05	2.07087E-01
3.4300E+02	2.6105E+00	2.52110E-04	5.72600E-05	2.07591E-01
3.4500E+02	2.5802E+00	1.71830E-04	5.67150E-05	2.07935E-01
3.4700E+02	2.5504E+00	2.22680E-04	5.70650E-05	2.08380E-01
3.4900E+02	2.5212E+00	1.49235E-04	5.65650E-05	2.08678E-01
3.5100E+02	2.4924E+00	1.73955E-04	5.67300E-05	2.09026E-01
3.5300E+02	2.4641E+00	1.81780E-04	5.67850E-05	2.09390E-01
3.5500E+02	2.4363E+00	2.17320E-04	5.70250E-05	2.09825E-01
3.5700E+02	2.4090E+00	1.43135E-04	5.65200E-05	2.10111E-01
3.5900E+02	2.3822E+00	1.52810E-04	5.65850E-05	2.10416E-01
3.6100E+02	2.3557E+00	2.07050E-04	5.69550E-05	2.10831E-01
3.6300E+02	2.3297E+00	1.21470E-04	5.63750E-05	2.11074E-01
3.6500E+02	2.3042E+00	1.58565E-04	5.66250E-05	2.11391E-01
3.6700E+02	2.2791E+00	1.31635E-04	5.64400E-05	2.11654E-01
3.6900E+02	2.2543E+00	1.03875E-04	5.62500E-05	2.11862E-01
3.7100E+02	2.2300E+00	1.19265E-04	5.63600E-05	2.12100E-01
3.7300E+02	2.2061E+00	8.55450E-05	5.61250E-05	2.12271E-01
3.7500E+02	2.1825E+00	6.47500E-05	5.59800E-05	2.12401E-01
3.7700E+02	2.1593E+00	1.42455E-04	5.65150E-05	2.12686E-01
3.7900E+02	2.1365E+00	6.88100E-05	5.60100E-05	2.12823E-01
3.8100E+02	2.1141E+00	5.24400E-05	5.58950E-05	2.12928E-01
3.8300E+02	2.0920E+00	7.88750E-05	5.60800E-05	2.13086E-01
3.8500E+02	2.0702E+00	5.91400E-05	5.59450E-05	2.13204E-01
3.8700E+02	2.0488E+00	3.83435E-05	5.58000E-05	2.13281E-01
3.8900E+02	2.0277E+00	7.87150E-05	5.60800E-05	2.13438E-01
3.9100E+02	2.0070E+00	6.25350E-05	5.59650E-05	2.13563E-01
3.9300E+02	1.9866E+00	6.63050E-05	5.59950E-05	2.13696E-01
3.9500E+02	1.9664E+00	8.67350E-05	5.61350E-05	2.13869E-01
3.9700E+02	1.9466E+00	9.98100E-05	5.62250E-05	2.14069E-01
3.9900E+02	1.9271E+00	4.58815E-05	5.58500E-05	2.14161E-01
4.0100E+02	1.9078E+00	3.08890E-05	5.57500E-05	2.14223E-01
4.0300E+02	1.8889E+00	9.51850E-05	5.61900E-05	2.14413E-01
4.0500E+02	1.8702E+00	6.99150E-05	5.60200E-05	2.14553E-01
4.0700E+02	1.8518E+00	5.28800E-05	5.59000E-05	2.14659E-01
4.0900E+02	1.8337E+00	1.79215E-05	5.56600E-05	2.14694E-01

Teflon 0.9 m. f. p.

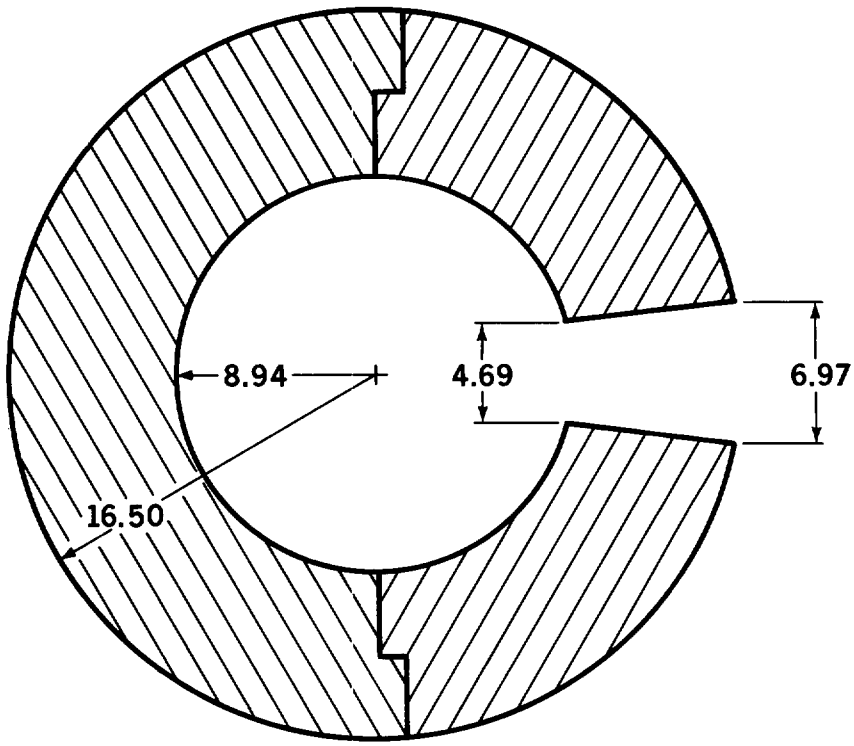

All Dimensions in Centimeters

$\rho = 2.22\ g/cm^3$

material	Atomic %
F	66.7
C	33.3

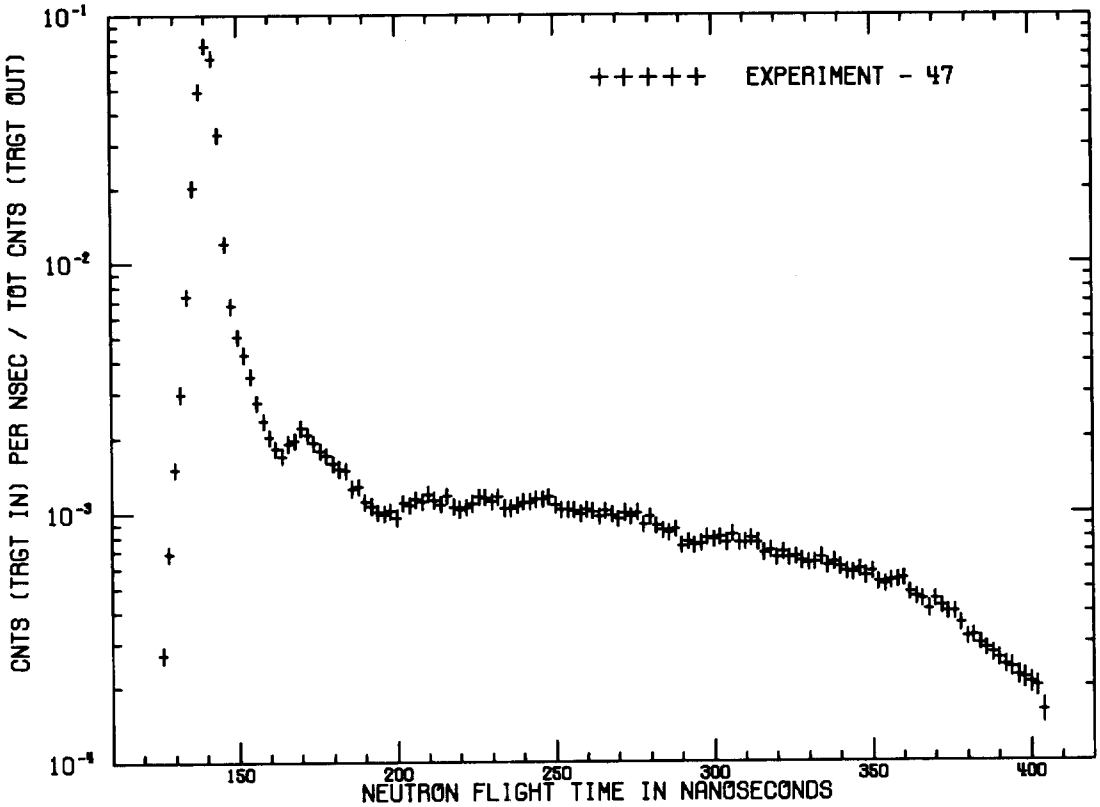

TEFLON - 0.9 M.F.P. - 30 DEG.

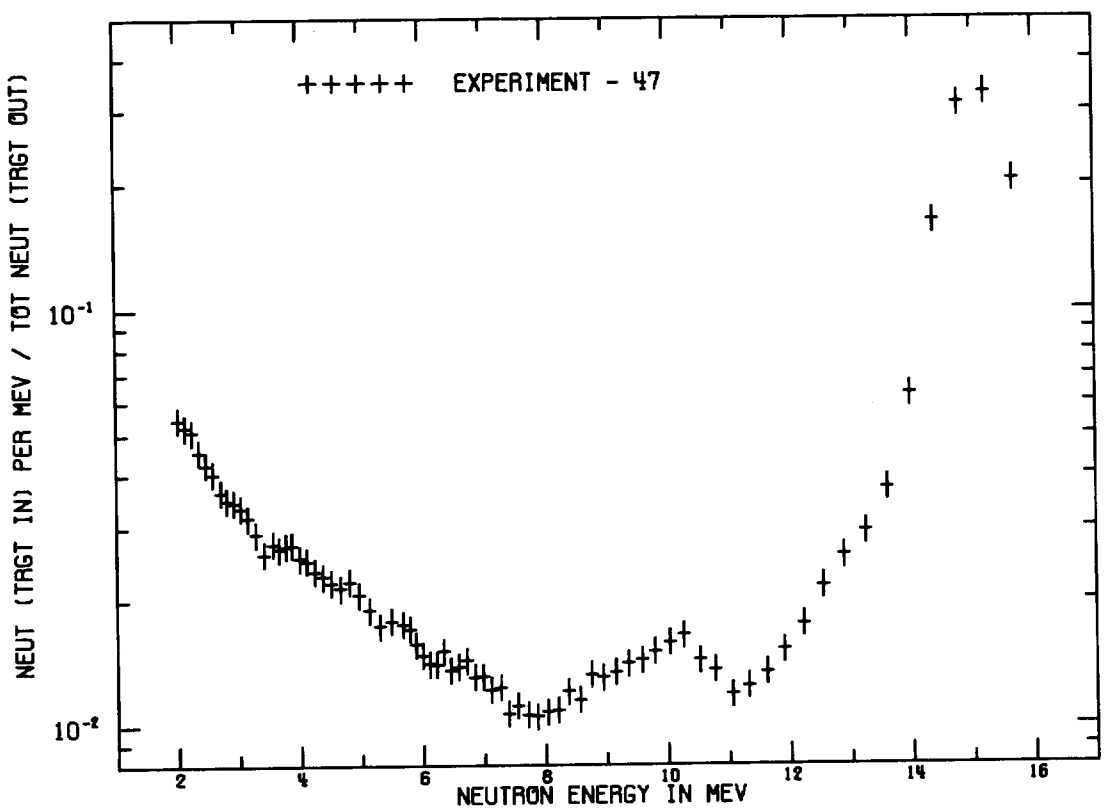

TEFLON - 0.9 M.F.P. - 30 DEG.

TEFLON - 0.9 M.F.P. - 30 DEG.
FLIGHTPATH = 752.00 CM DETECTOR = PILOT B FWHM = 6 NS

TIME(NS)	CALCULATED ENERGY(MEV)	CNT/NS/SOURCE	ERROR	INTEGRAL
1.2500E+02	1.9506E+01	8.36200E-05	1.62800E-05	1.67240E-04
1.2700E+02	1.8878E+01	2.69360E-04	1.99800E-05	7.05960E-04
1.2900E+02	1.8280E+01	6.87460E-04	2.66400E-05	2.08088E-03
1.3100E+02	1.7710E+01	1.48888E-03	3.55200E-05	5.05864E-03
1.3300E+02	1.7167E+01	2.99108E-03	4.88400E-05	1.10408E-02
1.3500E+02	1.6649E+01	7.36300E-03	7.47400E-05	2.57668E-02
1.3700E+02	1.6154E+01	2.01865E-02	1.22840E-04	6.61397E-02
1.3900E+02	1.5681E+01	4.92389E-02	1.90920E-04	1.64617E-01
1.4100E+02	1.5228E+01	7.53564E-02	2.36060E-04	3.15330E-01
1.4300E+02	1.4795E+01	6.70477E-02	2.22740E-04	4.49426E-01
1.4500E+02	1.4380E+01	3.29922E-02	1.56880E-04	5.15410E-01
1.4700E+02	1.3983E+01	1.20006E-02	9.47200E-05	5.39411E-01
1.4900E+02	1.3602E+01	6.75768E-03	7.17800E-05	5.52927E-01
1.5100E+02	1.3236E+01	5.08676E-03	6.29000E-05	5.63100E-01
1.5300E+02	1.2886E+01	4.29274E-03	5.77200E-05	5.71686E-01
1.5500E+02	1.2549E+01	3.51426E-03	5.25400E-05	5.78714E-01
1.5700E+02	1.2225E+01	2.76094E-03	4.73600E-05	5.84236E-01
1.5900E+02	1.1913E+01	2.33100E-03	4.36600E-05	5.88898E-01
1.6100E+02	1.1614E+01	2.00244E-03	4.07000E-05	5.92903E-01
1.6300E+02	1.1325E+01	1.80856E-03	3.92200E-05	5.96520E-01
1.6500E+02	1.1047E+01	1.68572E-03	3.77400E-05	5.99891E-01
1.6700E+02	1.0780E+01	1.89218E-03	3.99600E-05	6.03676E-01
1.6900E+02	1.0522E+01	1.94620E-03	3.99600E-05	6.07568E-01
1.7100E+02	1.0273E+01	2.19040E-03	4.21800E-05	6.11949E-01
1.7300E+02	1.0033E+01	2.05054E-03	4.14400E-05	6.16050E-01
1.7500E+02	9.8017E+00	1.90180E-03	3.99600E-05	6.19854E-01
1.7700E+02	9.5781E+00	1.76712E-03	3.84800E-05	6.23388E-01
1.7900E+02	9.3620E+00	1.69016E-03	3.77400E-05	6.26768E-01
1.8100E+02	9.1533E+00	1.57694E-03	3.70000E-05	6.29922E-01
1.8300E+02	8.9514E+00	1.49702E-03	3.62600E-05	6.32916E-01
1.8500E+02	8.7562E+00	1.47926E-03	3.55200E-05	6.35875E-01
1.8700E+02	8.5674E+00	1.24986E-03	3.33000E-05	6.38374E-01
1.8900E+02	8.3846E+00	1.27280E-03	3.33000E-05	6.40920E-01
1.9100E+02	8.2076E+00	1.10926E-03	3.18200E-05	6.43138E-01
1.9300E+02	8.0362E+00	1.06412E-03	3.10800E-05	6.45267E-01
1.9500E+02	7.8702E+00	1.00714E-03	3.10800E-05	6.47281E-01
1.9700E+02	7.7092E+00	9.90120E-04	3.03400E-05	6.49261E-01
1.9900E+02	7.5532E+00	1.01750E-03	3.03400E-05	6.51296E-01
2.0100E+02	7.4018E+00	9.57560E-04	2.96000E-05	6.53211E-01
2.0300E+02	7.2550E+00	1.09594E-03	3.18200E-05	6.55403E-01
2.0500E+02	7.1125E+00	1.07078E-03	3.10800E-05	6.57545E-01
2.0700E+02	6.9742E+00	1.12850E-03	3.18200E-05	6.59802E-01
2.0900E+02	6.8399E+00	1.10630E-03	3.18200E-05	6.62014E-01
2.1100E+02	6.7095E+00	1.18622E-03	3.25600E-05	6.64387E-01
2.1300E+02	6.5828E+00	1.12406E-03	3.18200E-05	6.66635E-01

2.1500E+02	6.4596E+00	1.07818E-03	3.10800E-05	6.68791E-01
2.1700E+02	6.3399E+00	1.16698E-03	3.25600E-05	6.71125E-01
2.1900E+02	6.2235E+00	1.05598E-03	3.10800E-05	6.73237E-01
2.2100E+02	6.1102E+00	1.03156E-03	3.10800E-05	6.75300E-01
2.2300E+02	6.0001E+00	1.05228E-03	3.10800E-05	6.77405E-01
2.2500E+02	5.8929E+00	1.08854E-03	3.18200E-05	6.79582E-01
2.2700E+02	5.7886E+00	1.15144E-03	3.25600E-05	6.81885E-01
2.2900E+02	5.6870E+00	1.14996E-03	3.18200E-05	6.84185E-01
2.3100E+02	5.5880E+00	1.10482E-03	3.18200E-05	6.86394E-01
2.3300E+02	5.4917E+00	1.15662E-03	3.25600E-05	6.88708E-01
2.3500E+02	5.3978E+00	1.04340E-03	3.10800E-05	6.90794E-01
2.3700E+02	5.3063E+00	1.04192E-03	3.10800E-05	6.92878E-01
2.3900E+02	5.2171E+00	1.06634E-03	3.10800E-05	6.95011E-01
2.4100E+02	5.1302E+00	1.10260E-03	3.18200E-05	6.97216E-01
2.4300E+02	5.0454E+00	1.10186E-03	3.18200E-05	6.99420E-01
2.4500E+02	4.9627E+00	1.13294E-03	3.18200E-05	7.01686E-01
2.4700E+02	4.8821E+00	1.13072E-03	3.18200E-05	7.03947E-01
2.4900E+02	4.8034E+00	1.15588E-03	3.25600E-05	7.06259E-01
2.5100E+02	4.7265E+00	1.07522E-03	3.10800E-05	7.08409E-01
2.5300E+02	4.6515E+00	1.02564E-03	3.10800E-05	7.10461E-01
2.5500E+02	4.5783E+00	1.02860E-03	3.10800E-05	7.12518E-01
2.5700E+02	4.5068E+00	1.02342E-03	3.03400E-05	7.14565E-01
2.5900E+02	4.4370E+00	9.87900E-04	3.03400E-05	7.16541E-01
2.6100E+02	4.3688E+00	1.02564E-03	3.10800E-05	7.18592E-01
2.6300E+02	4.3022E+00	1.01084E-03	3.03400E-05	7.20613E-01
2.6500E+02	4.2370E+00	9.60520E-04	2.96000E-05	7.22535E-01
2.6700E+02	4.1734E+00	1.01380E-03	3.03400E-05	7.24562E-01
2.6900E+02	4.1111E+00	9.79760E-04	3.03400E-05	7.26522E-01
2.7100E+02	4.0503E+00	9.40540E-04	2.96000E-05	7.28403E-01
2.7300E+02	3.9908E+00	9.99000E-04	3.03400E-05	7.30401E-01
2.7500E+02	3.9326E+00	9.62740E-04	3.03400E-05	7.32326E-01
2.7700E+02	3.8756E+00	1.00122E-03	3.03400E-05	7.34329E-01
2.7900E+02	3.8199E+00	8.93180E-04	2.88600E-05	7.36115E-01
2.8100E+02	3.7654E+00	9.60520E-04	2.96000E-05	7.38036E-01
2.8300E+02	3.7121E+00	8.82080E-04	2.88600E-05	7.39800E-01
2.8500E+02	3.6599E+00	8.47300E-04	2.88600E-05	7.41495E-01
2.8700E+02	3.6087E+00	8.28060E-04	2.81200E-05	7.43151E-01
2.8900E+02	3.5587E+00	8.58400E-04	2.88600E-05	7.44868E-01
2.9100E+02	3.5097E+00	7.35560E-04	2.73800E-05	7.46339E-01
2.9300E+02	3.4616E+00	7.59980E-04	2.73800E-05	7.47859E-01
2.9500E+02	3.4146E+00	7.40000E-04	2.73800E-05	7.49339E-01
2.9700E+02	3.3685E+00	7.50360E-04	2.73800E-05	7.50840E-01
2.9900E+02	3.3234E+00	7.92540E-04	2.81200E-05	7.52425E-01
3.0100E+02	3.2791E+00	7.79960E-04	1.99800E-05	7.53985E-01
3.0300E+02	3.2358E+00	7.94020E-04	2.81200E-05	7.55573E-01
3.0500E+02	3.1932E+00	7.57020E-04	2.73800E-05	7.57087E-01
3.0700E+02	3.1516E+00	8.16960E-04	2.81200E-05	7.58721E-01
3.0900E+02	3.1107E+00	7.53320E-04	2.73800E-05	7.60227E-01

3.1100E+02	3.0706E+00	7.59240E-04	2.73800E-05	7.61746E-01
3.1300E+02	3.0313E+00	7.85880E-04	2.73800E-05	7.63317E-01
3.1500E+02	2.9928E+00	7.57760E-04	2.73800E-05	7.64833E-01
3.1700E+02	2.9549E+00	6.88940E-04	2.66400E-05	7.66211E-01
3.1900E+02	2.9178E+00	7.04480E-04	2.66400E-05	7.67620E-01
3.2100E+02	2.8814E+00	6.55640E-04	2.59000E-05	7.68931E-01
3.2300E+02	2.8457E+00	6.94120E-04	2.66400E-05	7.70319E-01
3.2500E+02	2.8106E+00	6.57120E-04	2.59000E-05	7.71634E-01
3.2700E+02	2.7762E+00	6.63780E-04	2.59000E-05	7.72961E-01
3.2900E+02	2.7424E+00	6.38620E-04	2.59000E-05	7.74238E-01
3.3100E+02	2.7092E+00	6.26780E-04	2.59000E-05	7.75492E-01
3.3300E+02	2.6766E+00	6.31220E-04	2.59000E-05	7.76754E-01
3.3500E+02	2.6446E+00	6.60080E-04	2.59000E-05	7.78074E-01
3.3700E+02	2.6132E+00	6.07540E-04	2.51600E-05	7.79290E-01
3.3900E+02	2.5823E+00	6.32700E-04	2.59000E-05	7.80555E-01
3.4100E+02	2.5520E+00	6.04580E-04	2.51600E-05	7.81764E-01
3.4300E+02	2.5222E+00	5.77200E-04	2.51600E-05	7.82919E-01
3.4500E+02	2.4929E+00	5.72760E-04	2.44200E-05	7.84064E-01
3.4700E+02	2.4642E+00	5.89040E-04	2.51600E-05	7.85242E-01
3.4900E+02	2.4359E+00	5.56480E-04	2.44200E-05	7.86355E-01
3.5100E+02	2.4081E+00	5.79420E-04	2.51600E-05	7.87514E-01
3.5300E+02	2.3808E+00	5.24660E-04	2.44200E-05	7.88563E-01
3.5500E+02	2.3539E+00	5.14300E-04	2.36800E-05	7.89592E-01
3.5700E+02	2.3275E+00	5.30580E-04	2.44200E-05	7.90653E-01
3.5900E+02	2.3016E+00	5.37980E-04	2.44200E-05	7.91729E-01
3.6100E+02	2.2761E+00	5.40940E-04	2.44200E-05	7.92811E-01
3.6300E+02	2.2510E+00	4.77300E-04	2.36800E-05	7.93765E-01
3.6500E+02	2.2263E+00	4.57320E-04	2.29400E-05	7.94680E-01
3.6700E+02	2.2020E+00	4.49180E-04	2.29400E-05	7.95578E-01
3.6900E+02	2.1781E+00	4.08480E-04	2.22000E-05	7.96395E-01
3.7100E+02	2.1546E+00	4.49180E-04	2.29400E-05	7.97294E-01
3.7300E+02	2.1315E+00	4.20320E-04	2.22000E-05	7.98134E-01
3.7500E+02	2.1087E+00	3.98860E-04	2.22000E-05	7.98932E-01
3.7700E+02	2.0863E+00	3.97380E-04	2.22000E-05	7.99727E-01
3.7900E+02	2.0643E+00	3.57420E-04	2.14600E-05	8.00442E-01
3.8100E+02	2.0426E+00	3.15980E-04	2.07200E-05	8.01074E-01
3.8300E+02	2.0213E+00	3.18200E-04	2.07200E-05	8.01710E-01
3.8500E+02	2.0003E+00	2.97480E-04	1.99800E-05	8.02305E-01
3.8700E+02	1.9796E+00	2.84160E-04	1.99800E-05	8.02873E-01
3.8900E+02	1.9592E+00	2.70840E-04	1.99800E-05	8.03415E-01
3.9100E+02	1.9392E+00	2.58260E-04	1.99800E-05	8.03932E-01
3.9300E+02	1.9194E+00	2.42720E-04	1.92400E-05	8.04417E-01
3.9500E+02	1.9000E+00	2.37540E-04	1.92400E-05	8.04892E-01
3.9700E+02	1.8808E+00	2.20520E-04	1.92400E-05	8.05333E-01
3.9900E+02	1.8619E+00	2.14600E-04	1.85000E-05	8.05762E-01
4.0100E+02	1.8434E+00	2.06460E-04	1.85000E-05	8.06175E-01
4.0300E+02	1.8251E+00	1.99060E-04	1.85000E-05	8.06573E-01
4.0500E+02	1.8070E+00	1.59840E-04	1.77600E-05	8.06893E-01

Teflon 1.8 m. f. p.

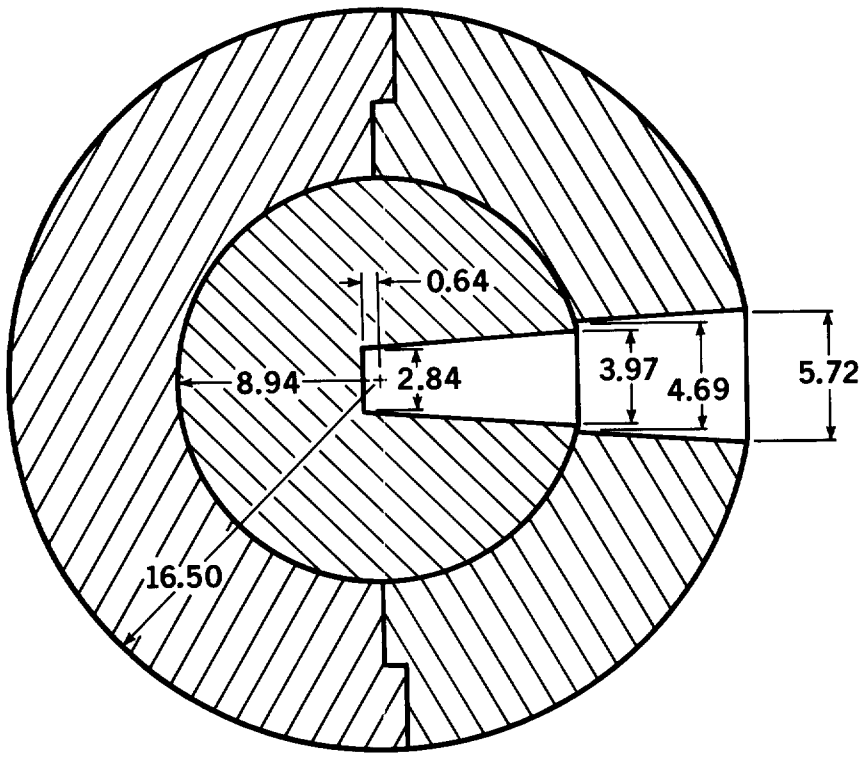

All Dimensions in Centimeters

$\rho = 2.22\ g/cm^3$

Material	Atomic %
F	66.7
C	33.3

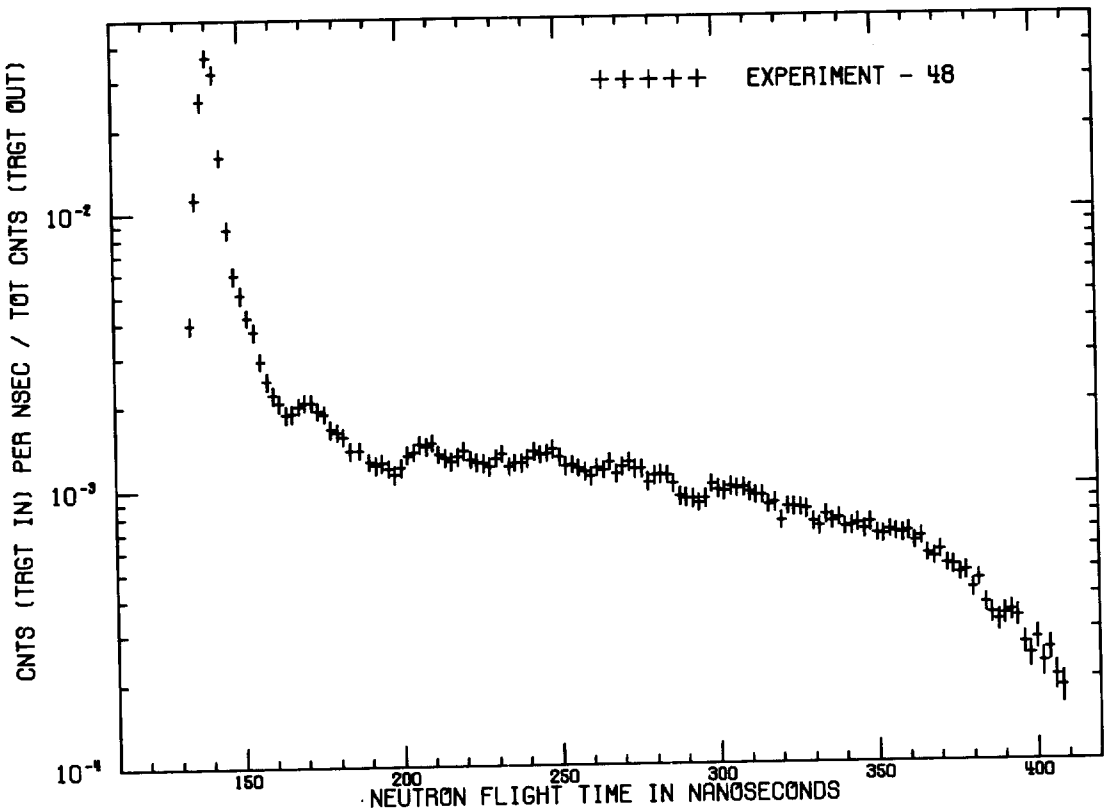

TEFLON - 1.8 M.F.P. - 30 DEG.

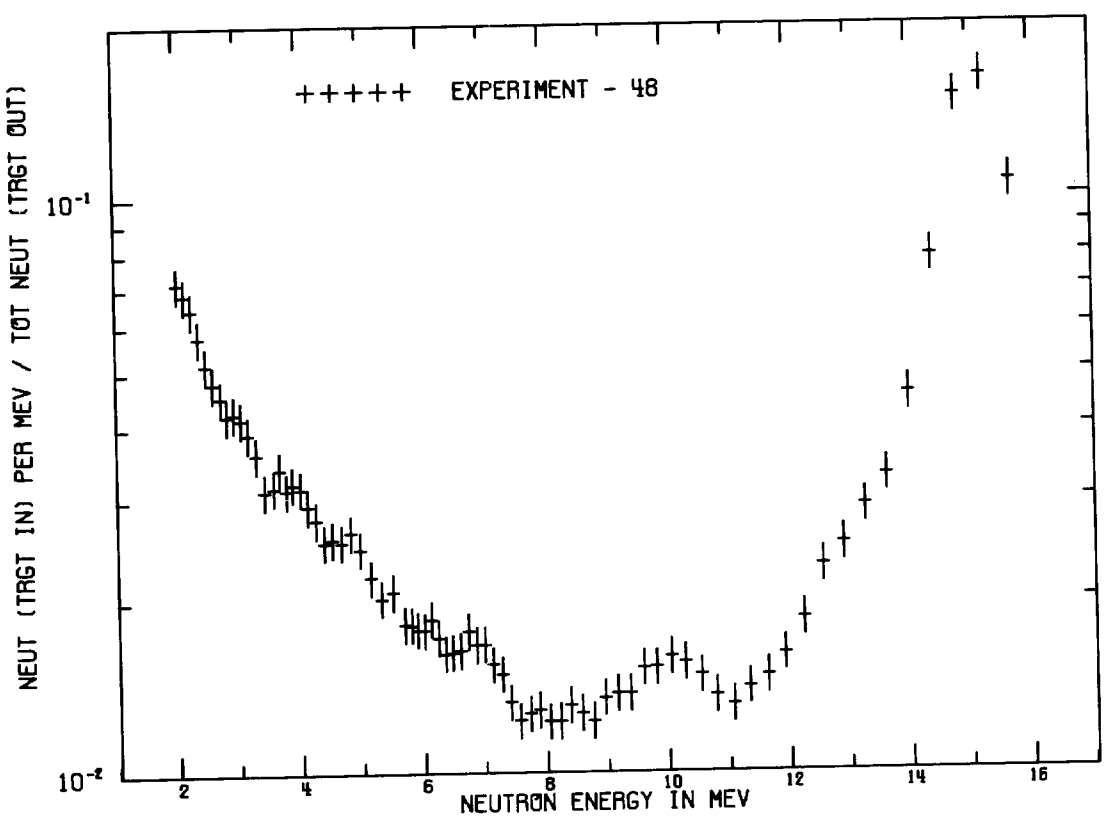

TEFLON - 1.8 M.F.P. - 30 DEG.

TEFLON - 1.8 M.F.P. - 30 DEG.
FLIGHTPATH = 752.00 CM DETECTOR = PILOT B FWHM = 6 NS

TIME(NS)	CALCULATED ENERGY(MEV)	CNT/NS/SOURCE	ERROR	INTEGRAL
1.3300E+02	1.7167E+01	1.68178E-03	5.05800E-05	3.36357E-03
1.3500E+02	1.6649E+01	3.93821E-03	7.58700E-05	1.12400E-02
1.3700E+02	1.6154E+01	1.12077E-02	1.26450E-04	3.36554E-02
1.3900E+02	1.5681E+01	2.55921E-02	1.89675E-04	8.48395E-02
1.4100E+02	1.5228E+01	3.68995E-02	2.27610E-04	1.58639E-01
1.4300E+02	1.4795E+01	3.21155E-02	2.12155E-04	2.22870E-01
1.4500E+02	1.4380E+01	1.60381E-02	1.50335E-04	2.54946E-01
1.4700E+02	1.3983E+01	8.73769E-03	1.10995E-04	2.72421E-01
1.4900E+02	1.3602E+01	5.96563E-03	9.27300E-05	2.84352E-01
1.5100E+02	1.3236E+01	5.05238E-03	8.57050E-05	2.94457E-01
1.5300E+02	1.2886E+01	4.19954E-03	7.86800E-05	3.02856E-01
1.5500E+02	1.2549E+01	3.72044E-03	7.44650E-05	3.10297E-01
1.5700E+02	1.2225E+01	2.92240E-03	6.60350E-05	3.16142E-01
1.5900E+02	1.1913E+01	2.46999E-03	6.04150E-05	3.21082E-01
1.6100E+02	1.1614E+01	2.20164E-03	5.76050E-05	3.25485E-01
1.6300E+02	1.1325E+01	2.05270E-03	5.62000E-05	3.29591E-01
1.6500E+02	1.1047E+01	1.86584E-03	5.33900E-05	3.33322E-01
1.6700E+02	1.0780E+01	1.89254E-03	5.33900E-05	3.37107E-01
1.6900E+02	1.0522E+01	2.00634E-03	5.47950E-05	3.41120E-01
1.7100E+02	1.0273E+01	2.06535E-03	5.62000E-05	3.45251E-01
1.7300E+02	1.0033E+01	2.06395E-03	5.62000E-05	3.49379E-01
1.7500E+02	9.8017E+00	1.93047E-03	5.47950E-05	3.53239E-01
1.7700E+02	9.5781E+00	1.87848E-03	5.33900E-05	3.56996E-01
1.7900E+02	9.3620E+00	1.65088E-03	5.05800E-05	3.60298E-01
1.8100E+02	9.1533E+00	1.61294E-03	5.05800E-05	3.63524E-01
1.8300E+02	8.9514E+00	1.54972E-03	4.91750E-05	3.66624E-01
1.8500E+02	8.7562E+00	1.37409E-03	4.63650E-05	3.69372E-01
1.8700E+02	8.5674E+00	1.37831E-03	4.63650E-05	3.72128E-01
1.8900E+02	8.3846E+00	1.38393E-03	4.63650E-05	3.74896E-01
1.9100E+02	8.2076E+00	1.25607E-03	4.49600E-05	3.77408E-01
1.9300E+02	8.0362E+00	1.21392E-03	4.49600E-05	3.79836E-01
1.9500E+02	7.8702E+00	1.23640E-03	4.49600E-05	3.82309E-01
1.9700E+02	7.7092E+00	1.18442E-03	4.35550E-05	3.84678E-01
1.9900E+02	7.5532E+00	1.12822E-03	4.35550E-05	3.86934E-01
2.0100E+02	7.4018E+00	1.19004E-03	4.35550E-05	3.89314E-01
2.0300E+02	7.2550E+00	1.32070E-03	4.63650E-05	3.91956E-01
2.0500E+02	7.1125E+00	1.35723E-03	4.63650E-05	3.94670E-01
2.0700E+02	6.9742E+00	1.44434E-03	4.77700E-05	3.97559E-01
2.0900E+02	6.8399E+00	1.41484E-03	4.77700E-05	4.00388E-01
2.1100E+02	6.7095E+00	1.46682E-03	4.77700E-05	4.03322E-01
2.1300E+02	6.5828E+00	1.32913E-03	4.63650E-05	4.05980E-01
2.1500E+02	6.4596E+00	1.28698E-03	4.49600E-05	4.08554E-01
2.1700E+02	6.3399E+00	1.25045E-03	4.49600E-05	4.11055E-01
2.1900E+02	6.2235E+00	1.29963E-03	4.63650E-05	4.13654E-01
2.2100E+02	6.1102E+00	1.36144E-03	4.63650E-05	4.16377E-01

2.2300E+02	6.0001E+00	1.26731E-03	4.49600E-05	4.18912E-01
2.2500E+02	5.8929E+00	1.23640E-03	4.49600E-05	4.21385E-01
2.2700E+02	5.7886E+00	1.22516E-03	4.49600E-05	4.23835E-01
2.2900E+02	5.6870E+00	1.19425E-03	4.35550E-05	4.26224E-01
2.3100E+02	5.5880E+00	1.28277E-03	4.49600E-05	4.28789E-01
2.3300E+02	5.4917E+00	1.33194E-03	4.63650E-05	4.31453E-01
2.3500E+02	5.3978E+00	1.19004E-03	4.35550E-05	4.33833E-01
2.3700E+02	5.3063E+00	1.23218E-03	4.49600E-05	4.36297E-01
2.3900E+02	5.2171E+00	1.22797E-03	4.49600E-05	4.38753E-01
2.4100E+02	5.1302E+00	1.27714E-03	4.49600E-05	4.41308E-01
2.4300E+02	5.0454E+00	1.35021E-03	4.63650E-05	4.44008E-01
2.4500E+02	4.9627E+00	1.31789E-03	4.63650E-05	4.46644E-01
2.4700E+02	4.8821E+00	1.33054E-03	4.63650E-05	4.49305E-01
2.4900E+02	4.8034E+00	1.37690E-03	4.63650E-05	4.52059E-01
2.5100E+02	4.7265E+00	1.28838E-03	4.49600E-05	4.54636E-01
2.5300E+02	4.6515E+00	1.19004E-03	4.35550E-05	4.57016E-01
2.5500E+02	4.5783E+00	1.20830E-03	4.49600E-05	4.59432E-01
2.5700E+02	4.5068E+00	1.17599E-03	4.35550E-05	4.61784E-01
2.5900E+02	4.4370E+00	1.13665E-03	4.35550E-05	4.64057E-01
2.6100E+02	4.3688E+00	1.09309E-03	4.21500E-05	4.66244E-01
2.6300E+02	4.3022E+00	1.17318E-03	4.35550E-05	4.68590E-01
2.6500E+02	4.2370E+00	1.15210E-03	4.35550E-05	4.70894E-01
2.6700E+02	4.1734E+00	1.23078E-03	4.49600E-05	4.73356E-01
2.6900E+02	4.1111E+00	1.11557E-03	4.35550E-05	4.75587E-01
2.7100E+02	4.0503E+00	1.18301E-03	4.35550E-05	4.77953E-01
2.7300E+02	3.9908E+00	1.22657E-03	4.49600E-05	4.80406E-01
2.7500E+02	3.9326E+00	1.15632E-03	4.35550E-05	4.82719E-01
2.7700E+02	3.8756E+00	1.15632E-03	4.35550E-05	4.85031E-01
2.7900E+02	3.8199E+00	1.03970E-03	4.21500E-05	4.87111E-01
2.8100E+02	3.7654E+00	1.09169E-03	4.21500E-05	4.89294E-01
2.8300E+02	3.7121E+00	1.10573E-03	4.21500E-05	4.91506E-01
2.8500E+02	3.6599E+00	1.09871E-03	4.21500E-05	4.93703E-01
2.8700E+02	3.6087E+00	1.02143E-03	4.07450E-05	4.95746E-01
2.8900E+02	3.5587E+00	9.23085E-04	3.93400E-05	4.97592E-01
2.9100E+02	3.5097E+00	9.09035E-04	3.93400E-05	4.99410E-01
2.9300E+02	3.4616E+00	9.04820E-04	3.93400E-05	5.01220E-01
2.9500E+02	3.4146E+00	8.73910E-04	3.93400E-05	5.02968E-01
2.9700E+02	3.3685E+00	9.03415E-04	3.93400E-05	5.04774E-01
2.9900E+02	3.3234E+00	1.01863E-03	4.07450E-05	5.06812E-01
3.0100E+02	3.2791E+00	9.72260E-04	4.07450E-05	5.08756E-01
3.0300E+02	3.2358E+00	9.58210E-04	4.07450E-05	5.10673E-01
3.0500E+02	3.1932E+00	9.91930E-04	4.07450E-05	5.12656E-01
3.0700E+02	3.1516E+00	9.80690E-04	4.07450E-05	5.14618E-01
3.0900E+02	3.1107E+00	9.83500E-04	4.07450E-05	5.16585E-01
3.1100E+02	3.0706E+00	9.48375E-04	4.07450E-05	5.18482E-01
3.1300E+02	3.0313E+00	9.25895E-04	3.93400E-05	5.20333E-01
3.1500E+02	2.9928E+00	9.25895E-04	3.93400E-05	5.22185E-01
3.1700E+02	2.9549E+00	8.55645E-04	3.79350E-05	5.23896E-01

3.1900E+02	2.9178E+00	8.71100E-04	3.93400E-05	5.25639E-01
3.2100E+02	2.8814E+00	7.48865E-04	3.65300E-05	5.27136E-01
3.2300E+02	2.8457E+00	8.40190E-04	3.79350E-05	5.28817E-01
3.2500E+02	2.8106E+00	8.38785E-04	3.79350E-05	5.30494E-01
3.2700E+02	2.7762E+00	8.33165E-04	3.79350E-05	5.32161E-01
3.2900E+02	2.7424E+00	8.21925E-04	3.79350E-05	5.33804E-01
3.3100E+02	2.7092E+00	7.37625E-04	3.65300E-05	5.35280E-01
3.3300E+02	2.6766E+00	7.12335E-04	3.65300E-05	5.36704E-01
3.3500E+02	2.6446E+00	7.83990E-04	3.65300E-05	5.38272E-01
3.3700E+02	2.6132E+00	7.41840E-04	3.65300E-05	5.39756E-01
3.3900E+02	2.5823E+00	7.64320E-04	3.65300E-05	5.41285E-01
3.4100E+02	2.5520E+00	7.06715E-04	3.51250E-05	5.42698E-01
3.4300E+02	2.5222E+00	7.09525E-04	3.51250E-05	5.44117E-01
3.4500E+02	2.4929E+00	7.29195E-04	3.65300E-05	5.45576E-01
3.4700E+02	2.4642E+00	6.91260E-04	3.51250E-05	5.46958E-01
3.4900E+02	2.4359E+00	7.33410E-04	3.65300E-05	5.48425E-01
3.5100E+02	2.4081E+00	6.67375E-04	3.51250E-05	5.49760E-01
3.5300E+02	2.3808E+00	6.60350E-04	3.51250E-05	5.51080E-01
3.5500E+02	2.3539E+00	6.87045E-04	3.51250E-05	5.52454E-01
3.5700E+02	2.3275E+00	6.74400E-04	3.51250E-05	5.53803E-01
3.5900E+02	2.3016E+00	6.63160E-04	3.51250E-05	5.55130E-01
3.6100E+02	2.2761E+00	6.75805E-04	3.51250E-05	5.56481E-01
3.6300E+02	2.2510E+00	6.23820E-04	3.37200E-05	5.57729E-01
3.6500E+02	2.2263E+00	6.47705E-04	3.51250E-05	5.59024E-01
3.6700E+02	2.2020E+00	5.62000E-04	3.23150E-05	5.60148E-01
3.6900E+02	2.1781E+00	5.46545E-04	3.23150E-05	5.61241E-01
3.7100E+02	2.1546E+00	5.78860E-04	3.37200E-05	5.62399E-01
3.7300E+02	2.1315E+00	5.15635E-04	3.23150E-05	5.63430E-01
3.7500E+02	2.1087E+00	5.08510E-04	3.23150E-05	5.64448E-01
3.7700E+02	2.0863E+00	4.77700E-04	3.09100E-05	5.65403E-01
3.7900E+02	2.0643E+00	4.83320E-04	3.09100E-05	5.66370E-01
3.8100E+02	2.0426E+00	4.20095E-04	2.95050E-05	5.67210E-01
3.8300E+02	2.0213E+00	4.55220E-04	3.09100E-05	5.68120E-01
3.8500E+02	2.0003E+00	3.70920E-04	2.81000E-05	5.68862E-01
3.8700E+02	1.9796E+00	3.41415E-04	2.81000E-05	5.69545E-01
3.8900E+02	1.9592E+00	3.20340E-04	2.66950E-05	5.70186E-01
3.9100E+02	1.9392E+00	3.38605E-04	2.81000E-05	5.70863E-01
3.9300E+02	1.9194E+00	3.47035E-04	2.81000E-05	5.71557E-01
3.9500E+02	1.9000E+00	3.31580E-04	2.81000E-05	5.72220E-01
3.9700E+02	1.8808E+00	2.65545E-04	2.52900E-05	5.72751E-01
3.9900E+02	1.8619E+00	2.40255E-04	2.52900E-05	5.73232E-01
4.0100E+02	1.8434E+00	2.76785E-04	2.66950E-05	5.73785E-01
4.0300E+02	1.8251E+00	2.24800E-04	2.52900E-05	5.74235E-01
4.0500E+02	1.8070E+00	2.52900E-04	2.52900E-05	5.74741E-01
4.0700E+02	1.7893E+00	2.00915E-04	2.38850E-05	5.75142E-01
4.0900E+02	1.7718E+00	1.84055E-04	2.38850E-05	5.75510E-01

Teflon 2.9 m.f.p.

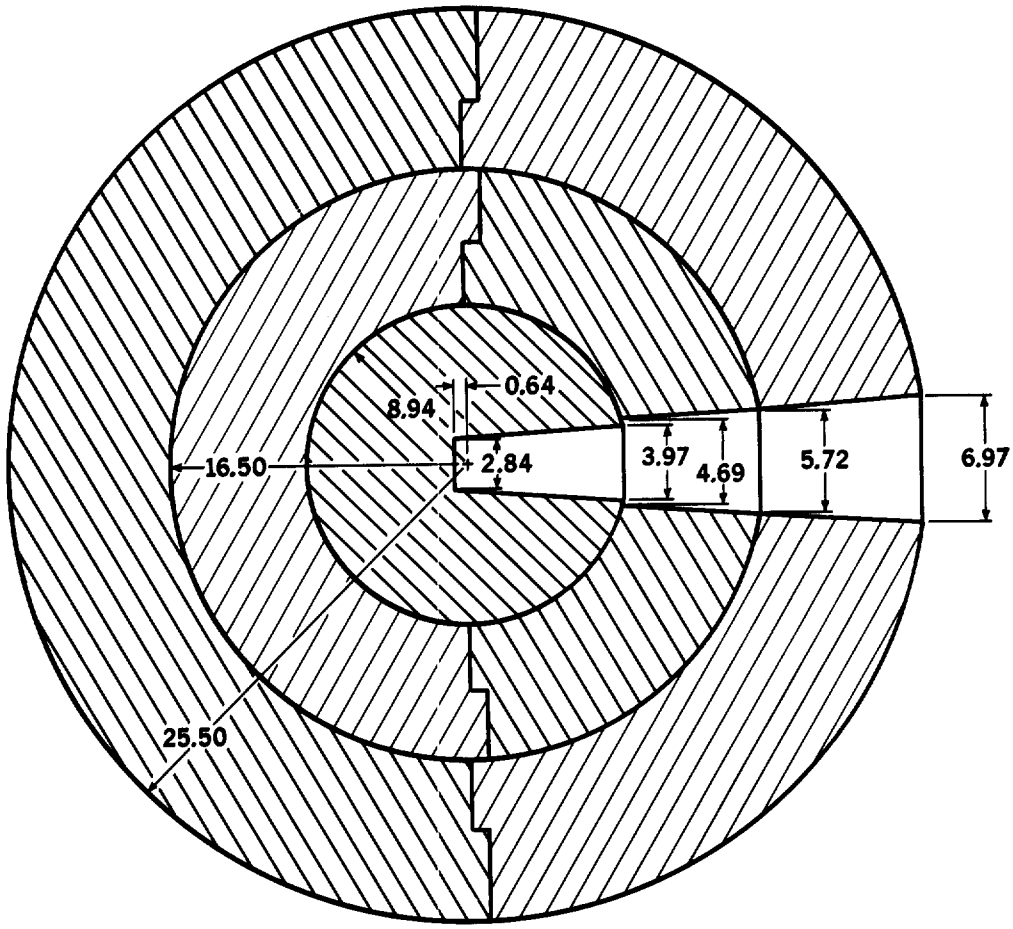

All Dimensions in Centimeters

$\rho = 2.22\ g/cm^3$

Material	Atomic %
F	66.7
C	33.3

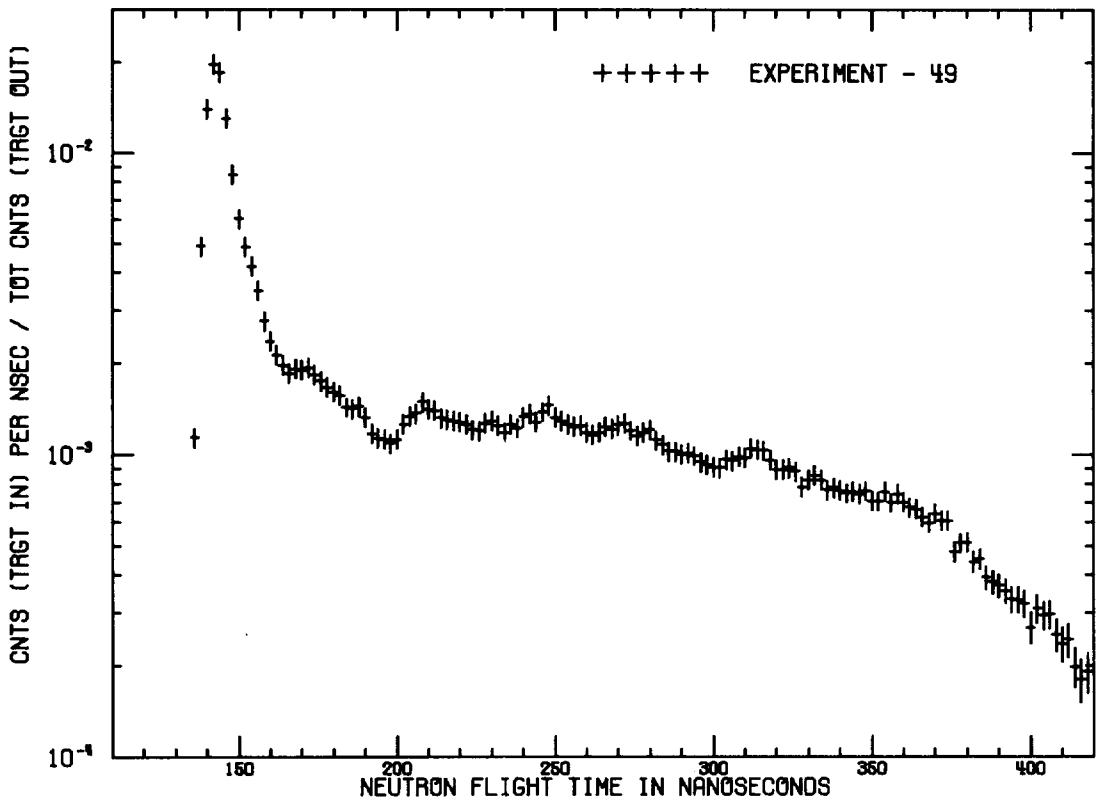

TEFLON - 2.9 M.F.P. - 30 DEG.

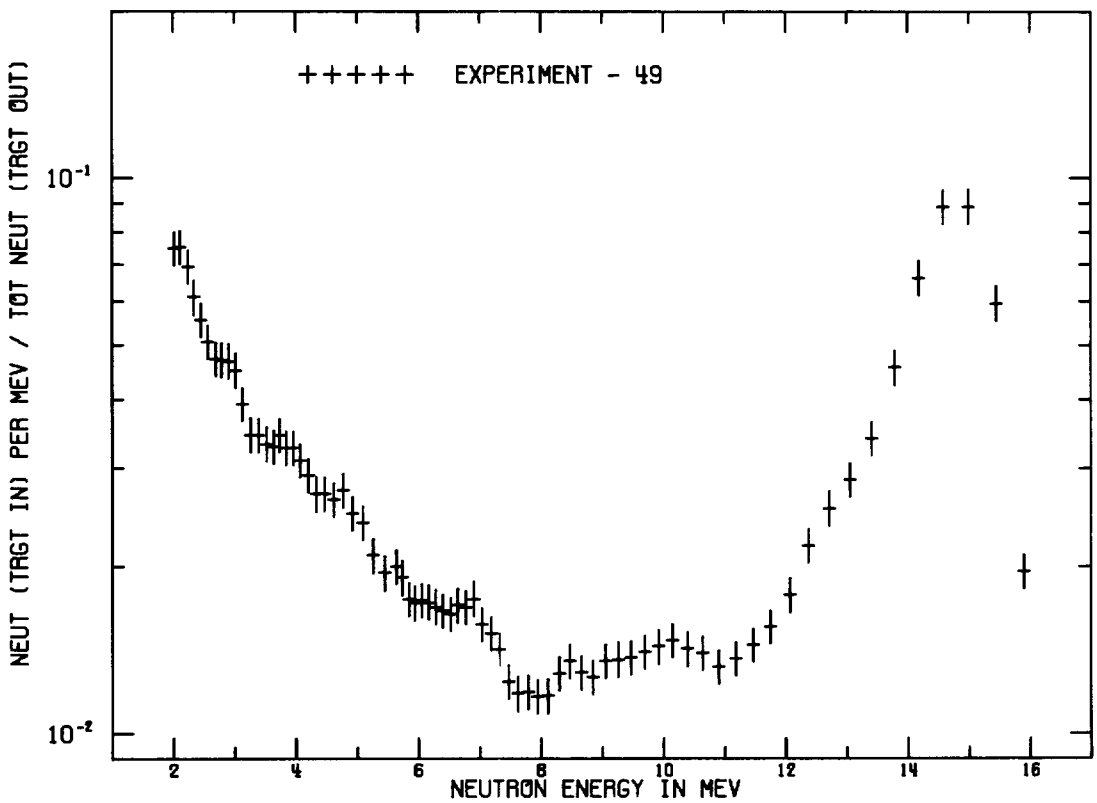

TEFLON - 2.9 M.F.P. - 30 DEG.

TEFLON - 2.9 M.F.P. - 30 DEG.
FLIGHTPATH = 752.00 CM DETECTOR = PILOT B FWHM = 6 NS

TIME(NS)	CALCULATED ENERGY(MEV)	CNT/NS/SOURCE	ERROR	INTEGRAL
1.3400E+02	1.6905E+01	9.45252E-05	2.74288E-05	1.89050E-04
1.3600E+02	1.6398E+01	1.13687E-03	4.52228E-05	2.46279E-03
1.3800E+02	1.5914E+01	4.89412E-03	8.18772E-05	1.22510E-02
1.4000E+02	1.5452E+01	1.39921E-02	1.34106E-04	4.02352E-02
1.4200E+02	1.5009E+01	1.97084E-02	1.58348E-04	7.96520E-02
1.4400E+02	1.4585E+01	1.85897E-02	1.53909E-04	1.16831E-01
1.4600E+02	1.4180E+01	1.30581E-02	1.29716E-04	1.42948E-01
1.4800E+02	1.3791E+01	8.50022E-03	1.05710E-04	1.59948E-01
1.5000E+02	1.3417E+01	6.03870E-03	9.01232E-05	1.72025E-01
1.5200E+02	1.3059E+01	4.88683E-03	8.18152E-05	1.81799E-01
1.5400E+02	1.2715E+01	4.19509E-03	7.63964E-05	1.90189E-01
1.5600E+02	1.2385E+01	3.48881E-03	7.04320E-05	1.97167E-01
1.5800E+02	1.2067E+01	2.76720E-03	6.37732E-05	2.02701E-01
1.6000E+02	1.1762E+01	2.36332E-03	5.97060E-05	2.07428E-01
1.6200E+02	1.1468E+01	2.13137E-03	5.72508E-05	2.11691E-01
1.6400E+02	1.1185E+01	1.96521E-03	5.54280E-05	2.15621E-01
1.6600E+02	1.0912E+01	1.85464E-03	5.41756E-05	2.19330E-01
1.6800E+02	1.0650E+01	1.91711E-03	5.48824E-05	2.23165E-01
1.7000E+02	1.0397E+01	1.90531E-03	5.47460E-05	2.26975E-01
1.7200E+02	1.0152E+01	1.93379E-03	5.50684E-05	2.30843E-01
1.7400E+02	9.9165E+00	1.83700E-03	5.39648E-05	2.34517E-01
1.7600E+02	9.6889E+00	1.75088E-03	5.29728E-05	2.38019E-01
1.7800E+02	9.4691E+00	1.66604E-03	5.19684E-05	2.41351E-01
1.8000E+02	9.2568E+00	1.61443E-03	5.13484E-05	2.44580E-01
1.8200E+02	9.0515E+00	1.56828E-03	5.07904E-05	2.47716E-01
1.8400E+02	8.8530E+00	1.43189E-03	4.90916E-05	2.50580E-01
1.8600E+02	8.6610E+00	1.41823E-03	4.89180E-05	2.53416E-01
1.8800E+02	8.4753E+00	1.44348E-03	4.92404E-05	2.56303E-01
1.9000E+02	8.2954E+00	1.32890E-03	4.77772E-05	2.58961E-01
1.9200E+02	8.1213E+00	1.17323E-03	4.57188E-05	2.61308E-01
1.9400E+02	7.9525E+00	1.13472E-03	4.51856E-05	2.63577E-01
1.9600E+02	7.7891E+00	1.12170E-03	4.50120E-05	2.65820E-01
1.9800E+02	7.6306E+00	1.08887E-03	4.45532E-05	2.67998E-01
2.0000E+02	7.4769E+00	1.12344E-03	4.50368E-05	2.70245E-01
2.0200E+02	7.3279E+00	1.26021E-03	4.68844E-05	2.72765E-01
2.0400E+02	7.1832E+00	1.34100E-03	4.79384E-05	2.75447E-01
2.0600E+02	7.0429E+00	1.36817E-03	4.82856E-05	2.78184E-01
2.0800E+02	6.9066E+00	1.49504E-03	4.98852E-05	2.81174E-01
2.1000E+02	6.7743E+00	1.41320E-03	4.88560E-05	2.84000E-01
2.1200E+02	6.6457E+00	1.39775E-03	4.86576E-05	2.86796E-01
2.1400E+02	6.5208E+00	1.31958E-03	4.76532E-05	2.89435E-01
2.1600E+02	6.3993E+00	1.30319E-03	4.74424E-05	2.92041E-01
2.1800E+02	6.2813E+00	1.29291E-03	4.73060E-05	2.94627E-01
2.2000E+02	6.1665E+00	1.28365E-03	4.71820E-05	2.97194E-01
2.2200E+02	6.0548E+00	1.26042E-03	4.68844E-05	2.99715E-01

2.2400E+02	5.9461E+00	1.21040E-03	4.62148E-05	3.02136E-01
2.2600E+02	5.8404E+00	1.19822E-03	4.60536E-05	3.04532E-01
2.2800E+02	5.7374E+00	1.27230E-03	4.70332E-05	3.07077E-01
2.3000E+02	5.6372E+00	1.29571E-03	4.73432E-05	3.09669E-01
2.3200E+02	5.5395E+00	1.24579E-03	4.66860E-05	3.12160E-01
2.3400E+02	5.4444E+00	1.18387E-03	4.58552E-05	3.14528E-01
2.3600E+02	5.3518E+00	1.26017E-03	4.68720E-05	3.17048E-01
2.3800E+02	5.2614E+00	1.22238E-03	4.63760E-05	3.19493E-01
2.4000E+02	5.1734E+00	1.33219E-03	4.78268E-05	3.22157E-01
2.4200E+02	5.0875E+00	1.36590E-03	4.82608E-05	3.24889E-01
2.4400E+02	5.0038E+00	1.28438E-03	4.71944E-05	3.27458E-01
2.4600E+02	4.9221E+00	1.38234E-03	4.84716E-05	3.30223E-01
2.4800E+02	4.8425E+00	1.45512E-03	4.93892E-05	3.33133E-01
2.5000E+02	4.7647E+00	1.33042E-03	4.78020E-05	3.35794E-01
2.5200E+02	4.6888E+00	1.29496E-03	4.73308E-05	3.38384E-01
2.5400E+02	4.6147E+00	1.26150E-03	4.68968E-05	3.40907E-01
2.5600E+02	4.5424E+00	1.23379E-03	4.65248E-05	3.43374E-01
2.5800E+02	4.4717E+00	1.24552E-03	4.66860E-05	3.45865E-01
2.6000E+02	4.4027E+00	1.18362E-03	4.58552E-05	3.48232E-01
2.6200E+02	4.3353E+00	1.16298E-03	4.55700E-05	3.50558E-01
2.6400E+02	4.2694E+00	1.18710E-03	4.59048E-05	3.52933E-01
2.6600E+02	4.2050E+00	1.23555E-03	4.65496E-05	3.55404E-01
2.6800E+02	4.1421E+00	1.21293E-03	4.62520E-05	3.57830E-01
2.7000E+02	4.0805E+00	1.25334E-03	4.67852E-05	3.60336E-01
2.7200E+02	4.0204E+00	1.27291E-03	4.70456E-05	3.62882E-01
2.7400E+02	3.9615E+00	1.20106E-03	4.60908E-05	3.65284E-01
2.7600E+02	3.9040E+00	1.15386E-03	4.54460E-05	3.67592E-01
2.7800E+02	3.8476E+00	1.18095E-03	4.58180E-05	3.69954E-01
2.8000E+02	3.7925E+00	1.20870E-03	4.61900E-05	3.72371E-01
2.8200E+02	3.7386E+00	1.11791E-03	4.49624E-05	3.74607E-01
2.8400E+02	3.6858E+00	1.07992E-03	4.44292E-05	3.76767E-01
2.8600E+02	3.6342E+00	1.02369E-03	4.36356E-05	3.78814E-01
2.8800E+02	3.5836E+00	1.02283E-03	4.36232E-05	3.80860E-01
2.9000E+02	3.5340E+00	9.99130E-04	4.32884E-05	3.82858E-01
2.9200E+02	3.4855E+00	1.00787E-03	4.34124E-05	3.84874E-01
2.9400E+02	3.4380E+00	9.89706E-04	4.31520E-05	3.86853E-01
2.9600E+02	3.3915E+00	9.45054E-04	4.25072E-05	3.88743E-01
2.9800E+02	3.3458E+00	9.28016E-04	4.22592E-05	3.90599E-01
3.0000E+02	3.3011E+00	9.11102E-04	4.20112E-05	3.92422E-01
3.0200E+02	3.2573E+00	9.05237E-04	4.19244E-05	3.94232E-01
3.0400E+02	3.2144E+00	9.63604E-04	4.27800E-05	3.96159E-01
3.0600E+02	3.1723E+00	9.55246E-04	4.26560E-05	3.98070E-01
3.0800E+02	3.1310E+00	9.82750E-04	4.30528E-05	4.00035E-01
3.1000E+02	3.0906E+00	9.76636E-04	4.29660E-05	4.01989E-01
3.1200E+02	3.0509E+00	1.04583E-03	4.39456E-05	4.04080E-01
3.1400E+02	3.0119E+00	1.03813E-03	4.38464E-05	4.06156E-01
3.1600E+02	2.9738E+00	1.03298E-03	4.37720E-05	4.08222E-01
3.1800E+02	2.9363E+00	9.57168E-04	4.26808E-05	4.10137E-01

3.2000E+02	2.8995E+00	8.91287E-04	4.17136E-05	4.11919E-01
3.2200E+02	2.8635E+00	8.93122E-04	4.17384E-05	4.13706E-01
3.2400E+02	2.8281E+00	9.05237E-04	4.19244E-05	4.15516E-01
3.2600E+02	2.7933E+00	8.81727E-04	4.15772E-05	4.17280E-01
3.2800E+02	2.7592E+00	7.83754E-04	4.00892E-05	4.18847E-01
3.3000E+02	2.7257E+00	8.24203E-04	4.07092E-05	4.20495E-01
3.3200E+02	2.6928E+00	8.56766E-04	4.11928E-05	4.22209E-01
3.3400E+02	2.6605E+00	8.24526E-04	4.07092E-05	4.23858E-01
3.3600E+02	2.6288E+00	7.65911E-04	3.98040E-05	4.25390E-01
3.3800E+02	2.5977E+00	7.80295E-04	4.00272E-05	4.26950E-01
3.4000E+02	2.5671E+00	7.61571E-04	3.97420E-05	4.28474E-01
3.4200E+02	2.5370E+00	7.47075E-04	3.95188E-05	4.29968E-01
3.4400E+02	2.5075E+00	7.55594E-04	3.96428E-05	4.31479E-01
3.4600E+02	2.4785E+00	7.42326E-04	3.94444E-05	4.32964E-01
3.4800E+02	2.4500E+00	7.60306E-04	3.97172E-05	4.34484E-01
3.5000E+02	2.4219E+00	7.06676E-04	3.88740E-05	4.35898E-01
3.5200E+02	2.3944E+00	7.02472E-04	3.88120E-05	4.37302E-01
3.5400E+02	2.3673E+00	7.54887E-04	3.96304E-05	4.38812E-01
3.5600E+02	2.3407E+00	6.96446E-04	3.87128E-05	4.40205E-01
3.5800E+02	2.3145E+00	7.43702E-04	3.94568E-05	4.41693E-01
3.6000E+02	2.2888E+00	6.99298E-04	3.87624E-05	4.43091E-01
3.6200E+02	2.2635E+00	6.72030E-04	3.83160E-05	4.44435E-01
3.6400E+02	2.2386E+00	6.64008E-04	3.81920E-05	4.45763E-01
3.6600E+02	2.2141E+00	6.24526E-04	3.75472E-05	4.47012E-01
3.6800E+02	2.1900E+00	5.96043E-04	3.70636E-05	4.48204E-01
3.7000E+02	2.1663E+00	6.41576E-04	3.78200E-05	4.49488E-01
3.7200E+02	2.1430E+00	6.05132E-04	3.72248E-05	4.50698E-01
3.7400E+02	2.1201E+00	6.08381E-04	3.72744E-05	4.51915E-01
3.7600E+02	2.0975E+00	4.77127E-04	3.50176E-05	4.52869E-01
3.7800E+02	2.0753E+00	5.11810E-04	3.56252E-05	4.53892E-01
3.8000E+02	2.0534E+00	5.13075E-04	3.56500E-05	4.54919E-01
3.8200E+02	2.0319E+00	4.41787E-04	3.43852E-05	4.55802E-01
3.8400E+02	2.0107E+00	4.53952E-04	3.46084E-05	4.56710E-01
3.8600E+02	1.9899E+00	3.92448E-04	3.34924E-05	4.57495E-01
3.8800E+02	1.9693E+00	3.78894E-04	3.32320E-05	4.58253E-01
3.9000E+02	1.9491E+00	3.69049E-04	3.30584E-05	4.58991E-01
3.9200E+02	1.9292E+00	3.55223E-04	3.27980E-05	4.59701E-01
3.9400E+02	1.9096E+00	3.32494E-04	3.23640E-05	4.60366E-01
3.9600E+02	1.8903E+00	3.31762E-04	3.23516E-05	4.61030E-01
3.9800E+02	1.8713E+00	3.21160E-04	3.21408E-05	4.61672E-01
4.0000E+02	1.8526E+00	2.68014E-04	3.10992E-05	4.62208E-01
4.0200E+02	1.8342E+00	3.10136E-04	3.19300E-05	4.62828E-01
4.0400E+02	1.8160E+00	2.94054E-04	3.16200E-05	4.63417E-01
4.0600E+02	1.7981E+00	2.96769E-04	3.16696E-05	4.64010E-01
4.0800E+02	1.7805E+00	2.53692E-04	3.08140E-05	4.64517E-01
4.1000E+02	1.7631E+00	2.36294E-04	3.04668E-05	4.64990E-01
4.1200E+02	1.7460E+00	2.44168E-04	3.06156E-05	4.65478E-01
4.1400E+02	1.7291E+00	1.98970E-04	2.96980E-05	4.65876E-01

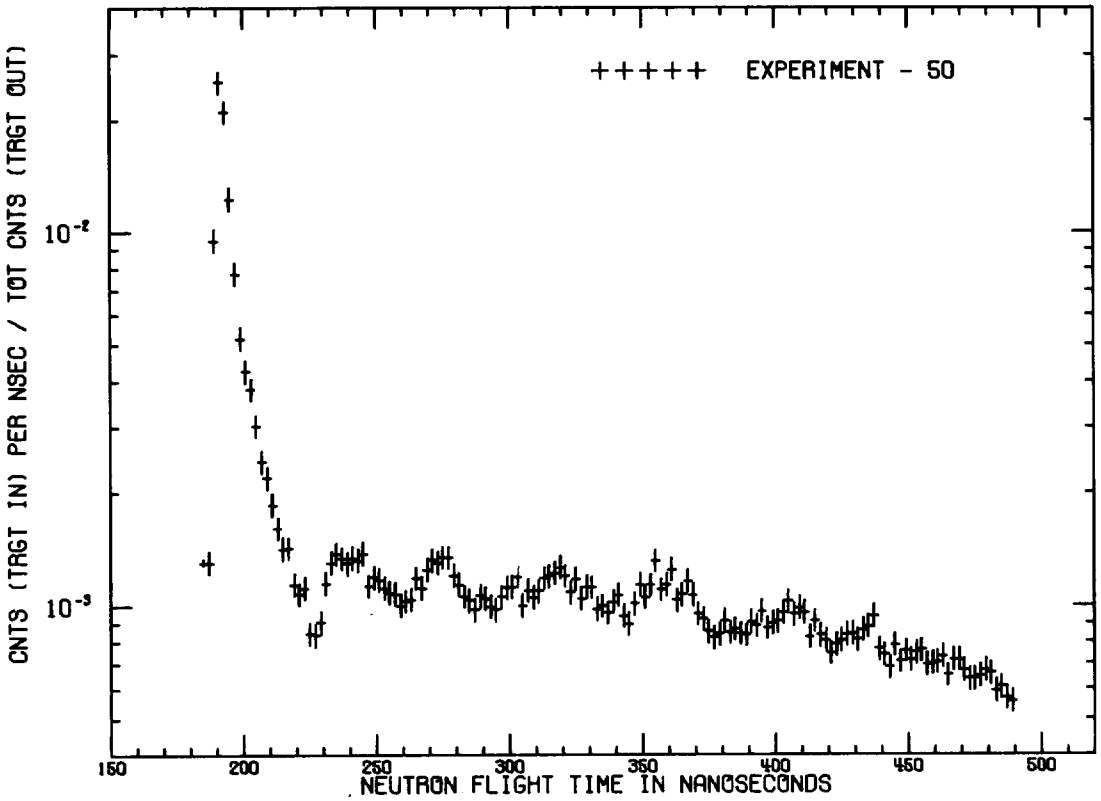

TEFLON - 2.9 M.F.P. - 120 DEG.

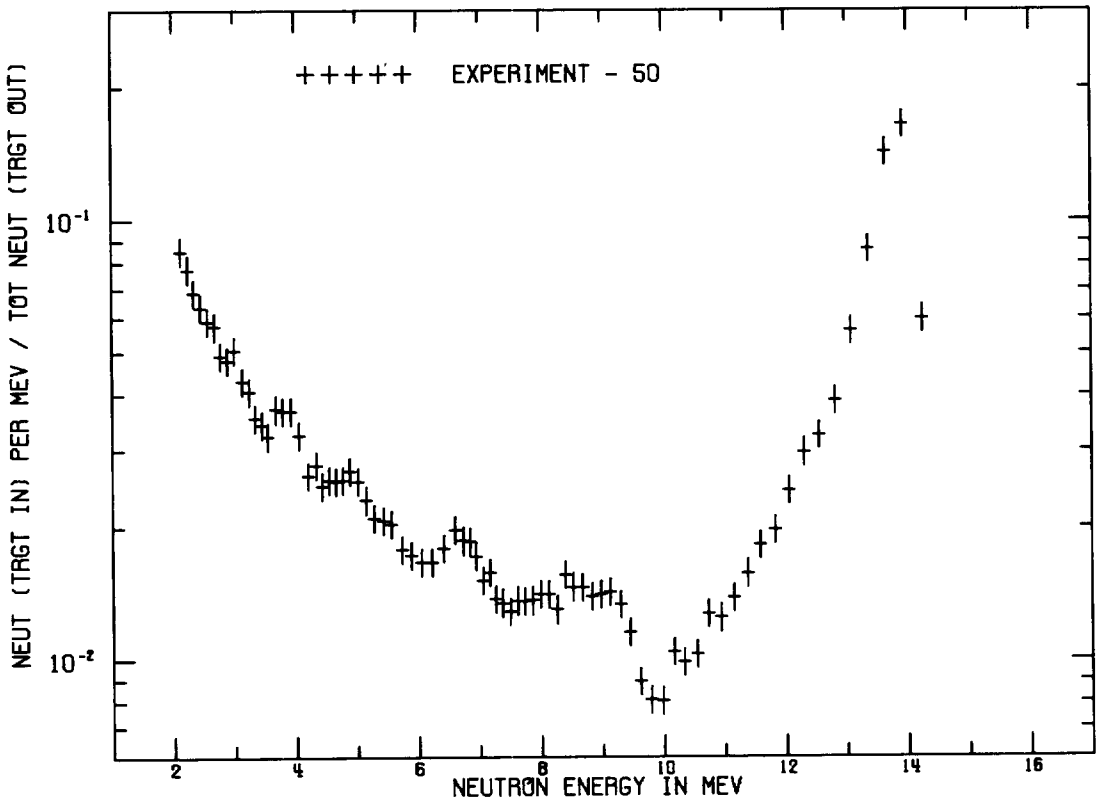

TEFLON - 2.9 M.F.P. - 120 DEG.

TEFLON - 2.9 M.F.P. - 120 DEG.
FLIGHTPATH = 975.40 CM DETECTOR = NE213 FWHM = 3 NS

TIME(NS)	CALCULATED ENERGY(MEV)	CNT/NS/SOURCE	ERROR	INTEGRAL
1.8500E+02	1.4874E+01	2.97250E-04	2.64750E-05	5.94500E-04
1.8700E+02	1.4550E+01	1.30350E-03	5.36500E-05	3.20150E-03
1.8900E+02	1.4237E+01	9.48000E-03	1.43400E-04	2.21615E-02
1.9100E+02	1.3934E+01	2.51800E-02	2.33500E-04	7.25215E-02
1.9300E+02	1.3640E+01	2.09600E-02	2.13050E-04	1.14442E-01
1.9500E+02	1.3356E+01	1.22450E-02	1.62900E-04	1.38932E-01
1.9700E+02	1.3080E+01	7.71500E-03	1.29400E-04	1.54361E-01
1.9900E+02	1.2813E+01	5.19500E-03	1.06300E-04	1.64751E-01
2.0100E+02	1.2554E+01	4.23900E-03	9.60500E-05	1.73229E-01
2.0300E+02	1.2303E+01	3.79100E-03	9.09000E-05	1.80811E-01
2.0500E+02	1.2060E+01	3.02150E-03	8.12000E-05	1.86854E-01
2.0700E+02	1.1824E+01	2.42100E-03	7.27500E-05	1.91696E-01
2.0900E+02	1.1594E+01	2.19100E-03	6.92500E-05	1.96078E-01
2.1100E+02	1.1371E+01	1.85700E-03	6.38500E-05	1.99792E-01
2.1300E+02	1.1155E+01	1.60450E-03	5.94000E-05	2.03001E-01
2.1500E+02	1.0945E+01	1.41950E-03	5.59500E-05	2.05840E-01
2.1700E+02	1.0741E+01	1.42400E-03	5.60000E-05	2.08688E-01
2.1900E+02	1.0542E+01	1.13650E-03	5.01500E-05	2.10961E-01
2.2100E+02	1.0349E+01	1.07150E-03	4.87450E-05	2.13104E-01
2.2300E+02	1.0161E+01	1.11150E-03	4.96150E-05	2.15327E-01
2.2500E+02	9.9785E+00	8.42500E-04	4.33600E-05	2.17012E-01
2.2700E+02	9.8007E+00	8.35000E-04	4.31800E-05	2.18682E-01
2.2900E+02	9.6276E+00	9.02000E-04	4.48150E-05	2.20486E-01
2.3100E+02	9.4591E+00	1.14700E-03	5.04000E-05	2.22780E-01
2.3300E+02	9.2950E+00	1.30100E-03	5.36000E-05	2.25382E-01
2.3500E+02	9.1351E+00	1.37250E-03	5.50000E-05	2.28127E-01
2.3700E+02	8.9794E+00	1.33500E-03	5.42500E-05	2.30797E-01
2.3900E+02	8.8276E+00	1.29550E-03	5.35000E-05	2.33388E-01
2.4100E+02	8.6797E+00	1.33650E-03	5.43000E-05	2.36061E-01
2.4300E+02	8.5355E+00	1.32000E-03	5.39500E-05	2.38701E-01
2.4500E+02	8.3948E+00	1.37900E-03	5.51500E-05	2.41459E-01
2.4700E+02	8.2576E+00	1.12700E-03	4.99600E-05	2.43713E-01
2.4900E+02	8.1238E+00	1.19050E-03	5.13000E-05	2.46094E-01
2.5100E+02	7.9932E+00	1.17200E-03	5.09000E-05	2.48438E-01
2.5300E+02	7.8657E+00	1.11150E-03	4.96250E-05	2.50661E-01
2.5500E+02	7.7413E+00	1.08350E-03	4.90050E-05	2.52828E-01
2.5700E+02	7.6198E+00	1.07550E-03	4.88300E-05	2.54979E-01
2.5900E+02	7.5012E+00	9.99500E-04	4.71200E-05	2.56978E-01
2.6100E+02	7.3853E+00	1.02700E-03	4.77400E-05	2.59032E-01
2.6300E+02	7.2721E+00	1.03600E-03	4.79450E-05	2.61104E-01
2.6500E+02	7.1615E+00	1.18350E-03	5.11500E-05	2.63471E-01
2.6700E+02	7.0534E+00	1.11450E-03	4.96850E-05	2.65700E-01
2.6900E+02	6.9478E+00	1.24750E-03	5.25000E-05	2.68195E-01
2.7100E+02	6.8445E+00	1.32300E-03	5.40500E-05	2.70841E-01
2.7300E+02	6.7435E+00	1.30300E-03	5.36500E-05	2.73447E-01

2.7500E+02	6.6447E+00	1.34400E-03	5.44500E-05	2.76135E-01
2.7700E+02	6.5481E+00	1.34550E-03	5.45000E-05	2.78826E-01
2.7900E+02	6.4536E+00	1.20550E-03	5.16500E-05	2.81237E-01
2.8100E+02	6.3611E+00	1.13850E-03	5.02000E-05	2.83514E-01
2.8300E+02	6.2706E+00	1.05600E-03	4.83950E-05	2.85626E-01
2.8500E+02	6.1821E+00	1.03300E-03	4.78850E-05	2.87692E-01
2.8700E+02	6.0954E+00	9.76000E-04	4.65800E-05	2.89644E-01
2.8900E+02	6.0105E+00	1.06200E-03	4.85300E-05	2.91768E-01
2.9100E+02	5.9274E+00	1.04450E-03	4.81450E-05	2.93857E-01
2.9300E+02	5.8460E+00	9.94000E-04	4.69850E-05	2.95845E-01
2.9500E+02	5.7662E+00	9.75000E-04	4.65450E-05	2.97795E-01
2.9700E+02	5.6881E+00	1.05500E-03	4.83800E-05	2.99905E-01
2.9900E+02	5.6116E+00	1.11700E-03	4.97400E-05	3.02139E-01
3.0100E+02	5.5366E+00	1.12000E-03	4.98100E-05	3.04379E-01
3.0300E+02	5.4631E+00	1.19250E-03	5.13500E-05	3.06764E-01
3.0500E+02	5.3911E+00	1.00000E-03	4.71300E-05	3.08764E-01
3.0700E+02	5.3205E+00	1.09650E-03	4.92950E-05	3.10957E-01
3.0900E+02	5.2513E+00	1.05150E-03	4.83000E-05	3.13060E-01
3.1100E+02	5.1834E+00	1.09350E-03	4.92250E-05	3.15247E-01
3.1300E+02	5.1168E+00	1.18250E-03	5.11500E-05	3.17612E-01
3.1500E+02	5.0515E+00	1.19900E-03	5.15000E-05	3.20010E-01
3.1700E+02	4.9875E+00	1.22100E-03	5.19500E-05	3.22452E-01
3.1900E+02	4.9246E+00	1.26700E-03	5.29000E-05	3.24986E-01
3.2100E+02	4.8630E+00	1.19950E-03	5.15000E-05	3.27385E-01
3.2300E+02	4.8025E+00	1.08450E-03	4.90350E-05	3.29554E-01
3.2500E+02	4.7431E+00	1.17900E-03	5.10500E-05	3.31912E-01
3.2700E+02	4.6848E+00	1.04350E-03	4.81200E-05	3.33999E-01
3.2900E+02	4.6276E+00	1.12200E-03	4.98500E-05	3.36243E-01
3.3100E+02	4.5715E+00	1.11800E-03	4.97600E-05	3.38479E-01
3.3300E+02	4.5163E+00	9.79000E-04	4.66400E-05	3.40437E-01
3.3500E+02	4.4622E+00	9.97500E-04	4.70700E-05	3.42432E-01
3.3700E+02	4.4090E+00	9.56500E-04	4.61200E-05	3.44345E-01
3.3900E+02	4.3568E+00	1.02400E-03	4.76750E-05	3.46393E-01
3.4100E+02	4.3055E+00	1.06700E-03	4.86450E-05	3.48527E-01
3.4300E+02	4.2551E+00	9.40500E-04	4.57350E-05	3.50408E-01
3.4500E+02	4.2055E+00	8.93500E-04	4.46150E-05	3.52195E-01
3.4700E+02	4.1569E+00	1.01050E-03	4.73650E-05	3.54216E-01
3.4900E+02	4.1091E+00	1.13600E-03	5.01500E-05	3.56488E-01
3.5100E+02	4.0621E+00	1.04950E-03	4.82450E-05	3.58587E-01
3.5300E+02	4.0159E+00	1.13400E-03	5.01000E-05	3.60855E-01
3.5500E+02	3.9705E+00	1.31600E-03	5.39000E-05	3.63487E-01
3.5700E+02	3.9258E+00	1.10300E-03	4.94400E-05	3.65693E-01
3.5900E+02	3.8819E+00	1.13750E-03	5.02000E-05	3.67968E-01
3.6100E+02	3.8388E+00	1.24500E-03	5.24500E-05	3.70458E-01
3.6300E+02	3.7963E+00	1.03200E-03	4.78600E-05	3.72522E-01
3.6500E+02	3.7546E+00	1.07050E-03	4.87250E-05	3.74663E-01
3.6700E+02	3.7135E+00	1.16100E-03	5.07000E-05	3.76985E-01
3.6900E+02	3.6732E+00	1.06550E-03	4.86150E-05	3.79116E-01

3.7100E+02	3.6334E+00	9.49000E-04	4.59450E-05	3.81014E-01
3.7300E+02	3.5944E+00	9.21500E-04	4.52950E-05	3.82857E-01
3.7500E+02	3.5559E+00	8.53000E-04	4.36250E-05	3.84563E-01
3.7700E+02	3.5181E+00	8.22500E-04	4.28650E-05	3.86208E-01
3.7900E+02	3.4808E+00	8.41000E-04	4.33300E-05	3.87890E-01
3.8100E+02	3.4442E+00	9.12500E-04	4.50700E-05	3.89715E-01
3.8300E+02	3.4081E+00	8.47500E-04	4.34900E-05	3.91410E-01
3.8500E+02	3.3726E+00	8.66000E-04	4.39450E-05	3.93142E-01
3.8700E+02	3.3376E+00	8.42500E-04	4.33650E-05	3.94827E-01
3.8900E+02	3.3032E+00	8.36000E-04	4.31950E-05	3.96499E-01
3.9100E+02	3.2693E+00	9.06500E-04	4.49250E-05	3.98312E-01
3.9300E+02	3.2360E+00	8.85000E-04	4.44150E-05	4.00082E-01
3.9500E+02	3.2031E+00	9.67500E-04	4.63800E-05	4.02017E-01
3.9700E+02	3.1708E+00	8.72500E-04	4.41000E-05	4.03762E-01
3.9900E+02	3.1389E+00	8.99000E-04	4.47550E-05	4.05560E-01
4.0100E+02	3.1075E+00	9.08500E-04	4.49800E-05	4.07377E-01
4.0300E+02	3.0766E+00	9.60500E-04	4.62150E-05	4.09298E-01
4.0500E+02	3.0461E+00	1.02450E-03	4.76900E-05	4.11347E-01
4.0700E+02	3.0161E+00	9.48000E-04	4.59200E-05	4.13243E-01
4.0900E+02	2.9866E+00	9.87500E-04	4.68350E-05	4.15218E-01
4.1100E+02	2.9574E+00	9.57500E-04	4.61400E-05	4.17133E-01
4.1300E+02	2.9287E+00	8.26000E-04	4.29450E-05	4.18785E-01
4.1500E+02	2.9004E+00	9.10500E-04	4.50250E-05	4.20606E-01
4.1700E+02	2.8726E+00	8.35000E-04	4.31750E-05	4.22276E-01
4.1900E+02	2.8451E+00	8.10000E-04	4.25450E-05	4.23896E-01
4.2100E+02	2.8180E+00	7.46000E-04	4.08900E-05	4.25388E-01
4.2300E+02	2.7913E+00	7.88500E-04	4.19900E-05	4.26965E-01
4.2500E+02	2.7650E+00	8.08000E-04	4.24900E-05	4.28581E-01
4.2700E+02	2.7390E+00	8.39000E-04	4.32750E-05	4.30259E-01
4.2900E+02	2.7134E+00	8.44000E-04	4.33950E-05	4.31947E-01
4.3100E+02	2.6882E+00	8.10500E-04	4.25550E-05	4.33568E-01
4.3300E+02	2.6633E+00	8.61000E-04	4.38200E-05	4.35290E-01
4.3500E+02	2.6388E+00	8.79500E-04	4.42750E-05	4.37049E-01
4.3700E+02	2.6146E+00	9.40000E-04	4.57300E-05	4.38929E-01
4.3900E+02	2.5907E+00	7.66500E-04	4.14250E-05	4.40462E-01
4.4100E+02	2.5672E+00	7.40500E-04	4.07450E-05	4.41943E-01
4.4300E+02	2.5439E+00	6.84000E-04	3.92100E-05	4.43311E-01
4.4500E+02	2.5210E+00	7.87500E-04	4.19700E-05	4.44886E-01
4.4700E+02	2.4984E+00	7.10000E-04	3.99250E-05	4.46306E-01
4.4900E+02	2.4761E+00	7.56500E-04	4.11650E-05	4.47819E-01
4.5100E+02	2.4541E+00	7.16500E-04	4.00900E-05	4.49252E-01
4.5300E+02	2.4324E+00	7.50500E-04	4.10050E-05	4.50753E-01
4.5500E+02	2.4110E+00	7.61500E-04	4.12950E-05	4.52276E-01
4.5700E+02	2.3899E+00	6.98000E-04	3.96000E-05	4.53672E-01
4.5900E+02	2.3690E+00	7.01000E-04	3.96750E-05	4.55074E-01
4.6100E+02	2.3484E+00	7.06000E-04	3.98050E-05	4.56486E-01
4.6300E+02	2.3281E+00	7.31500E-04	4.04950E-05	4.57949E-01
4.6500E+02	2.3080E+00	6.51500E-04	3.83000E-05	4.59252E-01

4.6700E+02	2.2882E+00	7.17500E-04	4.01200E-05	4.60687E-01
4.6900E+02	2.2687E+00	7.16500E-04	4.00900E-05	4.62120E-01
4.7100E+02	2.2494E+00	6.73500E-04	3.89200E-05	4.63467E-01
4.7300E+02	2.2304E+00	6.37000E-04	3.78950E-05	4.64741E-01
4.7500E+02	2.2115E+00	6.37500E-04	3.79100E-05	4.66016E-01
4.7700E+02	2.1930E+00	6.48500E-04	3.82250E-05	4.67313E-01
4.7900E+02	2.1746E+00	6.72500E-04	3.88950E-05	4.68658E-01
4.8100E+02	2.1565E+00	6.60500E-04	3.85500E-05	4.69979E-01
4.8300E+02	2.1386E+00	5.93000E-04	3.66200E-05	4.71165E-01
4.8500E+02	2.1210E+00	6.06000E-04	3.69900E-05	4.72377E-01
4.8700E+02	2.1035E+00	5.66500E-04	3.58250E-05	4.73510E-01
4.8900E+02	2.0863E+00	5.55000E-04	3.54750E-05	4.74620E-01

Concrete 2.0 m. f. p.

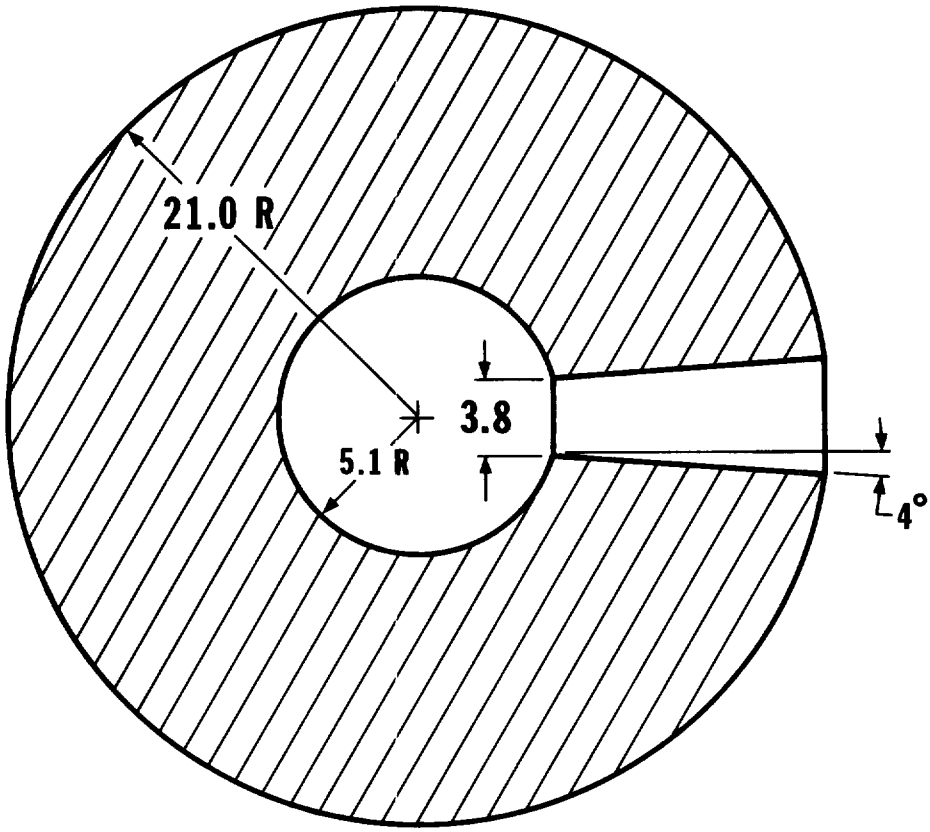

All Dimensions in Centimeters

$\rho = 2.35\ g/cm^3$

Material	Atomic %
O	55.7
H	15.1
Si	14.9
Ca	3.6
Al	3.2
C	3.1
Mg	1.8
Na	1.3
Fe, K, Ti, Mn	< 1.0 each

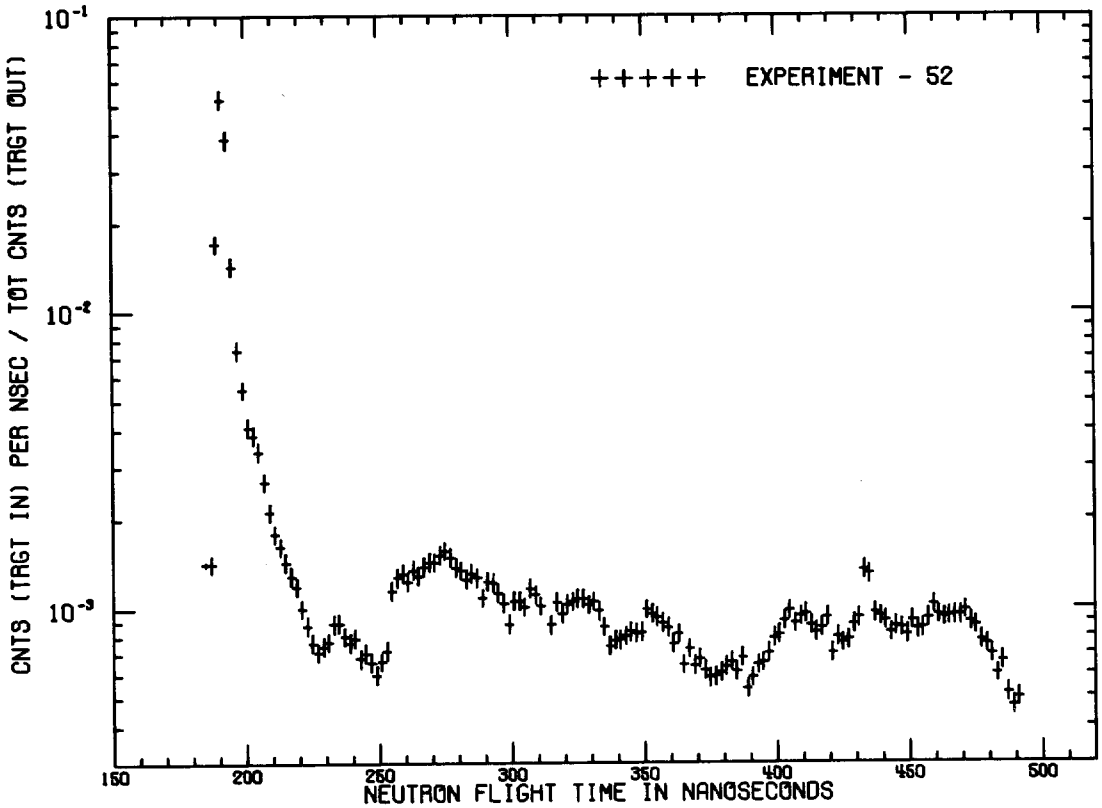

CONCRETE - 2.0 M.F.P. - 120 DEG.

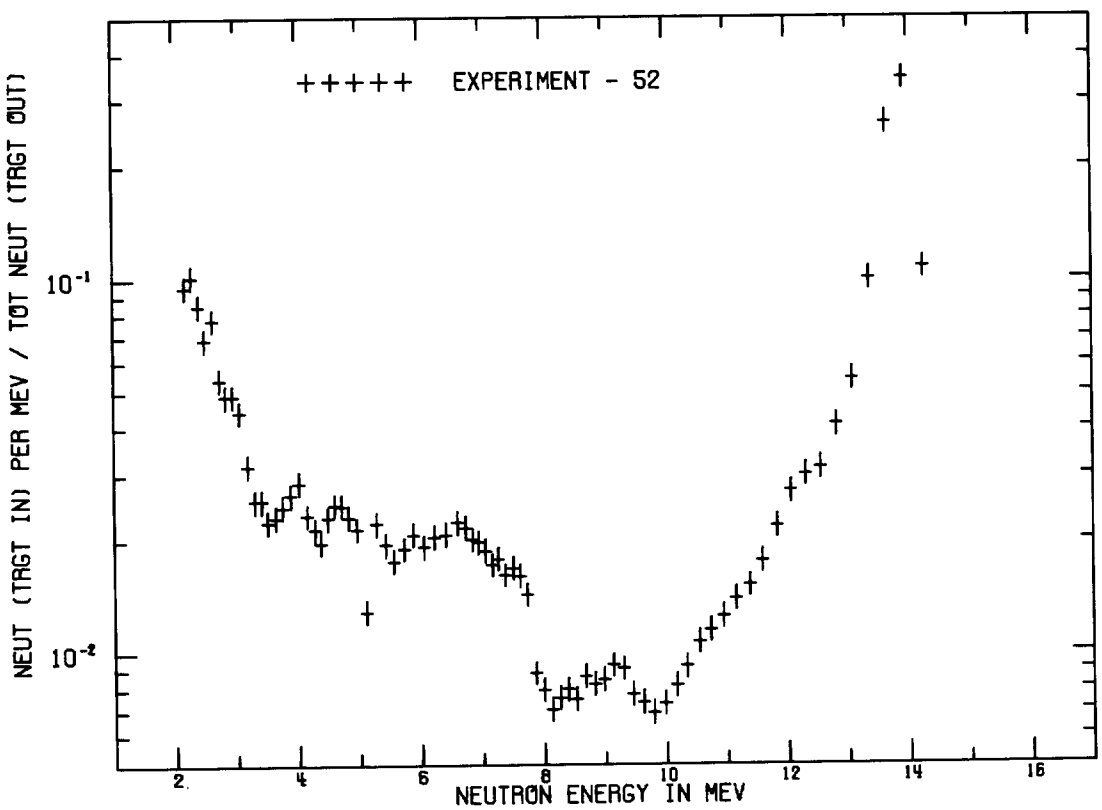

CONCRETE - 2.0 M.F.P. - 120 DEG.

CONCRETE - 2.0 M.F.P. - 120 DEG.
FLIGHTPATH = 975.40 CM DETECTOR = NE213 FWHM = 3 NS

TIME(NS)	CALCULATED ENERGY(MEV)	CNT/NS/SOURCE	ERROR	INTEGRAL
1.8500E+02	1.4874E+01	1.30050E-04	1.94950E-05	2.60100E-04
1.8700E+02	1.4550E+01	1.41050E-03	5.73000E-05	3.08110E-03
1.8900E+02	1.4237E+01	1.69650E-02	1.96250E-04	3.70111E-02
1.9100E+02	1.3934E+01	5.23000E-02	3.44350E-04	1.41611E-01
1.9300E+02	1.3640E+01	3.82550E-02	2.94550E-04	2.18121E-01
1.9500E+02	1.3356E+01	1.42150E-02	1.79700E-04	2.46551E-01
1.9700E+02	1.3080E+01	7.42500E-03	1.30050E-04	2.61401E-01
1.9900E+02	1.2813E+01	5.45000E-03	1.11500E-04	2.72301E-01
2.0100E+02	1.2554E+01	4.07150E-03	9.65000E-05	2.80444E-01
2.0300E+02	1.2303E+01	3.81550E-03	9.34500E-05	2.88075E-01
2.0500E+02	1.2060E+01	3.36650E-03	8.78000E-05	2.94808E-01
2.0700E+02	1.1824E+01	2.66250E-03	7.82000E-05	3.00133E-01
2.0900E+02	1.1594E+01	2.10600E-03	6.97000E-05	3.04345E-01
2.1100E+02	1.1371E+01	1.77750E-03	6.41500E-05	3.07900E-01
2.1300E+02	1.1155E+01	1.60950E-03	6.11000E-05	3.11119E-01
2.1500E+02	1.0945E+01	1.42450E-03	5.75500E-05	3.13968E-01
2.1700E+02	1.0741E+01	1.28400E-03	5.47000E-05	3.16536E-01
2.1900E+02	1.0542E+01	1.17850E-03	5.25000E-05	3.18893E-01
2.2100E+02	1.0349E+01	9.92500E-04	4.83150E-05	3.20878E-01
2.2300E+02	1.0161E+01	8.70500E-04	4.53550E-05	3.22619E-01
2.2500E+02	9.9785E+00	7.62000E-04	4.25650E-05	3.24143E-01
2.2700E+02	9.8007E+00	7.07500E-04	4.10900E-05	3.25558E-01
2.2900E+02	9.6276E+00	7.43000E-04	4.20550E-05	3.27044E-01
2.3100E+02	9.4591E+00	7.65500E-04	4.26550E-05	3.28575E-01
2.3300E+02	9.2950E+00	8.82500E-04	4.56600E-05	3.30340E-01
2.3500E+02	9.1351E+00	8.87500E-04	4.57850E-05	3.32115E-01
2.3700E+02	8.9794E+00	8.00500E-04	4.35700E-05	3.33716E-01
2.3900E+02	8.8276E+00	7.64000E-04	4.26200E-05	3.35244E-01
2.4100E+02	8.6797E+00	7.90500E-04	4.33250E-05	3.36825E-01
2.4300E+02	8.5355E+00	6.75000E-04	4.01800E-05	3.38175E-01
2.4500E+02	8.3948E+00	7.03000E-04	4.09650E-05	3.39581E-01
2.4700E+02	8.2576E+00	6.53500E-04	3.95750E-05	3.40888E-01
2.4900E+02	8.1238E+00	5.94500E-04	3.78400E-05	3.42077E-01
2.5100E+02	7.9932E+00	6.57500E-04	3.96800E-05	3.43392E-01
2.5300E+02	7.8657E+00	7.16500E-04	4.13400E-05	3.44825E-01
2.5500E+02	7.7413E+00	1.13900E-03	5.16500E-05	3.47103E-01
2.5700E+02	7.6198E+00	1.26250E-03	5.43000E-05	3.49628E-01
2.5900E+02	7.5012E+00	1.30800E-03	5.52000E-05	3.52244E-01
2.6100E+02	7.3853E+00	1.22700E-03	5.35500E-05	3.54698E-01
2.6300E+02	7.2721E+00	1.34200E-03	5.59000E-05	3.57382E-01
2.6500E+02	7.1615E+00	1.28350E-03	5.47000E-05	3.59949E-01
2.6700E+02	7.0534E+00	1.37700E-03	5.66000E-05	3.62703E-01
2.6900E+02	6.9478E+00	1.42750E-03	5.76000E-05	3.65558E-01
2.7100E+02	6.8445E+00	1.42350E-03	5.75500E-05	3.68405E-01
2.7300E+02	6.7435E+00	1.50300E-03	5.91000E-05	3.71411E-01

2.7500E+02	6.6447E+00	1.55400E-03	6.00500E-05	3.74519E-01
2.7700E+02	6.5481E+00	1.47750E-03	5.86000E-05	3.77474E-01
2.7900E+02	6.4536E+00	1.36400E-03	5.63500E-05	3.80202E-01
2.8100E+02	6.3611E+00	1.33600E-03	5.58000E-05	3.82874E-01
2.8300E+02	6.2706E+00	1.24950E-03	5.40000E-05	3.85373E-01
2.8500E+02	6.1821E+00	1.30700E-03	5.52000E-05	3.87987E-01
2.8700E+02	6.0954E+00	1.26300E-03	5.43000E-05	3.90513E-01
2.8900E+02	6.0105E+00	1.07550E-03	5.02500E-05	3.92664E-01
2.9100E+02	5.9274E+00	1.22300E-03	5.34500E-05	3.95110E-01
2.9300E+02	5.8460E+00	1.21450E-03	5.32500E-05	3.97539E-01
2.9500E+02	5.7662E+00	1.12000E-03	5.12000E-05	3.99779E-01
2.9700E+02	5.6881E+00	1.03550E-03	4.93050E-05	4.01850E-01
2.9900E+02	5.6116E+00	8.78000E-04	4.55500E-05	4.03606E-01
3.0100E+02	5.5366E+00	1.05150E-03	4.96750E-05	4.05709E-01
3.0300E+02	5.4631E+00	1.05300E-03	4.97150E-05	4.07815E-01
3.0500E+02	5.3911E+00	1.00300E-03	4.85600E-05	4.09821E-01
3.0700E+02	5.3205E+00	1.15900E-03	5.20500E-05	4.12139E-01
3.0900E+02	5.2513E+00	1.10400E-03	5.08500E-05	4.14347E-01
3.1100E+02	5.1834E+00	1.01100E-03	4.87400E-05	4.16369E-01
3.1500E+02	5.0515E+00	8.75000E-04	4.54750E-05	4.18119E-01
3.1700E+02	4.9875E+00	1.04150E-03	4.94450E-05	4.20202E-01
3.1900E+02	4.9246E+00	9.55000E-04	4.74250E-05	4.22112E-01
3.2100E+02	4.8630E+00	1.02250E-03	4.90050E-05	4.24157E-01
3.2300E+02	4.8025E+00	1.05000E-03	4.96400E-05	4.26257E-01
3.2500E+02	4.7431E+00	1.07100E-03	5.01000E-05	4.28399E-01
3.2700E+02	4.6848E+00	1.07050E-03	5.01000E-05	4.30540E-01
3.2900E+02	4.6276E+00	1.02100E-03	4.89800E-05	4.32582E-01
3.3100E+02	4.5715E+00	1.04800E-03	4.95950E-05	4.34678E-01
3.3300E+02	4.5163E+00	9.74500E-04	4.78850E-05	4.36627E-01
3.3500E+02	4.4622E+00	8.62000E-04	4.51550E-05	4.38351E-01
3.3700E+02	4.4090E+00	7.41000E-04	4.20050E-05	4.39833E-01
3.3900E+02	4.3568E+00	7.75000E-04	4.29100E-05	4.41383E-01
3.4100E+02	4.3055E+00	7.78500E-04	4.29950E-05	4.42940E-01
3.4300E+02	4.2551E+00	8.00500E-04	4.35800E-05	4.44541E-01
3.4500E+02	4.2055E+00	8.29000E-04	4.43100E-05	4.46199E-01
3.4700E+02	4.1569E+00	8.19000E-04	4.40600E-05	4.47837E-01
3.4900E+02	4.1091E+00	8.26500E-04	4.42500E-05	4.49490E-01
3.5100E+02	4.0621E+00	9.85000E-04	4.81350E-05	4.51460E-01
3.5300E+02	4.0159E+00	9.53500E-04	4.73850E-05	4.53367E-01
3.5500E+02	3.9705E+00	9.27000E-04	4.67500E-05	4.55221E-01
3.5700E+02	3.9258E+00	8.87500E-04	4.57800E-05	4.56996E-01
3.5900E+02	3.8819E+00	8.57000E-04	4.50200E-05	4.58710E-01
3.6100E+02	3.8388E+00	7.57000E-04	4.24400E-05	4.60224E-01
3.6300E+02	3.7963E+00	8.16500E-04	4.39900E-05	4.61857E-01
3.6500E+02	3.7546E+00	6.40500E-04	3.92050E-05	4.63138E-01
3.6700E+02	3.7135E+00	7.25500E-04	4.15800E-05	4.64589E-01
3.6900E+02	3.6732E+00	6.37000E-04	3.90950E-05	4.65863E-01
3.7100E+02	3.6334E+00	6.73000E-04	4.01350E-05	4.67209E-01

3.7300E+02	3.5944E+00	6.15500E-04	3.84650E-05	4.68440E-01
3.7500E+02	3.5559E+00	5.79500E-04	3.73950E-05	4.69599E-01
3.7700E+02	3.5181E+00	5.85000E-04	3.75550E-05	4.70769E-01
3.7900E+02	3.4808E+00	6.03000E-04	3.80950E-05	4.71975E-01
3.8100E+02	3.4442E+00	6.32000E-04	3.89500E-05	4.73239E-01
3.8300E+02	3.4081E+00	6.56500E-04	3.96600E-05	4.74552E-01
3.8500E+02	3.3726E+00	6.10500E-04	3.83250E-05	4.75773E-01
3.8700E+02	3.3376E+00	6.79000E-04	4.02900E-05	4.77131E-01
3.8900E+02	3.3032E+00	5.33000E-04	3.59650E-05	4.78197E-01
3.9100E+02	3.2693E+00	5.81500E-04	3.74550E-05	4.79360E-01
3.9300E+02	3.2360E+00	6.40500E-04	3.91950E-05	4.80641E-01
3.9500E+02	3.2031E+00	6.52500E-04	3.95400E-05	4.81946E-01
3.9700E+02	3.1708E+00	7.04500E-04	4.10050E-05	4.83355E-01
3.9900E+02	3.1389E+00	7.90500E-04	4.33250E-05	4.84936E-01
4.0100E+02	3.1075E+00	8.13500E-04	4.39150E-05	4.86563E-01
4.0300E+02	3.0766E+00	9.05500E-04	4.62250E-05	4.88374E-01
4.0500E+02	3.0461E+00	9.76500E-04	4.79350E-05	4.90327E-01
4.0700E+02	3.0161E+00	8.85000E-04	4.57250E-05	4.92097E-01
4.0900E+02	2.9866E+00	9.33500E-04	4.69050E-05	4.93964E-01
4.1100E+02	2.9574E+00	9.55500E-04	4.74350E-05	4.95875E-01
4.1300E+02	2.9287E+00	8.73000E-04	4.54200E-05	4.97621E-01
4.1500E+02	2.9004E+00	8.28500E-04	4.42950E-05	4.99278E-01
4.1700E+02	2.8726E+00	8.55000E-04	4.49700E-05	5.00988E-01
4.1900E+02	2.8451E+00	9.30500E-04	4.68350E-05	5.02849E-01
4.2100E+02	2.8180E+00	7.03500E-04	4.09850E-05	5.04256E-01
4.2300E+02	2.7913E+00	7.97500E-04	4.34950E-05	5.05851E-01
4.2500E+02	2.7650E+00	7.59000E-04	4.24850E-05	5.07369E-01
4.2700E+02	2.7390E+00	7.78500E-04	4.30100E-05	5.08926E-01
4.2900E+02	2.7134E+00	8.78500E-04	4.55600E-05	5.10683E-01
4.3100E+02	2.6882E+00	9.23000E-04	4.66500E-05	5.12529E-01
4.3300E+02	2.6633E+00	1.33950E-03	5.58500E-05	5.15208E-01
4.3500E+02	2.6388E+00	1.29750E-03	5.50000E-05	5.17803E-01
4.3700E+02	2.6146E+00	9.56500E-04	4.74650E-05	5.19716E-01
4.3900E+02	2.5907E+00	9.32000E-04	4.68700E-05	5.21580E-01
4.4100E+02	2.5672E+00	9.06000E-04	4.62350E-05	5.23392E-01
4.4300E+02	2.5439E+00	8.22500E-04	4.41400E-05	5.25037E-01
4.4500E+02	2.5210E+00	8.63000E-04	4.51700E-05	5.26763E-01
4.4700E+02	2.4984E+00	8.53000E-04	4.49150E-05	5.28469E-01
4.4900E+02	2.4761E+00	8.11000E-04	4.38500E-05	5.30091E-01
4.5100E+02	2.4541E+00	9.04000E-04	4.61850E-05	5.31899E-01
4.5300E+02	2.4324E+00	8.44500E-04	4.47050E-05	5.33588E-01
4.5500E+02	2.4110E+00	8.51500E-04	4.48850E-05	5.35291E-01
4.5700E+02	2.3899E+00	9.19500E-04	4.65650E-05	5.37130E-01
4.5900E+02	2.3690E+00	1.02000E-03	4.89500E-05	5.39170E-01
4.6100E+02	2.3484E+00	9.42000E-04	4.71150E-05	5.41054E-01
4.6300E+02	2.3281E+00	9.26000E-04	4.67250E-05	5.42906E-01
4.6500E+02	2.3080E+00	9.33500E-04	4.69050E-05	5.44773E-01
4.6700E+02	2.2882E+00	9.40000E-04	4.70700E-05	5.46653E-01

4.6900E+02	2.2687E+00	9.39500E-04	4.70500E-05	5.48532E-01
4.7100E+02	2.2494E+00	9.77500E-04	4.79600E-05	5.50487E-01
4.7300E+02	2.2304E+00	8.96500E-04	4.60100E-05	5.52280E-01
4.7500E+02	2.2115E+00	8.68000E-04	4.53000E-05	5.54016E-01
4.7700E+02	2.1930E+00	7.78000E-04	4.29900E-05	5.55572E-01
4.7900E+02	2.1746E+00	7.52000E-04	4.22950E-05	5.57076E-01
4.8100E+02	2.1565E+00	6.97000E-04	4.08050E-05	5.58470E-01
4.8300E+02	2.1386E+00	5.96000E-04	3.78850E-05	5.59662E-01
4.8500E+02	2.1210E+00	6.61500E-04	3.98000E-05	5.60985E-01
4.8700E+02	2.1035E+00	5.15500E-04	3.54000E-05	5.62016E-01
4.8900E+02	2.0863E+00	4.66800E-04	3.38100E-05	5.62950E-01
4.9100E+02	2.0693E+00	4.97200E-04	3.48100E-05	5.63944E-01

Concrete 3.8 m. f. p.

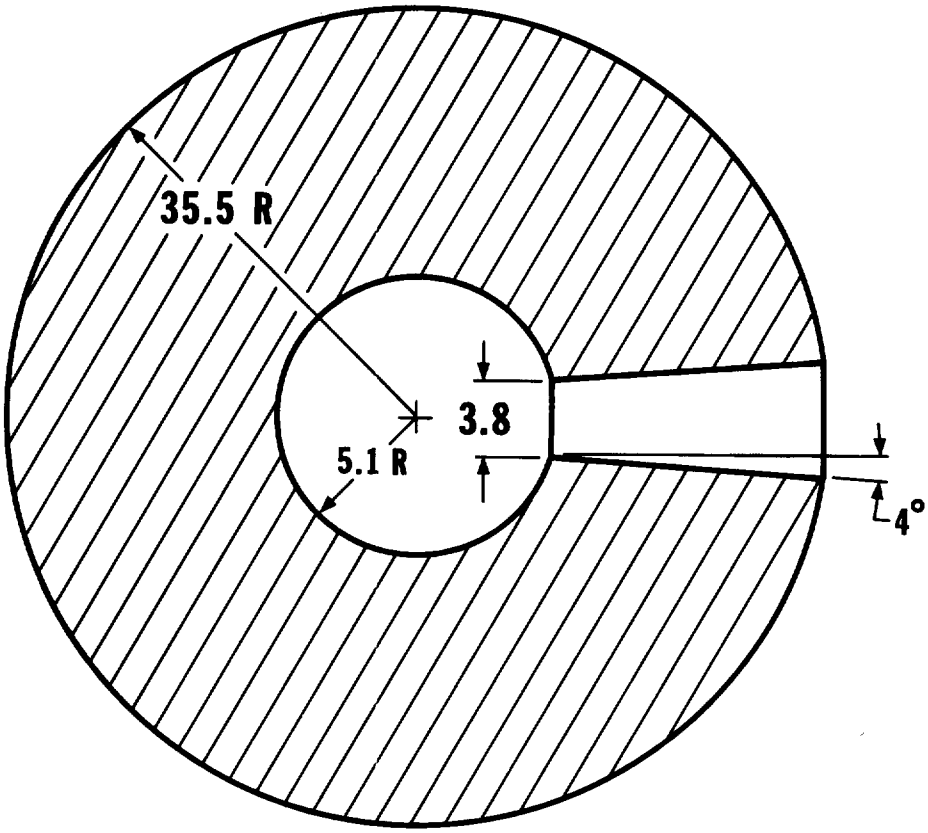

All Dimensions in Centimeters

$\rho = 2.35\ g/cm^3$

Material	Atomic %
O	55.7
H	15.1
Si	14.9
Ca	3.6
Al	3.2
C	3.1
Mg	1.8
Na	1.3
Fe, K, Ti, Mn	< 1.0 each

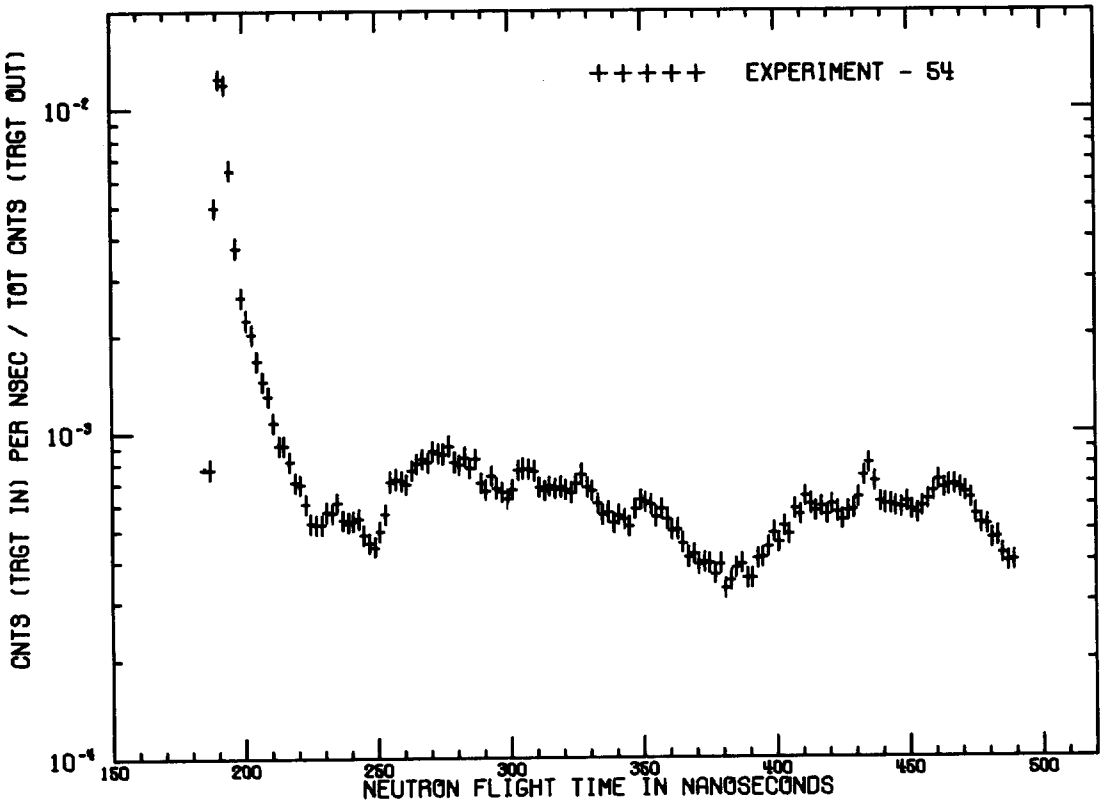

CONCRETE - 3.8 M.F.P. - 120 DEG.

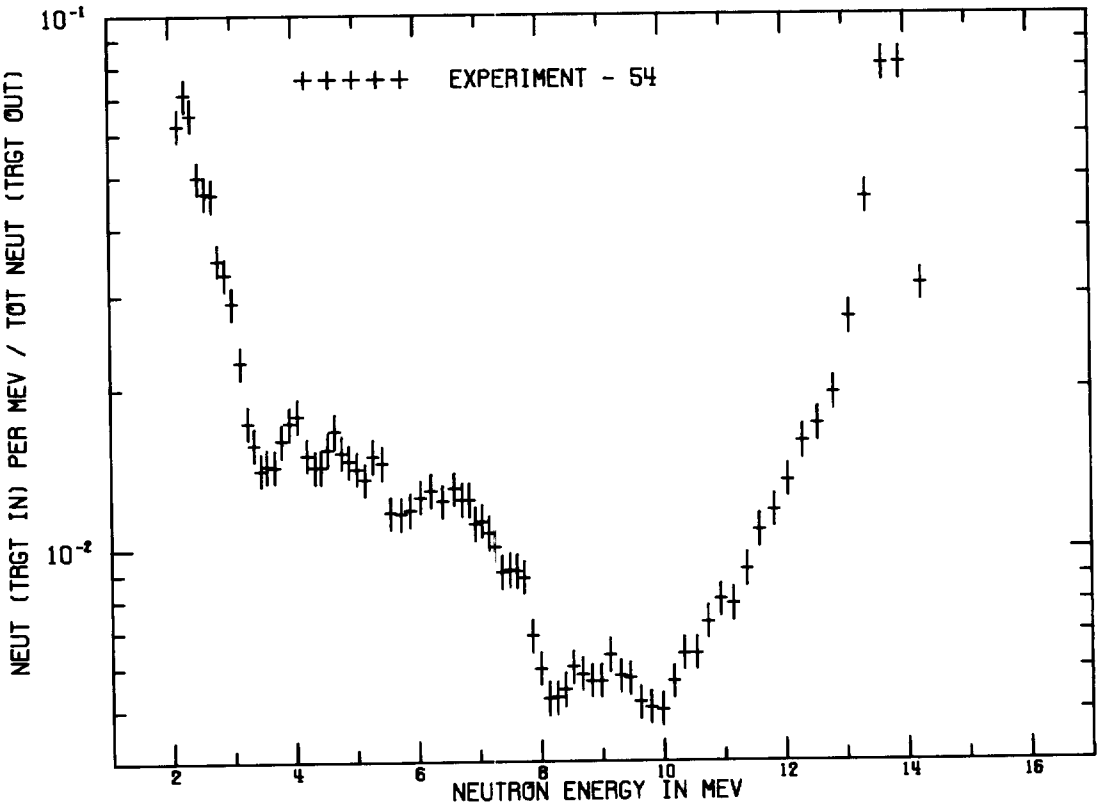

CONCRETE - 3.8 M.F.P. - 120 DEG.

CONCRETE - 3.8 M.F.P. - 120 DEG.
FLIGHTPATH = 975.40 CM DETECTOR = NE213 FWHM = 3 NS

TIME(NS)	CALCULATED ENERGY(MEV)	CNT/NS/SOURCE	ERROR	INTEGRAL
1.8500E+02	1.4874E+01	9.57500E-05	1.00250E-05	1.91500E-04
1.8700E+02	1.4550E+01	7.72000E-04	2.69000E-05	1.73550E-03
1.8900E+02	1.4237E+01	4.96000E-03	6.77000E-05	1.16555E-02
1.9100E+02	1.3934E+01	1.23600E-02	1.06750E-04	3.63755E-02
1.9300E+02	1.3640E+01	1.18600E-02	1.04600E-04	6.00955E-02
1.9500E+02	1.3356E+01	6.46500E-03	7.72500E-05	7.30255E-02
1.9700E+02	1.3080E+01	3.73500E-03	5.87500E-05	8.04955E-02
1.9900E+02	1.2813E+01	2.61600E-03	4.92150E-05	8.57275E-02
2.0100E+02	1.2554E+01	2.23400E-03	4.55000E-05	9.01955E-02
2.0300E+02	1.2303E+01	2.02350E-03	4.33150E-05	9.42425E-02
2.0500E+02	1.2060E+01	1.67500E-03	3.94350E-05	9.75925E-02
2.0700E+02	1.1824E+01	1.44250E-03	3.66150E-05	1.00477E-01
2.0900E+02	1.1594E+01	1.29900E-03	3.47700E-05	1.03075E-01
2.1100E+02	1.1371E+01	1.07800E-03	3.17100E-05	1.05231E-01
2.1300E+02	1.1155E+01	9.12500E-04	2.92050E-05	1.07056E-01
2.1500E+02	1.0945E+01	9.13500E-04	2.92200E-05	1.08883E-01
2.1700E+02	1.0741E+01	8.16500E-04	2.76450E-05	1.10516E-01
2.1900E+02	1.0542E+01	7.02500E-04	2.56800E-05	1.11921E-01
2.2100E+02	1.0349E+01	6.90500E-04	2.54600E-05	1.13302E-01
2.2300E+02	1.0161E+01	6.02000E-04	2.38050E-05	1.14506E-01
2.2500E+02	9.9785E+00	5.23000E-04	2.22250E-05	1.15552E-01
2.2700E+02	9.8007E+00	5.19500E-04	2.21550E-05	1.16591E-01
2.2900E+02	9.6276E+00	5.21500E-04	2.21950E-05	1.17634E-01
2.3100E+02	9.4591E+00	5.69000E-04	2.31650E-05	1.18772E-01
2.3300E+02	9.2950E+00	5.64000E-04	2.30600E-05	1.19900E-01
2.3500E+02	9.1351E+00	6.08000E-04	2.39250E-05	1.21116E-01
2.3700E+02	8.9794E+00	5.36000E-04	2.24900E-05	1.22188E-01
2.3900E+02	8.8276E+00	5.27000E-04	2.23100E-05	1.23242E-01
2.4100E+02	8.6797E+00	5.33500E-04	2.24400E-05	1.24309E-01
2.4300E+02	8.5355E+00	5.41500E-04	2.26050E-05	1.25392E-01
2.4500E+02	8.3948E+00	4.82200E-04	2.13650E-05	1.26357E-01
2.4700E+02	8.2576E+00	4.56250E-04	2.08000E-05	1.27269E-01
2.4900E+02	8.1238E+00	4.43850E-04	2.05200E-05	1.28157E-01
2.5100E+02	7.9932E+00	4.96100E-04	2.16500E-05	1.29149E-01
2.5300E+02	7.8657E+00	5.60000E-04	2.29750E-05	1.30269E-01
2.5500E+02	7.7413E+00	7.06500E-04	2.57550E-05	1.31682E-01
2.5700E+02	7.6198E+00	7.13000E-04	2.59600E-05	1.33118E-01
2.5900E+02	7.5012E+00	7.09500E-04	2.58000E-05	1.34537E-01
2.6100E+02	7.3853E+00	6.90500E-04	2.54600E-05	1.35918E-01
2.6300E+02	7.2721E+00	7.63500E-04	2.67500E-05	1.37445E-01
2.6500E+02	7.1615E+00	8.01500E-04	2.74000E-05	1.39048E-01
2.6700E+02	7.0534E+00	8.30500E-04	2.78750E-05	1.40709E-01
2.6900E+02	6.9478E+00	8.06500E-04	2.74800E-05	1.42322E-01
2.7100E+02	6.8445E+00	8.79500E-04	2.86800E-05	1.44081E-01
2.7300E+02	6.7435E+00	8.64000E-04	2.84250E-05	1.45809E-01

2.7500E+02	6.6447E+00	8.58500E-04	2.83400E-05	1.47526E-01
2.7700E+02	6.5481E+00	9.09500E-04	2.91500E-05	1.49345E-01
2.7900E+02	6.4536E+00	8.11500E-04	2.75600E-05	1.50968E-01
2.8100E+02	6.3611E+00	7.95500E-04	2.73000E-05	1.52559E-01
2.8300E+02	6.2706E+00	8.39500E-04	2.80250E-05	1.54238E-01
2.8500E+02	6.1821E+00	7.76000E-04	2.69700E-05	1.55790E-01
2.8700E+02	6.0954E+00	8.30500E-04	2.78800E-05	1.57451E-01
2.8900E+02	6.0105E+00	6.96000E-04	2.55600E-05	1.58843E-01
2.9100E+02	5.9274E+00	6.62000E-04	2.49450E-05	1.60167E-01
2.9300E+02	5.8460E+00	7.33500E-04	2.62300E-05	1.61634E-01
2.9500E+02	5.7662E+00	6.72000E-04	2.51250E-05	1.62978E-01
2.9700E+02	5.6881E+00	6.53000E-04	2.47750E-05	1.64284E-01
2.9900E+02	5.6116E+00	6.21500E-04	2.41850E-05	1.65527E-01
3.0100E+02	5.5366E+00	6.65000E-04	2.50300E-05	1.66857E-01
3.0300E+02	5.4631E+00	7.63000E-04	2.67400E-05	1.68383E-01
3.0500E+02	5.3911E+00	7.72000E-04	2.68950E-05	1.69927E-01
3.0700E+02	5.3205E+00	7.69500E-04	2.68550E-05	1.71466E-01
3.0900E+02	5.2513E+00	7.59500E-04	2.66800E-05	1.72985E-01
3.1100E+02	5.1834E+00	6.75000E-04	2.51750E-05	1.74335E-01
3.1300E+02	5.1168E+00	6.59500E-04	2.48950E-05	1.75654E-01
3.1500E+02	5.0515E+00	6.82000E-04	2.53100E-05	1.77018E-01
3.1700E+02	4.9875E+00	6.67500E-04	2.50400E-05	1.78353E-01
3.1900E+02	4.9246E+00	6.78000E-04	2.52400E-05	1.79709E-01
3.2100E+02	4.8630E+00	6.63000E-04	2.49550E-05	1.81035E-01
3.2300E+02	4.8025E+00	6.50500E-04	2.47350E-05	1.82336E-01
3.2500E+02	4.7431E+00	6.92500E-04	2.55000E-05	1.83721E-01
3.2700E+02	4.6848E+00	7.42000E-04	2.63800E-05	1.85205E-01
3.2900E+02	4.6276E+00	6.75500E-04	2.51900E-05	1.86556E-01
3.3100E+02	4.5715E+00	6.57500E-04	2.48600E-05	1.87871E-01
3.3300E+02	4.5163E+00	6.02500E-04	2.38200E-05	1.89076E-01
3.3500E+02	4.4622E+00	5.56500E-04	2.29150E-05	1.90189E-01
3.3700E+02	4.4090E+00	5.66000E-04	2.31000E-05	1.91321E-01
3.3900E+02	4.3568E+00	5.23500E-04	2.22400E-05	1.92368E-01
3.4100E+02	4.3055E+00	5.53500E-04	2.28500E-05	1.93475E-01
3.4300E+02	4.2551E+00	5.37500E-04	2.25250E-05	1.94550E-01
3.4500E+02	4.2055E+00	5.12500E-04	2.20100E-05	1.95575E-01
3.4700E+02	4.1569E+00	5.78000E-04	2.33400E-05	1.96731E-01
3.4900E+02	4.1091E+00	6.17500E-04	2.41050E-05	1.97966E-01
3.5100E+02	4.0621E+00	6.06000E-04	2.38800E-05	1.99178E-01
3.5300E+02	4.0159E+00	5.99000E-04	2.37500E-05	2.00376E-01
3.5500E+02	3.9705E+00	5.48500E-04	2.27500E-05	2.01473E-01
3.5700E+02	3.9258E+00	5.78000E-04	2.33400E-05	2.02629E-01
3.5900E+02	3.8819E+00	5.39500E-04	2.25700E-05	2.03708E-01
3.6100E+02	3.8388E+00	4.97550E-04	2.16950E-05	2.04703E-01
3.6300E+02	3.7963E+00	5.01000E-04	2.17600E-05	2.05705E-01
3.6500E+02	3.7546E+00	4.55000E-04	2.07700E-05	2.06615E-01
3.6700E+02	3.7135E+00	4.11950E-04	1.97950E-05	2.07439E-01
3.6900E+02	3.6732E+00	4.20650E-04	1.99950E-05	2.08281E-01

3.7100E+02	3.6334E+00	3.91950E-04	1.93200E-05	2.09064E-01
3.7300E+02	3.5944E+00	3.97850E-04	1.94600E-05	2.09860E-01
3.7500E+02	3.5559E+00	3.94050E-04	1.93700E-05	2.10648E-01
3.7700E+02	3.5181E+00	3.64700E-04	1.86600E-05	2.11378E-01
3.7900E+02	3.4808E+00	3.92750E-04	1.93400E-05	2.12163E-01
3.8100E+02	3.4442E+00	3.28700E-04	1.77500E-05	2.12821E-01
3.8300E+02	3.4081E+00	3.49600E-04	1.82850E-05	2.13520E-01
3.8500E+02	3.3726E+00	3.80550E-04	1.90500E-05	2.14281E-01
3.8700E+02	3.3376E+00	3.92650E-04	1.93400E-05	2.15066E-01
3.8900E+02	3.3032E+00	3.54800E-04	1.84150E-05	2.15776E-01
3.9100E+02	3.2693E+00	3.54300E-04	1.84000E-05	2.16484E-01
3.9300E+02	3.2360E+00	4.06200E-04	1.96600E-05	2.17297E-01
3.9500E+02	3.2031E+00	4.11350E-04	1.97800E-05	2.18119E-01
3.9700E+02	3.1708E+00	4.42000E-04	2.04800E-05	2.19003E-01
3.9900E+02	3.1389E+00	4.89650E-04	2.15250E-05	2.19983E-01
4.0100E+02	3.1075E+00	4.56600E-04	2.08050E-05	2.20896E-01
4.0300E+02	3.0766E+00	5.11500E-04	2.19900E-05	2.21919E-01
4.0500E+02	3.0461E+00	4.84250E-04	2.14100E-05	2.22887E-01
4.0700E+02	3.0161E+00	5.77000E-04	2.33200E-05	2.24041E-01
4.0900E+02	2.9866E+00	5.54500E-04	2.28700E-05	2.25150E-01
4.1100E+02	2.9574E+00	6.32500E-04	2.43900E-05	2.26415E-01
4.1300E+02	2.9287E+00	5.99500E-04	2.37650E-05	2.27614E-01
4.1500E+02	2.9004E+00	5.69000E-04	2.31600E-05	2.28752E-01
4.1700E+02	2.8726E+00	5.86500E-04	2.35100E-05	2.29925E-01
4.1900E+02	2.8451E+00	5.54500E-04	2.28700E-05	2.31034E-01
4.2100E+02	2.8180E+00	5.96500E-04	2.37050E-05	2.32227E-01
4.2300E+02	2.7913E+00	5.66500E-04	2.31150E-05	2.33360E-01
4.2500E+02	2.7650E+00	5.35500E-04	2.24850E-05	2.34431E-01
4.2700E+02	2.7390E+00	5.70000E-04	2.31750E-05	2.35571E-01
4.2900E+02	2.7134E+00	5.76500E-04	2.33100E-05	2.36724E-01
4.3100E+02	2.6882E+00	6.29000E-04	2.43250E-05	2.37982E-01
4.3300E+02	2.6633E+00	7.31500E-04	2.61950E-05	2.39445E-01
4.3500E+02	2.6388E+00	8.00500E-04	2.73800E-05	2.41046E-01
4.3700E+02	2.6146E+00	7.04500E-04	2.57200E-05	2.42455E-01
4.3900E+02	2.5907E+00	6.06000E-04	2.38900E-05	2.43667E-01
4.4100E+02	2.5672E+00	5.99500E-04	2.37600E-05	2.44866E-01
4.4300E+02	2.5439E+00	5.98500E-04	2.37450E-05	2.46063E-01
4.4500E+02	2.5210E+00	5.87500E-04	2.35250E-05	2.47238E-01
4.4700E+02	2.4984E+00	5.82000E-04	2.34150E-05	2.48402E-01
4.4900E+02	2.4761E+00	6.07000E-04	2.39100E-05	2.49616E-01
4.5100E+02	2.4541E+00	5.74000E-04	2.32600E-05	2.50764E-01
4.5300E+02	2.4324E+00	5.58500E-04	2.29500E-05	2.51881E-01
4.5500E+02	2.4110E+00	5.89500E-04	2.35650E-05	2.53060E-01
4.5700E+02	2.3899E+00	6.17000E-04	2.40950E-05	2.54294E-01
4.5900E+02	2.3690E+00	6.56000E-04	2.48250E-05	2.55606E-01
4.6100E+02	2.3484E+00	7.09500E-04	2.58050E-05	2.57025E-01
4.6300E+02	2.3281E+00	6.68000E-04	2.50550E-05	2.58361E-01
4.6500E+02	2.3080E+00	6.83500E-04	2.53350E-05	2.59728E-01

4.6700E+02	2.2882E+00	6.86000E-04	2.53750E-05	2.61100E-01
4.6900E+02	2.2687E+00	6.69000E-04	2.50700E-05	2.62438E-01
4.7100E+02	2.2494E+00	6.51500E-04	2.47450E-05	2.63741E-01
4.7300E+02	2.2304E+00	6.22500E-04	2.41950E-05	2.64986E-01
4.7500E+02	2.2115E+00	5.57500E-04	2.29250E-05	2.66101E-01
4.7700E+02	2.1930E+00	5.20500E-04	2.21700E-05	2.67142E-01
4.7900E+02	2.1746E+00	5.16000E-04	2.20800E-05	2.68174E-01
4.8100E+02	2.1565E+00	4.68450E-04	2.10650E-05	2.69111E-01
4.8300E+02	2.1386E+00	4.73550E-04	2.11800E-05	2.70058E-01
4.8500E+02	2.1210E+00	4.19600E-04	1.99700E-05	2.70898E-01
4.8700E+02	2.1035E+00	3.97100E-04	1.94450E-05	2.71692E-01
4.8900E+02	2.0863E+00	3.99350E-04	1.95000E-05	2.72491E-01

Distribution

LLL, Internal Distribution

A. C. Haussman
F. S. Eby
J. M. Ferguson
E. Goldberg
W. Grayson
W. Talley
L. F. Hansen 5
R. Howerton
H. Kruger
B. Pereira 5
J. Anderson
P. H. Moulthrop
E. F. Plechaty
W. M. Webster
P. Brown
J. L. Kammerdiener
C. Logan
B. Pohl
C. Wong
J. D. Lee
W. B. Myers
K. Fowler/B. Hooper
LBL Library
TID File 57

External Distribution

D. C. Kaul 5
Defense Atomic Support Agency
Washington, D. C.

G. D. Sauter
University of California
Davis, California

E. Straker
R. J. Harris
Science Applications, Inc.
La Jolla, Calif.

E. Banks
Nuclear Effects Laboratory
Edgewood Arsenal, Maryland

J. Cashwell
R. F. Taschek
L. Stewart
B. C. Diven
R. B. Lazarus
D. G. Foster, Jr.
T. Hirons
D. Harris
P. G. Young
Los Alamos Scientific Laboratory
Los Alamos, New Mexico

E. Oblow
H. Goldstein
Columbia University
New York, New York

Defense Documentation Center 12
Cameron Station
Alexandria, Virginia

APSI
APTL 2
RARP
Defense Nuclear Agency
Washington, D.C.

E.O. Baicy
A. Temperley
Aberdeen Research and
Development Center
Aberdeen Proving Ground, Maryland

Technical Reports Librarian
Naval Postgraduate School
Monterey, California

Library AFIT(LD)
AF Institute of Technology, AU
Wright-Patterson AFB, Ohio

DOGL, Technical Library
AF Weapons Laboratory, AFSC
Kirtland AFB, New Mexico

W. E. Tucker
Texas Nuclear Corporation
Austin, Texas

F. Perey
F.R. Mynatt
Union Carbide Corporation
Oak Ridge, Tennessee

Gulf Oil Corporation
San Diego, California

H. Steinberg
Mathematical Applications Group, Inc.
White Plains, New York

S. Pearlstein
M. K. Drake
Brookhaven National Laboratory
Upton, Long Island, New York

R. A. Dannels
Westinghouse Electric Corp.
Pittsburgh, Pennsylvania

External Distribution (Continued)

D. Eccleshall
Nuclear Defense Laboratory
U. S. Army
Edgewood Arsenal, Maryland

J. N. Rogers
Sandia Laboratories
Livermore, California

Roland Herbst
R & D Associates
Santa Monica, California

P. W. McDaniel
M. Shaw
M. Klein
G. A. Kolstad
U. S. Atomic Energy Commission
Washington, D. C.

R. O. Lane
Ohio University
Athens, Ohio

P. Persiani
R. Avery
A. B. Smith
Argonne National Laboratory
Argonne, Illinois

T. D. Jones
F. D. Maienschein
J. Gibbons
G. W. Morrison
Oak Ridge National Laboratory
Oak Ridge, Tennessee

F. H. Shelton
J. R. Keith
Kaman Nuclear
Colorado Springs, Colorado

F. Feiner
Knolls Atomic Power Laboratory
Schenectady, New York

H. Alter
Atomics International
Canoga Park, California

O. Simpson
Idaho Nuclear Corporation
Idaho Falls, Idaho

P. Greebler
General Electric Corporation
Sunnyvale, Calif.

R. Block
Rensselaer Polytechnic Inst.
Troy, New York

W. W. Havens, Jr.
Columbia University
New York, New York

I. L. Morgan
University of Texas
Austin, Texas

L. M. Branscomb
National Bureau of Standards
Washington, D. C.

W. G. Davey
Argonne National Laboratory
Idaho Falls, Idaho

M. H. Kalos
New York University
New York, New York

NOTICE

"This report was prepared as an account of work sponsored by the United States Government. Neither the United States nor the United States Atomic Energy Commission, nor any of their employees, nor any of their contractors, subcontractors, or their employees, makes any warranty, express or implied, or assumes any legal liability or responsibility for the accuracy, completeness or usefulness of any information, apparatus, product or process disclosed, or represents that its use would not infringe privately-owned rights."

VRM/dh/lp